TOWN OF SMYRNA

TOWN COUNCIL MEETING

AGENDA

To be placed under Smyrna Town Council Citizen Comments, an individual must fill out the online form, call or email the Town Clerk's office before 4:30 PM on the business day before the Council meeting and request to be placed under Citizen Comments; provide his or her name, address and telephone number; and state the purpose of addressing the Council.

Speakers are limited to 3 minutes. Additional comments may be submitted in writing

July 14, 2026 **5:00 PM** **Smyrna Town Hall**

1. Call to Order

Prayer: Smyrna Police Department Chaplain Tim York

Pledge of Allegiance: Assistant Town Manager, Todd Spearman

2. Roll Call

3. Approval or Correction of Minutes

June 9, 2026, regular meeting, the June 25, 2026, special-called meeting, and the June 25, 2026, workshop meeting of the Town Council.

4. Presentations, Awards and Recognitions

Ryan LeMasters, Chief Executive Officer - Tristar StoneCrest Medical Center

5. Consent Agenda

Note: Consent Agenda items will be those items determined by the Town Manager to be routine matters not necessitating discussion. All Consent Agenda items may be voted upon simultaneously pursuant to a single motion. There will be no separate discussion of these items unless a member of the Town Council requests that discussion be held, in which case the item will be removed from the Consent Agenda and considered separately. Following passage of the remaining Consent Agenda items, discussion of any items removed from the Consent Agenda shall be held and separate motions and votes shall be taken for each of the items removed.

a. Approval of the terms of, and authorization for the Mayor to execute, a contract with FirstDue for purchase of a record management system.

b. Approval of the terms of, and authorization for the Mayor to execute, contracts with vendors related to the annual bid of materials for Gas, Water & Sewer.

c. Approval of the terms of, and authorization for the Mayor to execute, Final Change Order #1 for the Golf Course Water Line Project.

d. Approval of the terms of, and authorization for the Mayor to execute, a contract amendment with SEC, Inc relative to Stewart's Creek gravity design.

e. Approval of the terms of, and authorization for the Mayor to execute, a contract with Icon Custom Masonry, Inc. for construction of two monument signs to be installed along Lowry Street (SR-1).

f. Approval of the terms of, and authorization for the Mayor to execute, a time extension request for Lowry Street Phase II (PIN 129837).

g. Approval of the terms of, and authorization for the Mayor to execute, a contract extension for Roadway Patching with Sessions Paving Company.

h. Approval of the terms of, and authorization for the Mayor to execute, a time extension with the Tennessee Department of Transportation (TDOT) for the Florence Road Sidewalks project to April 30, 2028.

i. Approval of the terms of, and authorization for the Mayor to execute, a one-year Professional Services Agreement with Rex Gaither for financial consulting services.

j. Approval of and authorization of a list of items to be auctioned through online surplus sale with GovDeals.

k. Approval of the terms of, and authorization for the Mayor to execute, a contract with the Greater Nashville Regional Council (GNRC) for transportation project planning services.

6. Old Business

a. **PUBLIC HEARING**: Consideration of an Ordinance amending Smyrna Municipal Code Title 20, Chapter 2, relative to the possession of firearms in town parks, as well as amendments to Title 11, Chapter 6, relative to the discharge of firearms while lawfully hunting.

b. **PUBLIC HEARING**: Consideration of an Ordinance amending the text of the Smyrna Municipal Zoning Ordinance Article III, Section 3.100 regarding detached accessory structures.

c. **PUBLIC HEARING**: Consideration of an Ordinance amending the text of the Smyrna Municipal Zoning Ordinance Article IV, Section 4.030 regarding mobile food vendors.

d. **PUBLIC HEARING**: Consideration of a Resolution relative to a Plan of Services for property located on Tax Map 26, Parcels 31.00 and 32.00.

e. **PUBLIC HEARING**: Consideration of an Ordinance relative to the annexation and C-2 and I-1 zoning of properties located on Tax Map 26, Parcels 31.00 and 32.00 requested by Hollingshead Land, LLC containing 70.08 acres. The properties are located at 4657 and 4665 W. Jefferson Pike. The request would

include the annexation of the existing right-of-way of W. Jefferson Pike/S.R. 266 from the existing Town limits eastward approximately 2,998 linear feet, as well as the existing right-of-way of McCormick Court from W. Jefferson Pike/S.R. 266 southward approximately 475 linear feet.

f. Consideration of a Resolution in Memorandum of Ordinance #26-34 relative to the annexation and C-2 and I-1 zoning of properties on Tax Map 26, Parcels 31.00 and 32.00 requested by Hollingshead Land, LLC.

7. New Business

a. Planning Commission Report

1. Consideration of an Ordinance relative to the rezoning of property located on Tax Map 49, Parcel 2.01 owned by Woods Properties containing 2 acres from R-1 to C-2. The property is located at 10510 Old Nashville Highway.

2. Consideration of an Ordinance relative to the rezoning of properties located on Tax Map 28M, Group G, Parcel 26.01, owned by Mitesh Patel; Parcel 28.00, owned by Shams Amraei and Rezvan Moosavi; Parcel 29.00, owned by Khairy Abdelmasih, Ebram Shalaby, Alaa Mankarious, & Eyd Toss; Parcel 30.00, owned by Paw Paw Enterprises, LLC; Parcels 31.00 and 33.00, owned by J & M Equity, LLC, from C-4 to C-2. In addition, Parcel 27.01, owned by Navarro Properties, LLC, has been requested to be rezoned from R-2 to C-2. The seven properties together total approximately 3.99 acres and are located on Old Nashville Highway northwest of the intersection with Enon Springs Road, West.

b. Consideration of a Resolution to approve funding for non-profit organizations for the fiscal year 2027.

c. Consideration of a Resolution authorizing the photographic or electronic preservation and subsequent disposal of permanent paper records of the Town of Smyrna.

8. Public Comment

Note: The Town's Public Comment Period shall be reserved for those citizens that have signed up to address the Town Council, or a Board or Committee, at least twenty-four (24) hours in advance of the meeting, pursuant to the Town's Public Comment Policy as outlined above.

9. Other

Approval of Self-Insured Retention payment relative to Claim Number 26524N242572.

10. Status Reports

May State Shared and Local Sales Tax

11. Correspondence & Announcements

12. Adjournment

TOWN OF SMYRNA

TOWN COUNCIL MEETING

MINUTES

June 9, 2026 **5:00 PM**

Smyrna Town Hall

1. Call to Order

Mayor Reed called the meeting to order at 05:12 PM.

Prayer: Smyrna Police Department Chaplain, Tim York

The Invocation was led by Smyrna Police Department Chaplain, Tim York.

Pledge of Allegiance: Assistant Town Manager, Todd Spearman

The Pledge of Allegiance was led by Assistant Town Manager, Todd Spearman.

2. Roll Call

The roll was called by the Town Clerk and the following Town Council Members were present: Council Member Gerry Short, Council Member Racquel Peebles, Council Member Steve Sullivan, Council Member HG Cole, Council Member Jerome Dempsey, Vice-Mayor Marc Adkins, and Mayor Mary Esther Reed.

3. Approval or Correction of Minutes

May 12, 2026, regular meeting and the May 28, 2026, workshop meeting of the Town Council.

Following a review of the minutes of the May 12, 2026, regular meeting and the May 28, 2026, workshop meeting of the Town Council, Vice-Mayor Marc Adkins made a motion to approve the minutes; the motion was duly seconded by Council Member Steve Sullivan. The motion was approved 7-0.

4. Awards and Recognitions

There were no awards or recognitions at this time.

5. Consent Agenda

The following Consent Agenda items were next presented for consideration by the Town Council. Following discussion, it was requested that Item "j" be pulled and discussed individually. Mayor Reed pulled Item "j" and a motion was made by Vice-Mayor Marc Adkins to approve the remaining Consent Agenda items. Council Member Steve Sullivan seconded the motion to approve the remaining Consent Agenda items. Said motion was approved 7-0.

Consent Agenda item "j" was discussed individually. Following discussion, Council

Member Steve Sullivan made a motion to approve said item. Council Member Gerry Short seconded the motion. Said motion to approve Consent Agenda item "j" was approved 5-2, with Council Members Jerome Dempsey and Racquel Peebles voting against Consent Agenda item "j."

A copy of said documents referenced on the Consent Agenda are attached hereto and incorporated herein by reference as if set forth at length verbatim as Exhibit “1”.

5.a. Approval of the terms of, and authorization for the Mayor to execute, a contract with the Tennessee Department of Finance and Administration, Strategic Technology Solutions Division (STS) to accept the Fiscal Year 2024 (Year 3) DHS State and Local Cybersecurity Grant Award.

5.b. Approval of the terms of, and authorization for the Mayor to execute, a contract with Leidos Dynetics, Defense Sensors, the State of Tennessee approved vendor for Network Penetration Testing Services.

5.c. Approval of the terms of, and authorization for the Mayor to execute, a contract with S2K Consulting for telephone line audit services.

5.d. Approval of the terms of, and authorization for the Mayor to execute, a contract with Turner Security for the purchase and installation of security cameras at Lee Victory Park.

5.e. Approval of the terms of, and authorization for the Mayor to execute, a contract with Chris Whitaker Construction to replace the metal roof and add wood decking to the Hilltop-Rosenwald Park picnic shelter.

5.f. Approval of the terms of, and authorization for the Mayor to execute, an annual contract with Rollins Excavating for concrete work.

5.g. Approval of the terms of, and authorization for the Mayor to execute, a contract with S&W Contracting to replace the existing traffic cabinet at the intersection of Sam Ridley and Weakly Lane.

5.h. Approval of the terms of, and authorization for the Mayor to execute, a time extension with TDOT for PIN 125507 (ITS Phases 3, 4, 5) to February 28, 2027, to complete the project and submit all close-out documentation.

5.i. Approval of the terms of, and authorization for the Mayor to execute, a contract with TLC Pro Roofing to install a spray on rubber membrane over the existing roof at the Building and Grounds Maintenance Shop.

5.j. Approval of the terms of and authorization for the Mayor to approve the purchase of two single-person brush trucks.

5.k. Approval of the terms of, and authorization for the Mayor to execute, an agreement with Bush Construction relative to gas construction.

5.l. Approval of the terms of, and authorization for the Mayor to execute, an agreement with BH Holmes relative to the Emergency Water Line Replacement contract.

5.m. Approval of the terms of, and authorization for the Mayor to execute, a contract with Industrial Facilities Solutions to conduct work needed by

the Water Plant and Wastewater Plant.

5.n. Approval of the terms of, and authorization for the Mayor to execute, the water treatment chemical contracts for the Water Plant for fiscal 2026-2027.

5.o. Approval of the contract terms of, and authorization for the Mayor to execute, a contract extension with DRT for lagoon sludge removal at the Water Plant.

5.p. Approval of the terms of, and authorization for the Mayor to execute, a contract extension with chemical vendors for the Water and Wastewater Treatment Plants for fiscal year 2026-2027.

5.q. Approval of the terms of, and authorization for the Mayor to execute, a contract with Safe Industries for the Fire Department Apparatus service.

6. Old Business

6.a. PUBLIC HEARING: Consideration of an Ordinance updating Municipal Code Title 7: Fire Protection and Fireworks, Chapter 5: Open Burning, Subsections 7-501—7-509.

The Town Council next considered on second and final reading an Ordinance updating Municipal Code Title 7: Fire Protection and Fireworks, Chapter 5: Open Burning, Subsections 7-501—7-509.

At this time, Mayor Reed recessed the meeting without objection, and a public hearing was opened related to the agenda item. No citizens spoke relative to this agenda item. At this time, the public hearing was closed without objection, and the Council meeting was resumed.

Following discussion, Council Member Jerome Dempsey made a motion to approve the Ordinance on second and final reading; the motion was duly seconded by Vice-Mayor Marc Adkins. After further discussion, the motion was approved 7-0.

A copy of said Ordinance, as approved on second and final reading, is attached hereto and incorporated herein by reference as if set forth at length verbatim as Exhibit “2.” (Ordinance #26-24)

6.b. PUBLIC HEARING: Consideration of an Ordinance adopting the budget for fiscal year 2026-2027.

The Town Council next considered on second and final reading an Ordinance adopting the budget for fiscal year 2026-2027.

At this time, Mayor Reed recessed the meeting without objection, and a public hearing was opened related to the agenda item. No citizens spoke relative to this agenda item. At this time, the public hearing was closed without objection, and the Council meeting was resumed.

Following discussion, Vice-Mayor Marc Adkins made a motion to approve the

Ordinance on second and final reading; the motion was duly seconded by Council Member Steve Sullivan. After further discussion, the motion was approved 7-0.

A copy of said Ordinance, as approved on second and final reading, is attached hereto and incorporated herein by reference as if set forth at length verbatim as Exhibit “3.” (Ordinance #26-26)

6.c. PUBLIC HEARING: Consideration of an Ordinance adopting the property tax rate for fiscal year 2026-2027.

The Town Council next considered on second and final reading an Ordinance adopting the property tax rate for fiscal year 2026-2027.

At this time, Mayor Reed recessed the meeting without objection, and a public hearing was opened related to the agenda item. Smyrna citizen, Dan Epright, addressed the council relative to this agenda item. At this time, the public hearing was closed without objection, and the Council meeting was resumed.

Following discussion, Vice-Mayor Marc Adkins made a motion to approve the Ordinance setting the property tax rate at .5257 on second and final reading with the caveat that there may be an amendment warranted once the final number is received from the State Board of Equalization office, in order to adjust the town's rate to be revenue neutral; the motion was duly seconded by Council Member Jerome Dempsey. After further discussion, the motion was approved 7-0. A special-called meeting will be held on June 25, 2026, prior to the workshop, in order to make any necessary amendments to the property tax rate Ordinance as approved.

A copy of said Ordinance, as approved on second and final reading, is attached hereto and incorporated herein by reference as if set forth at length verbatim as Exhibit “4.” (Ordinance #26-27)

6.d. PUBLIC HEARING: Consideration of an Ordinance adjusting the pay for the Town Court Clerk.

The Town Council next considered on second and final reading an Ordinance adjusting the pay for the Town Court Clerk.

At this time, Mayor Reed recessed the meeting without objection, and a public hearing was opened related to the agenda item. No citizens spoke relative to this agenda item. At this time, the public hearing was closed without objection, and the Council meeting was resumed.

Following discussion, Council Member Gerry Short made a motion to approve the Ordinance on second and final reading; the motion was duly seconded by Vice-Mayor Marc Adkins. After further discussion, the motion was approved 7-0.

A copy of said Ordinance, as approved on second and final reading, is attached hereto and incorporated herein by reference as if set forth at length verbatim as Exhibit “5.”

(Ordinance #26-28)

6.e. <u>PUBLIC HEARING</u>: Consideration of an Ordinance amending the text of the Smyrna Municipal Zoning Ordinance Article III, Section 3.180 regarding fences in residential districts.

The Town Council next considered on second and final reading an Ordinance amending the text of the Smyrna Municipal Zoning Ordinance Article III, Section 3.180 regarding fences in residential districts. The Planning Commission reviewed and recommended approval of this item.

At this time, Mayor Reed recessed the meeting without objection, and a public hearing was opened related to the agenda item. No citizens spoke relative to this agenda item. At this time, the public hearing was closed without objection, and the Council meeting was resumed.

Following discussion, Council Member Steve Sullivan made a motion to approve the Ordinance on second and final reading; the motion was duly seconded by Vice-Mayor Marc Adkins. After further discussion, the motion was approved 7-0.

A copy of said Ordinance, as approved on second and final reading, is attached hereto and incorporated herein by reference as if set forth at length verbatim as Exhibit "6." (Ordinance #26-30)

6.f. <u>PUBLIC HEARING</u>: Consideration of an Ordinance relative to the rezoning of property located on Tax Map 28, part of Parcel 12.02 from C-2 to PCD requested by SEC, Inc. on behalf of CSC Properties, LLC. The property requested to be rezoned contains approximately 2.21 acres and is located on Lee Victory Parkway.

The Town Council next considered on second and final reading an Ordinance relative to the rezoning of property located on Tax Map 28, part of Parcel 12.02 from C-2 to PCD requested by SEC, Inc. on behalf of CSC Properties, LLC. The property requested to be rezoned contains approximately 2.21 acres and is located on Lee Victory Parkway. The Planning Commission reviewed and recommended approval of this item with three conditions:

1. The proposed building elevation on Lot 1 does not meet Design Review and is required to be revised to meet Design Review.
2. The entire property is in the 100-year floodplain. A floodplain development permit application is required to be submitted as a part of the grading permit application.
3. The signal warrant analysis shows that a traffic signal is warranted at the intersection of the private drive and Lee Victory Parkway. This signal is required to be installed, pending approval by TDOT.

At this time, Mayor Reed recessed the meeting without objection, and a public hearing was opened related to the agenda item. No citizens spoke relative to this agenda item. At this time, the public hearing was closed without objection, and the Council meeting was resumed.

Following discussion, Vice-Mayor Marc Adkins made a motion to approve the Ordinance on second and final reading; the motion was duly seconded by Council Member Gerry Short. After further discussion, the motion was approved 6-1, with Council Member Racquel Peebles voting against said item.

A copy of said Ordinance, as approved on second and final reading, is attached hereto and incorporated herein by reference as if set forth at length verbatim as Exhibit "7." (Ordinance #26-15)

6.g. PUBLIC HEARING: Consideration of a Resolution relative to a Plan of Services for property located on Tax Map 50, Parcel 13.02.

The Town Council next considered a Resolution for Plan of Services for properties located on Tax Map 50, Parcel 13.02. The recommendation of the Planning Commission was that the Plan of Services be approved.

At this time, Mayor Reed recessed the meeting without objection, and a public hearing was opened related to the agenda item. No citizens spoke relative to this agenda item. At this time, the public hearing was closed without objection, and the Council meeting was resumed.

Following discussion, Council Member Steve Sullivan made a motion to approve the Resolution for Plan of Services. The motion was duly seconded by Vice-Mayor Marc Adkins. After further discussion, the motion was approved 7-0.

A copy of said Resolution for Plan of Services, as approved, is attached hereto and incorporated herein by reference as if set forth at length verbatim as Exhibit "8." (Resolution #26-5)

6.h. PUBLIC HEARING: Consideration of an Ordinance relative to the annexation and I-2 zoning of property on Tax Map 50, Parcel 13.02 requested by Smyrna River of Life Assembly of God containing 54.5 acres. The property is located at 8200 Safari Drive.

The Town Council next considered on second and final reading an Ordinance relative to the annexation and I-2 zoning of property on Tax Map 50, Parcel 13.02 requested by Smyrna River of Life Assembly of God containing 54.5 acres. The property is located at 8200 Safari Drive. The Planning Commission reviewed and recommended approval of this item.

At this time, Mayor Reed recessed the meeting without objection, and a public hearing was opened related to the agenda item. Citizen, Lee Chaffin, 907 Avery Valley Drive, addressed the council relative to this agenda item. At this time, the public hearing was closed without objection, and the Council meeting was resumed.

Following discussion, Council Member HG Cole made a motion to approve the Ordinance on second and final reading; the motion was duly seconded by Vice-Mayor

Marc Adkins. After further discussion, the motion was approved 7-0.

A copy of said Ordinance, as approved on second and final reading, is attached hereto and incorporated herein by reference as if set forth at length verbatim as Exhibit "9." (Ordinance #26-29)

6.i. Consideration of a Resolution in Memorandum of Ordinance #26-29 relative to the annexation and I-2 zoning of property located on Tax Map 50, Parcel 13.02.

The Town Council next considered a Resolution in Memorandum of Ordinance #26-29 relative to the annexation and I-2 zoning of property located on Tax Map 50, Parcel 13.02. Following discussion, Vice-Mayor Marc Adkins made a motion to approve the Resolution. The motion was duly seconded by Council Member Gerry Short. After further discussion, the motion was approved 7-0.

A copy of said Resolution, as approved, is attached hereto and incorporated herein by reference as if set forth at length verbatim as Exhibit "10." (Resolution #26-6)

7. New Business

7.a. Planning Commission Report:

7.a.1. Consideration of an Ordinance relative to the annexation and C-2 and I-1 zoning of properties located on Tax Map 26, Parcels 31.00 and 32.00 requested by Hollingshead Land, LLC containing 70.08 acres. The properties are located at 4657 and 4665 W. Jefferson Pike. The request would include the annexation of the existing right-of-way of W. Jefferson Pike/S.R. 266 from the existing Town limits eastward approximately 2,998 linear feet, as well as the existing right-of-way of McCormick Court from W. Jefferson Pike/S.R. 266 southward approximately 475 linear feet.

The Town Council next considered on first reading an Ordinance relative to the annexation and C-2 and I-1 zoning of properties located on Tax Map 26, Parcels 31.00 and 32.00 requested by Hollingshead Land, LLC containing 70.08 acres. The properties are located at 4657 and 4665 W. Jefferson Pike. The request would include the annexation of the existing right-of-way of W. Jefferson Pike/S.R. 266 from the existing Town limits eastward approximately 2,998 linear feet, as well as the existing right-of-way of McCormick Court from W. Jefferson Pike/S.R. 266 southward approximately 475 linear feet. The recommendation of the Planning Commission was that the request be approved with the requirement that truck traffic utilize McCormick Court for ingress/egress.

At this time, Council requested to hear from a representative of the property owners. Chris McGuire from Huddleston Steele addressed the council relative to the project.

Following discussion, Council Member Steve Sullivan made a motion to approve the Ordinance on first reading incorporating planning commission staff comments and including a request of the developer to provide certain information prior to the second and final reading, including but not limited to, elevations, line of sight, and traffic

improvement plans to include a potential deceleration lane. The motion was duly seconded by Vice-Mayor Marc Adkins. After further discussion, the motion was approved 6-1, with Council Member Racquel Peebles voting against said item.

A copy of said Ordinance, as approved on first reading, is attached hereto and incorporated herein by reference as if set forth at length verbatim as Exhibit "11." (Ordinance #26-34)

7.a.2. Consideration of an Ordinance relative to the rezoning of Tax Map 35, Parcel 88.00, for R-1 to PCD requested by Amba Builders, Inc. The property requested to be rezoned contains 4.04 acres and is located at 115 Rebel Road.

This item was withdrawn by the applicant prior to the meeting. No further action was needed at this time.

7.a.3. Consideration of an Ordinance relative to the rezoning of Tax Map 50E, Group E, Parcel 9.00, from R-1 to C-2 requested by Reda Boshra. The property requested to be rezoned contains approximately .95 acre and is located at 526 Almaville Road.

The Town Council next considered on first reading an Ordinance relative to the rezoning of Tax Map 50E, Group E, Parcel 9.00, from R-1 to C-2 requested by Reda Boshra. The property requested to be rezoned contains approximately .95 acre and is located at 526 Almaville Road. The recommendation of the Planning Commission was that the request be DENIED.

Following discussion, Vice-Mayor Marc Adkins made a motion to DENY the Ordinance on first reading. The motion to DENY was duly seconded by Council Member Gerry Short. After further discussion, the motion to DENY was approved 7-0.

7.a.4. Consideration of an Ordinance amending the text of the Smyrna Municipal Zoning Ordinance Article III, Section 3.100 regarding detached accessory structures.

The Town Council next considered on first reading an Ordinance amending the text of the Smyrna Municipal Zoning Ordinance Article III, Section 3.100 regarding detached accessory structures. The recommendation of the Planning Commission was that the request be approved.

Following discussion, Council Member Steve Sullivan made a motion to approve the Ordinance on first reading. The motion was duly seconded by Council Member Jerome Dempsey. After further discussion, the motion was approved 7-0.

A copy of said Ordinance, as approved on first reading, is attached hereto and incorporated herein by reference as if set forth at length verbatim as Exhibit "12." (Ordinance #26-32)

7.a.5. Consideration of an Ordinance amending the text of the Smyrna Municipal Zoning Ordinance Article IV, Section 4.030 regarding mobile

food vendors.

The Town Council next considered on first reading an Ordinance amending the text of the Smyrna Municipal Zoning Ordinance Article IV, Section 4.030 regarding mobile food vendors. The recommendation of the Planning Commission was that the request be approved.

Following discussion, Council Member HG Cole made a motion to approve the Ordinance on first reading. The motion was duly seconded by Council Member Jerome Dempsey. After further discussion, the motion was approved 7-0.

A copy of said Ordinance, as approved on first reading, is attached hereto and incorporated herein by reference as if set forth at length verbatim as Exhibit "13." (Ordinance #26-33)

7.b. Consideration and approval of the 2026-27 Classification and Compensation Plan.

The Town Council next considered approval of the 2026-27 Classification and Compensation Plan. Following discussion, Vice-Mayor Marc Adkins made a motion to approve the Ordinance on first reading. The motion was duly seconded by Council Member Jerome Dempsey. After further discussion, the motion was approved 7-0.

A copy of said Classification and Compensation Plan, as approved, is attached hereto and incorporated herein by reference as if set forth at length verbatim as Exhibit "14."

7.c. Consideration of an Ordinance amending Smyrna Municipal Code Title 20, Chapter 2, relative to the possession of firearms in town parks, as well as amendments to Title 11, Chapter 6, relative to the discharge of firearms while lawfully hunting.

The Town Council next considered on first reading an Ordinance amending Smyrna Municipal Code Title 20, Chapter 2, relative to the possession of firearms in town parks, as well as amendments to Title 11, Chapter 6, relative to the discharge of firearms while lawfully hunting.

Following discussion, Council Member Steve Sullivan made a motion to approve the Ordinance on first reading. The motion was duly seconded by Vice-Mayor Marc Adkins. After further discussion, the motion was approved 7-0.

A copy of said Ordinance, as approved on first reading, is attached hereto and incorporated herein by reference as if set forth at length verbatim as Exhibit "15." (Ordinance #26-31)

8. Public Comment

There was no public comment at this time.

9. Other

There was no other business before the council at this time.

10. Status Reports

April State Shared and Local Sales tax.

Director of Finance, Sierra Lowry, presented Council with April State Shared Tax and Local Sales Tax numbers.

11. Correspondence & Announcements

Next, Mayor Mary Esther Reed and other Council members, as well as Town Manager, David Santucci, recognized various Town employees for a job well done; spoke of various community events and also extended well-wishes, congratulations and condolences to various individuals.

12. Adjournment

Without objection, the meeting was adjourned at 7:22 PM.

Town of Smyrna, Tennessee

_____

Mary Esther Reed, Mayor

Attest:

_____

Amber Hobbs, Town Clerk

TOWN OF SMYRNA

TOWN COUNCIL
SPECIAL-CALLED MEETING

MINUTES

June 25, 2026 **5:00 PM**

Smyrna Town Hall

1. Call to Order

Mayor Reed called the meeting to order at 05:01 PM.

2. Roll Call

The roll was called by the Town Clerk and the following Town Council Members were present: Council Member HG Cole, Council Member Jerome Dempsey, Council Member Racquel Peebles, Council Member Steve Sullivan, and Mayor Mary Esther Reed.

3. Approval or Correction of Minutes

June 9, 2026, Special-Called Meeting of the Town Council.

Following a review of the Minutes of the June 9, 2026, special-called meeting, Council Member Jerome Dempsey made a motion to approve the minutes; the motion was duly seconded by Council Member Racquel Peebles. The motion was approved 5-0.

4. Old Business

4.a. PUBLIC HEARING: Consideration of the amendment of Ordinance #26-27 adopting the final, revenue-neutral property tax rate for Fiscal Year '26-'27.

The Town Council next considered the amendment of Ordinance #26-27 adopting the final, revenue-neutral property tax rate for Fiscal Year '26-'27.

At this time, Mayor Reed recessed the meeting without objection, and a public hearing was opened related to the agenda item. No citizens spoke relative to this agenda item. At this time, the public hearing was closed without objection, and the Council meeting was resumed.

Following discussion, Council Member Steve Sullivan made a motion to approve the amendment to Ordinance #26-27; the motion was duly seconded by Council Member Racquel Peebles. After further discussion, the motion was approved 5-0.

A copy of said Ordinance, as amended, is attached hereto and incorporated herein by reference as if set forth at length verbatim as Exhibit “1.” (Ordinance #26-27)

4.b. PUBLIC HEARING: Consideration of an Ordinance to approve year-end

budget amendments for Fiscal Year 2026.

The Town Council next considered on second and final reading an Ordinance to approve year-end budget amendments for Fiscal Year 2026.

At this time, Mayor Reed recessed the meeting without objection, and a public hearing was opened related to the agenda item. No citizens spoke relative to this agenda item. At this time, the public hearing was closed without objection, and the Council meeting was resumed.

Following discussion, Council Member Jerome Dempsey made a motion to approve the Ordinance on second and final reading; the motion was duly seconded by Council Member Steve Sullivan. After further discussion, the motion was approved 5-0.

A copy of said Ordinance, as approved on second and final reading, is attached hereto and incorporated herein by reference as if set forth at length verbatim as Exhibit "2." (Ordinance #26-25)

5. New Business

Approval of the terms of, and authorization for the Mayor to execute, a contract with the Greater Nashville Regional Council (GNRC) to model our existing roadway system and incorporate proposed traffic from approved residential developments in order to formulate a tentative schedule of anticipated intersection and roadway upgrades on the west side of I-24.

This item was pulled from the agenda at this time, but was requested by the Town Manager to be added to the regular Town Council meeting for July 14, 2026, if further information is received prior to the meeting.

6. Public Comment

There was no public comment at this time.

7. Adjournment

Without objection, the meeting was adjourned at 5:17 PM.

Town of Smyrna, Tennessee

_____

Mary Esther Reed, Mayor

Attest:

_____

Amber Hobbs, Town Clerk

MINUTES OF THE WORKSESSION OF THE TOWN COUNCIL OF THE TOWN OF SMYRNA ON JUNE 25, 2026

The Town Council of the Town of Smyrna, Rutherford County, Tennessee, met in a work session at 5:00 p.m. on June 25, 2026, at Town Hall to discuss various agenda items. Mayor Marty Esther Reed called the meeting to order at 5:18 p.m. following a special-called meeting immediately prior. The following Town Council Members were present:

H.G. Cole
Jerome Dempsey
Steve Sullivan
Racquel Peebles
Mayor Mary Esther Reed

Vice-Mayor Marc Adkins and Council Member Gerry Short were not present for this meeting. In addition to the members of the Town Council, various staff members, citizens and members of the media attended.

Following further discussion, without objection, the meeting was adjourned at 7:19 p.m.

TOWN OF SMYRNA, TENNESSEE

_____
MARY ESTHER REED, Mayor

ATTEST:

_____
AMBER HOBBS, Town Clerk

Town of Smyrna
Town Council Meeting
Agenda Summary

Agenda Item Number 5.a.
Department: Fire Department
Date: July 14, 2026

Subject:
Approval of the terms of, and authorization for the Mayor to execute, a contract with FirstDue for purchase of a record management system.

Fiscal Impact:
Phase I of the contract, which includes one-time configuration and implementation fees as well as a pro-rated service period, totals $22,867.00. This was budgeted in the FY-2027 Operating Budget under Contractual Services, line item 110-42200-290. The contract pricing reflected in the proposal includes a first-year implementation and pro-rated subscription cost of $22,867 and an annual subscription amount of $42,550 thereafter, subject to the contract terms.

Contract Type:
Original Contract

Contract Term (if applicable):
The contract pricing reflected in the proposal includes a first-year implementation and pro-rated subscription cost of $22,867 and an annual subscription amount of $42,550 thereafter, subject to the contract terms.

Background:
Over the past several months, Smyrna Fire Department staff conducted an extensive evaluation of multiple software vendors and platforms to identify the best long-term solution for the department's operational, reporting, planning, and administrative needs. This review included demonstrations, feature comparisons, implementation considerations, interoperability capabilities, and discussions with peer agencies. Following this process, FirstDue was identified as the platform that best meets the department's current and future operational requirements.

The proposed agreement includes implementation services as well as a pro-rated quote for services as part of Phase I implementation. The overall agreement provides for a four-year subscription term with implementation services beginning in Fiscal Year 2027.

An additional benefit of selecting First Due is that several neighboring Rutherford County fire and emergency service jurisdictions have already implemented the platform. Utilizing the same software solution will improve interoperability and facilitate the

seamless exchange of operational data, pre-incident planning information, response information, and other critical records between agencies during mutual aid incidents and regional emergency responses.

The Town's Information Technology Director has reviewed the proposed software platform, and has recommended proceeding with the implementation of First Due.

The Town Attorney has reviewed the agreement and all associated contract documents and has approved the contract as well.

Phase I and II of contract implementation, both to occur during FY-2027, totals $50,950.00. This will be funded through the approved FY-2027 budget divided between the Fire Department Operating Budget and the CIP.

Summary:
Phase I of the FirstDue implementation process is to begin upon implementation of the FY-2027 budget. Phase II will begin in the second quarter of FY-2027.

Recommended Council Action:
Staff recommends approval of the agreement with First Due and authorization for the Mayor to execute the contract documents necessary to implement the software platform for the Smyrna Fire Department.

Attachments:
1. First Due Agreement
2. Certificate of Vendor Signature Completion
3. First Due Quote
4. TOS Standard Addendum Signed by AM

Zoho Sign Document ID: 2AB7F2F4-EJXM4TEHAGBJFZ2GFBPOXFAFJBK5_JGGB6SCYUGEEW8

FIRST DUE



CLIENT NAME: Smyrna Fire Department (TN)

PREPARED BY: Kevin Mulligan

DATE: 06/15/2026

Zoho Sign Document ID: 2AB7F2F4-EJXM4TEHAGBJFZ2GFBPOXFAFJBK5_JGGB6SCYUGEEW8

390 NE 191st Street, Suite 17328, Miami, FL 33179 Phone: +1 (516) 874-2258 Website: https://www.firstdue.com/	Prepared By:	Kevin Mulligan
	Valid Until:	08/31/2026
	Quote Number:	1545132000504331928

Ship To: Smyrna Fire Department (TN) 145 S Lowry St, Smyrna, TN, 37167, United States	Bill To: Smyrna Fire Department (TN) 145 S Lowry St, Smyrna, TN, 37167, United States
Account:	Smyrna Fire Department (TN)
Effective Date:	Date on which the Quote is accepted by Customer
Subscription Start:	06/30/2026
Initial Term:	4
Annual Subscription ($):	$42,550.00 *This amount is not pro-rated.
Annual Pricing Adjustment:	5%
Payment Terms:	Net30

PRICING

Product Details
Occupancy Management & Pre-Incident Planning *Manage Occupancies, Pre-Incident Mapping, ArcGIS Maps, Fire Systems, Hazardous Material, and Contacts.*
Responder *Web Responder dashboard and Responder iOS/Android App with notifications, statusing and routing.*
Hydrant Management - Advanced *Manage Hydrants including hydrants visible on pre-plan & response map, hydrant list, hydrant types, hydrant uploads, ArcGIS hydrant layers, hydrant setup, hydrant service checklist, data management, mapping, service inspections, hydrant flow test and reporting.*
Inspections *Field Inspections, Configurable Checklists, Violation Management, Virtual Inspections, Inspections Scheduler, and Integrated Pre-Incident Planning.*
Investigations *Organize, analyze and document investigations, keeping case information secure and separated from, but integrated with other modules.*
Incident Reporting - Fire Incident Documentation *NFIRS Incident Documentation, State and Federal Compliance with automated submission.*
AI Enhanced Documentation: Fire Reporting *AI powered transcription and documentation solution to assist with completing NFIRS/NERIS reports.*
Incident Reporting - NFIRS EMS+ *Includes standard NFIRS EMS Module with additional fields for enhanced patient documentation. Fields include Treatments, Procedures, Medications, Vitals, Signature*
Scheduling *Manage staff schedules with an interactive shift board, configurable call shifts module, messaging, time-off and shift trades.*
Personnel Management *Store, Manage and Access Employee Records including demographic data, certifications and employment information.*
Basic Training Records *Assign Training, Record Completions, View Training Logs, and Manage Certifications.*
Events & Activities *Create Events, View Global Activity Log, and Access Global Calendar.*

Zoho Sign Document ID: 2AB7F2F4-EJXM4TEHAGBJFZ2GFBPOXFAFJBK5_JGGB6SCYUGEEW8

Product Details
Assets & Inventory *Assets, vehicles, equipment and inventory management, assets and equipment checks, and work order management.*
CAD Integration (Other) *Receive CAD Data to support First Due Responder and Incident Reporting modules via sFTP, XML, or API.*
Premium Online Training Package *Up to 8 Hours Online Training with certified First Due Instructor*
Implementation and Configuration Services *Services related to configuring and customizing the First Due Platform as described in the Statement of Work.*

One Time Fee Subtotal	$8,400.00
Subscription Fee Subtotal	$14,467.00
Tax	$0.00
Grand Total	**$22,867.00**

Zoho Sign Document ID: 2AB7F2F4-EJXM4TEHAGBJFZ2GFBPOXFAFJBK5_JGGB6SCYUGEEW8

Governing Terms and Conditions: This Quote, together with the attached statement of work, service descriptions, exhibits, or schedules (collectively, the "***Quote Documents***"), is subject to and governed by the First Due Terms and Conditions, available at: https://go.firstdue.io/terms. The First Due Terms and Conditions are incorporated into this Quote by reference and, together with this Quote and the Quote Documents, constitute the agreement between First Due and Customer governing the Services described herein. By executing this Quote, or by issuing a purchase order or other written acceptance that references this Quote, Customer agrees to be bound by the First Due Terms and Conditions.

Acceptance. This Quote shall become binding upon the earliest of: (a) Customer's execution of this Quote; (b) Customer's issuance of a purchase order or similar ordering document referencing this Quote; or (c) Customer's access to or use of the Services described in this Quote.

Locality Media, LLC dba First Due By: Josh Stanley Josh Stanley, CFO	Customer: Smyrna Fire Department (TN) By: _____ Name: David Santucci Title: Town Manager

Agreement Billing Information

Accounts Payable Contact

Name: _____

Email: _____

Phone: _____

Tax Exempt _____(Yes/No)
If yes, please email a copy of the Exempt Certificate to ar@firstdue.com.

Purchase Order Required _____(Yes/No)
If yes, please return a copy of the Purchase Order with the signed agreement or email a copy to ar@firstdue.com.

Zoho Sign Document ID: 2AB7F2F4-EJXM4TEHAGBJFZ2GFBPOXFAFJBK5_JGGB6SCYUGEEW8

STATEMENT OF WORK

1. INTRODUCTION

1.1 Purpose

This Statement of Work ("**SOW**") is entered into pursuant to, and forms part of, the Agreement between Locality Media, LLC dba First Due ("**First Due**") and the customer identified in the applicable Quote ("**Customer**"). As contemplated by the General Terms and Conditions (the "**General T&Cs**"), the Agreement consists of (i) one or more written quotes, order forms, or similar ordering documents issued by First Due and accepted by Customer (each, a "**Quote**"), (ii) this SOW, and (iii) the General T&Cs.

This SOW describes the specific implementation-related services to be provided by First Due in connection with Customer's licensed use of the products and services identified in the applicable Quote (the "**Purchased Products**"). The purpose of this SOW is to define, at a high level, the scope, assumptions, responsibilities, and limitations applicable to such implementation services, including configuration, training, data migration, integrations, and transition to ongoing customer success, as applicable.

This SOW is intended to supplement the Quote and the General T&Cs solely with respect to the scope, timing, assumptions, deliverables, and fees for the implementation services described herein and shall not modify, expand, or supersede any other rights, warranties, obligations, or risk-allocation provisions set forth in the General T&Cs or the applicable Quote.

1.2 Scope

Subject to the terms and conditions of the Agreement, First Due shall provide the implementation services expressly described in this SOW (the "**Implementation Services**") for the Purchased Products identified in the applicable Quote. The Implementation Services are limited to the configuration and enablement of existing First Due functionality, implementation assistance delivered in accordance with First Due's standard methodologies, and activities reasonably necessary to support Customer's initial deployment of the Purchased Products.

For the avoidance of doubt, any services, functionality, deliverables, integrations, configurations, reports, workflows, data preparation, remediation, customization, or professional services not expressly described in this SOW or the applicable Quote are outside the scope of the Implementation Services. No obligations shall be implied based on industry standards, prior discussions, proposals, marketing materials, or Customer expectations.

First Due does not guarantee that the Purchased Products, whether alone or as implemented, will achieve any specific business outcome, regulatory result, operational metric, or workflow preference unless such commitment is expressly stated in writing in this SOW or the applicable Quote.

The Implementation Services do not include software development, custom feature creation, third-party system remediation, data cleansing or correction, legal, tax, or compliance advice, or ongoing managed or advisory services, unless expressly stated in the applicable Quote or this SOW.

Any modification to the scope of the Implementation Services, implementation timeline, or applicable fees shall require a mutually executed written change order in accordance with the Agreement. No verbal statements, email communications, purchase orders, or informal requests shall modify this SOW or the Agreement.

Zoho Sign Document ID: 2AB7F2F4-EJXM4TEHAGBJFZ2GFBPOXFAFJBK5_JGGB6SCYUGEEW8

For Purchased Products offered as part of an "**Essentials**" or similar bundled implementation offering, the scope of Implementation Services is limited to the configuration and enablement of the modules and functionality expressly included in such bundle, as identified in the applicable Quote, and must be completed within the applicable Implementation Term described in Section 8.2. Any request to implement additional modules, defer implementation of included modules beyond the applicable Implementation Term, or materially alter the sequencing or scope of the bundled Implementation Services shall be treated as a change in scope requiring a written change order or a new statement of work, as determined by First Due.

2. IMPLEMENTATION

2.1 Overview

First Due shall perform the Implementation Services using its standard implementation methodology (generally depicted below), which may include a combination of structured (waterfall) and iterative activities. The Implementation Services are intended to support Customer's initial deployment of the Purchased Products and may include discovery, configuration, optimization, data migration, training, and go-live support, as applicable.

The parties acknowledge and agree that implementation timelines, sequencing, and activities are dependent upon Customer's timely performance of its obligations under this SOW, including the provision of information, access, approvals, and resources. All implementation milestones represent target objectives only and are not guarantees of completion by any specific date. First Due may reasonably modify the order, timing, or manner of implementation activities to maintain project efficiency or address dependencies, provided that the overall scope of the Implementation Services is not materially reduced.

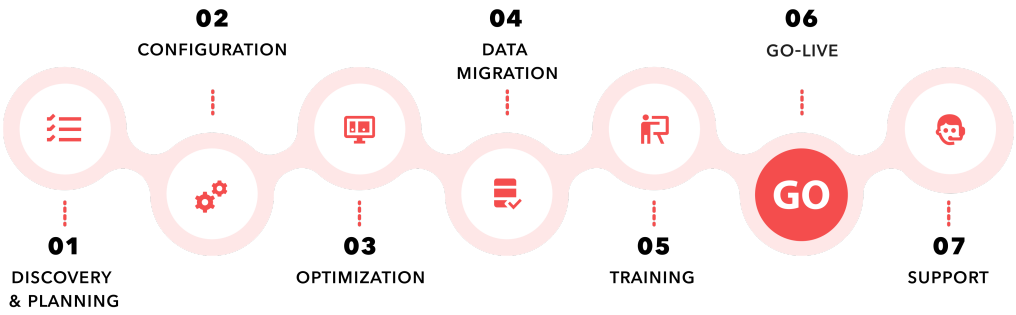

2.2 Implementation Resources

First Due shall assign implementation personnel based on the Purchased Products, project complexity, and resource availability. Titles and role descriptions are provided for reference purposes only, and First Due may substitute personnel with comparable qualifications at its discretion.

First Due's implementation resources may include an implementation manager acting as the primary point of contact during implementation, product specialists supporting configuration and optimization of specific modules or functional areas, technical specialists supporting data migration and integrations, training personnel coordinating training activities, and a customer success manager participating during later stages of implementation to support transition to post-go-live engagement.

Nothing in this SOW shall be construed to require the assignment of specific individuals, minimum staffing levels, or dedicated personnel unless expressly stated in the applicable Quote.

2.3 Implementation Phases

Zoho Sign Document ID: 2AB7F2F4-EJXM4TEHAGBJFZ2GFBPOXFAFJBK5_JGGB6SCYUGEEW8

The Implementation Services may include the phases described below. The inclusion, sequencing, timing, and depth of each phase depend on the Purchased Products and scope identified in the applicable Quote and this SOW. The phases described below reflect First Due's standard implementation approach and are provided for planning and reference purposes only.

a. Discovery and Planning

Once the implementation project has been initiated, Customer will receive tailored discovery questionnaires designed to gather information reasonably necessary to support implementation planning. Following completion of such materials, the Implementation Manager will schedule a project kick-off meeting during which Customer will receive initial system access, be introduced to the project team, and receive an overview of the Purchased Products and the implementation plan. The Implementation Manager will also establish meeting cadence and outline next steps. Where applicable, planning sessions for data migration and supported integrations, including CAD integration, will also be conducted during this phase and may be led by a Technical Implementation Specialist.

- **Key Meetings:** Project Kick-Off; CAD Kick-Off (if applicable); Data Migration Planning
- **Milestones:** Project Kick-Off; Initial System Access
- **Customer Tasks:** Completion of discovery questionnaires
- **Deliverables:** Welcome communication; initial account setup; system login credentials

b. Configuration

Following completion of discovery and planning, First Due will schedule configuration sessions to configure the Purchased Products using available functionality and standard configuration options. Configuration sessions may be conducted by the Implementation Manager or an Implementation Product Specialist, depending on the module or functional area. Customer may be required to complete preparatory tasks in advance of configuration sessions. The number and duration of configuration sessions may vary based on product scope and complexity.

- **Key Meetings:** Module configuration sessions (generally one to two per module)
- **Milestones:** N/A
- **Customer Tasks:** Configuration preparation tasks, as applicable
- **Deliverables:** Initial configuration of applicable modules
- **Scope:** Purchased Products identified in the applicable Quote

c. Optimization and User Acceptance

Following initial configuration, Customer will be provided an opportunity to perform testing and user acceptance activities for configured modules. Optimization sessions may be conducted to review Customer feedback and make configuration-level adjustments. Configuration and optimization activities may occur iteratively or in parallel to maintain project momentum.

Customer acknowledges that optimization is limited to configuration-level changes and that feedback must be provided within the review periods communicated by First Due. Unresolved items may be documented as exceptions. Upon completion of optimization for a module or functional area, Customer may be requested to provide written acceptance or sign-off.

Customer shall review and either accept or provide written notice of material nonconformity within ten (10) business days after delivery of the applicable module or functional area (the "**Review Period**"). If Customer fails to provide written notice of material nonconformity within

Zoho Sign Document ID: 2AB7F2F4-EJXM4TEHAGBJFZ2GFBPOXFAFJBK5_JGGB6SCYUGEEW8

the Review Period, or places the applicable module into production use, such module shall be deemed accepted for purposes of this SOW.

Any notice of nonconformity must identify the specific aspects of the delivered configuration that materially fail to conform to this SOW. First Due's sole obligation with respect to any timely and valid notice of nonconformity shall be to use commercially reasonable efforts to correct the identified nonconformity. Issues that do not materially impair use of the Purchased Products, or that arise from Customer data, third-party systems, or Customer-requested deviations, shall not delay acceptance.

- **Key Meetings:** Module optimization sessions (generally one to two per module)
- **Milestones:** Module acceptance and sign-off (one per module)
- **Customer Tasks:** User acceptance testing and feedback
- **Deliverables:** Optimized configuration resulting in Customer acceptance
- **Scope:** Purchased Products identified in the applicable Quote

d. Data Migration

Data migration activities may occur throughout the implementation and may include (i) initial data migration required to support configuration, (ii) migration of historical records during the implementation process, and (iii) a final data migration in connection with go-live. First Due's data migration team will review Customer's legacy data environment and provide guidance regarding extraction, mapping, and import using First Due's standard data migration practices.

Customer remains solely responsible for extracting and providing legacy data, ensuring the legality, accuracy, completeness, and quality of such data, and reviewing and validating migrated data within communicated timeframes. Not all historical data can or should be migrated, and standard data migration services do not include data cleansing, normalization, deduplication, correction, or remediation of data quality issues.

- **Key Meetings:** Data migration planning
- **Milestones:** Data migration sign-off
- **Customer Tasks:** Data extraction or access; data mapping assistance; review and approval of data loads
- **Deliverables:** Data migration plan; mapping assistance; data imports

e. Training

As implementation progresses toward completion, First Due will coordinate training activities intended to support Customer's understanding and adoption of the Purchased Products. Training may include administrator training conducted during configuration and optimization, as well as formal webinar-based or onsite training sessions. Customer may also be provided access to generally available training resources, including live training sessions and on-demand materials.

- **Key Meetings:** Training planning; training sessions
- **Milestones:** Training completion
- **Customer Tasks:** Coordination of personnel to be trained
- **Deliverables:** Training plan and training sessions

f. Go-Live Support

Once required configuration, optimization, training, and data migration activities have been completed or scheduled, First Due may support the go-live process. Go-live support may

Zoho Sign Document ID: 2AB7F2F4-EJXM4TEHAGBJFZ2GFBPOXFAFJBK5_JGGB6SCYUGEEW8

include final planning, execution assistance, final data migration, and short-term post-go-live support. Go-live support is limited in duration and does not include ongoing operational management or indefinite support services.

- **Key Meetings:** Go-live planning; post-go-live check-ins
- **Milestones:** System acceptance; go-live
- **Customer Tasks:** Final testing
- **Deliverables:** Post-go-live implementation support (typically two to four weeks)

g. Transition to Customer Success

Following completion of the post-go-live support period or upon expiration of the applicable Implementation Term or Essentials Implementation Period (whether or not all Purchased Products have been implemented), responsibility for ongoing engagement will transition to First Due's customer success and support teams in accordance with the Agreement.

3. TRAINING

3.1 Training Services

Training services, if expressly included in the applicable Quote, are provided solely to support Customer's initial familiarization with and adoption of the Purchased Products in connection with the implementation described in this SOW. Training is limited to instruction regarding the operation and use of existing, generally available functionality of the Purchased Products as configured during implementation and does not include consulting services, business process redesign, regulatory analysis, compliance advisory services, certification of Customer personnel, or any form of legal, regulatory, or compliance advice.

The nature, format, scope, and quantity of training to be provided under this SOW shall be as expressly described in the applicable Quote or as otherwise mutually agreed by the parties in writing during the implementation process. Training may be delivered remotely or onsite, may include administrator-level instruction or end-user training, and may include access to First Due's generally available training resources, including recorded materials, documentation, and knowledgebase content, subject to availability.

3.2 Customer Responsibilities

Customer is solely responsible for identifying appropriate personnel to participate in training and for ensuring the availability, preparedness, and participation of such personnel in scheduled training sessions. Customer shall also be responsible for providing any facilities, equipment, system access, or network connectivity reasonably necessary for First Due to conduct training sessions, whether delivered remotely or onsite.

Failure of Customer personnel to attend or meaningfully participate in scheduled training sessions shall not relieve Customer of its payment obligations under the Agreement or the applicable Quote and shall not obligate First Due to reschedule such sessions or provide substitute training unless otherwise agreed in writing by the parties.

3.3 Limitations and Disclaimers

Customer acknowledges that training services are provided on an "as-configured" basis and do not guarantee user proficiency, system adoption, operational performance, or achievement of any specific business, regulatory, or compliance outcome. First Due does not warrant that training will result in compliance with any applicable laws, regulations, standards, or internal policies, all of which remain the sole responsibility of Customer.

Zoho Sign Document ID: 2AB7F2F4-EJXM4TEHAGBJFZ2GFBPOXFAFJBK5_JGGB6SCYUGEEW8

Any training services requested by Customer that are not expressly included in the applicable Quote shall be deemed outside the scope of this SOW and shall require a mutually executed written change order, which may include additional fees and adjustments to the implementation timeline.

4. DATA MIGRATION

4.1 Standard Data Migration Services

As part of the Implementation Services provided pursuant to the Agreement, First Due shall provide standard data migration services to support Customer's initial deployment of the Purchased Products. Data migration services are intended solely to enable operational use of the Purchased Products at or around go-live and are not intended to result in a complete, exact, or forensic replication of Customer's legacy systems, databases, or historical data environment.

Standard data migration services may include planning assistance, guidance regarding data extraction, data mapping to First Due's standard import formats, and the loading of certain Customer data into the Purchased Products using First Due's standard tools and processes, as reasonably determined by First Due based on the nature, structure, format, and condition of Customer's data.

4.2 Customer Responsibilities

Customer acknowledges and agrees that Customer is solely responsible for extracting, preparing, and providing all data to be migrated, whether directly or through Customer's third-party vendors. Customer is responsible for the legality, accuracy, completeness, consistency, quality, and integrity of all data provided to First Due, including compliance with applicable laws, regulations, records retention requirements, privacy obligations, and internal policies.

Customer shall timely review and validate all migrated data and shall notify First Due in writing of any material discrepancies within the reasonable review period communicated by First Due. Customer's failure to timely review, validate, or object to migrated data shall constitute acceptance of such data for purposes of implementation.

4.3 Scope Limitations

Customer acknowledges that not all data from Customer's legacy systems may be suitable, necessary, or technically feasible to migrate. First Due does not warrant that all data fields, historical records, attachments, metadata, audit trails, system logic, or reporting constructs can or will be migrated.

Standard data migration services do not include data cleansing, normalization, deduplication, enrichment, correction of errors, reconstruction of historical workflows, validation against source systems, or remediation of data quality issues unless expressly agreed in writing by the parties pursuant to a change order. Any such additional services, if requested, may be subject to additional fees and timeline adjustments.

4.4 Migration Timing and Final Data Load

Data migration may occur in multiple stages throughout the implementation process, including preliminary data loads for configuration or testing purposes and a final data load in connection with go-live. Customer acknowledges that data entered into Customer's legacy systems following any data extraction or preliminary migration may not be included in subsequent data loads unless expressly agreed in writing.

Zoho Sign Document ID: 2AB7F2F4-EJXM4TEHAGBJFZ2GFBPOXFAFJBK5_JGGB6SCYUGEEW8

Customer is responsible for coordinating timely access to legacy systems, third-party vendors, and technical resources as reasonably necessary to support data migration activities and acknowledges that delays in such access may impact the implementation timeline and sequencing.

4.5 Disclaimers and Risk Allocation

Customer acknowledges that data migration is inherently dependent on Customer-provided data and third-party systems. Except to the extent caused by First Due's failure to perform the migration process in material accordance with this SOW, First Due shall have no liability arising from errors, omissions, corruption, loss, or inaccuracy of data originating from Customer systems, Customer-provided data, or third-party sources.

Customer remains solely responsible for verifying the completeness and accuracy of migrated data prior to go-live, for maintaining backups of legacy data, and for satisfying any legal or regulatory obligations related to data retention, preservation, or auditability. Nothing in this SOW expands or modifies First Due's data protection, security, or confidentiality obligations beyond those expressly set forth in the General T&Cs.

5. INTEGRATIONS

5.1 Integration Scope

As part of the Implementation Services, First Due shall configure and enable the integrations expressly identified in the applicable Quote (the "**Integrations**"), using First Due's standard integration methods, connectors, or application programming interfaces, as applicable. Integrations are intended solely to support data exchange or interoperability between the Purchased Products and designated third-party systems and are limited to the functionality supported by First Due at the time of implementation.

Integrations shall generally be implemented during the configuration and optimization phases described in Section 2, unless otherwise reasonably determined by First Due based on technical dependencies, sequencing considerations, or third-party constraints. Certain integrations, including but not limited to CAD integrations, may require dedicated planning or configuration sessions due to their complexity and reliance on third-party systems.

No integrations are included unless expressly identified in the applicable Quote.

5.2 Customer Responsibilities and Dependencies

Customer acknowledges that the successful implementation and ongoing operation of any Integration is dependent upon Customer's third-party vendors, systems, configurations, permissions, data structures, network environments, and continued availability of third-party services. Customer is solely responsible for procuring and maintaining all required third-party systems, licenses, access credentials, approvals, and cooperation necessary to enable the Integrations.

Customer shall ensure that First Due is provided timely access to relevant systems, technical documentation, and knowledgeable personnel as reasonably necessary to support integration activities. Delays, failures, or limitations caused by third-party systems, vendors, or Customer dependencies shall excuse any corresponding delay in First Due's performance and shall not constitute a breach of this SOW.

5.3 Limitations and Exclusions

Customer acknowledges and agrees that Integrations are provided on an "as-available" basis and are limited to the data fields, workflows, and functionality supported by First Due and the applicable third-party systems at the time of implementation. First Due does not warrant that

Zoho Sign Document ID: 2AB7F2F4-EJXM4TEHAGBJFZ2GFBPOXFAFJBK5_JGGB6SCYUGEEW8

any Integration will be uninterrupted, error-free, or compatible with future changes made by third-party vendors.

First Due does not control, and shall have no responsibility or liability for, third-party systems, vendors, outages, data inaccuracies, latency, security vulnerabilities, or changes to third-party interfaces, APIs, data schemas, or commercial terms. Any remediation, modification, or reconfiguration required due to changes or failures of third-party systems shall be outside the scope of this SOW unless otherwise agreed in writing pursuant to a change order.

5.4 Post-Go-Live Support for Integrations

Following go-live, First Due will provide reasonable support for Integrations in accordance with the support terms set forth in the Agreement. Such support is limited to diagnosing whether an issue originates within the Purchased Products and, where appropriate, coordinating with Customer or applicable third-party vendors to facilitate resolution.

First Due shall have no obligation to modify, replace, or re-engineer any Integration due to changes imposed by third-party vendors unless such work is expressly agreed by the parties pursuant to a written change order and may be subject to additional fees and timeline adjustments.

5.5 No Guarantees

Customer acknowledges that Integrations are provided as a convenience to facilitate interoperability and do not guarantee data accuracy, timeliness, completeness, availability, or suitability for Customer's operational, regulatory, reporting, or compliance needs. Customer remains solely responsible for verifying the accuracy and appropriateness of data received through any Integration and for compliance with all applicable laws, regulations, and internal policies related to such data.

6. CUSTOMER SUCCESS MANAGER

Following completion of the implementation and transition from any post-go-live implementation support period, First Due shall assign a Customer Success Manager ("**CSM**") to serve as Customer's primary point of contact for ongoing relationship management, as contemplated by the Agreement. The CSM's role is intended to support Customer's use of the Purchased Products through periodic check-ins, coordination of communications, and facilitation of access to generally available resources and information regarding product updates, features, and services.

Customer acknowledges and agrees that the CSM does not provide consulting services, operational or project management, system administration, legal, regulatory, or compliance advice, or any guarantees regarding system adoption, performance, availability, or business outcomes. Any guidance or information provided by the CSM is informational in nature only and shall not modify or expand the terms of the Agreement, the applicable Quote, or this SOW.

The frequency, format, and content of CSM interactions may vary based on Customer needs, product usage, and First Due's standard customer success practices and may change over time. The assignment of a CSM does not obligate First Due to provide dedicated personnel, minimum service levels, response times, or ongoing professional services beyond those expressly set forth in the Agreement.

Any requests by Customer for services beyond the scope of standard customer success activities, including additional training, configuration changes, integrations, analysis, or consulting services, shall be subject to a separate written agreement or change order and may require additional fees.

Zoho Sign Document ID: 2AB7F2F4-EJXM4TEHAGBJFZ2GFBPOXFAFJBK5_JGGB6SCYUGEEW8

7. CUSTOMER SUPPORT

7.1 Support Services Generally

Customer support services are provided pursuant to the Agreement and any applicable support policies referenced therein and are intended to assist Customer with questions, requests, or issues related to the operation of the Purchased Products following go-live. Customer support services are separate from, and not a continuation of, the Implementation Services described in this SOW.

Except as expressly set forth in the Agreement or the applicable Quote, customer support services do not include implementation services, professional services, consulting, system administration, configuration changes, data correction, or training.

Nothing in this SOW shall be construed to create any service level commitment, response time obligation, or priority support entitlement unless expressly stated in the Agreement or the applicable Quote.

7.2 Support Requests and Contact Information

When Customer submits a request for customer support, First Due will create a support ticket within its customer support system and assign a unique ticket identifier for tracking and documentation purposes. Support requests may be submitted through any of the support channels made available by First Due in accordance with its then-current support procedures.

As of the effective date of this SOW, Customer may contact First Due customer support using the following channels:

Online Support Portal: support.firstduesizeup.com

Email: support@firstdue.com

Telephone: (516) 874-5818

First Due may update or modify its support systems, tools, contact methods, or intake processes from time to time, provided that commercially reasonable access to customer support is maintained.

7.3 Self-Service Resources

First Due may provide Customer with access to self-service support resources through its online support center or knowledgebase. Such resources may include instructional materials, step-by-step articles, frequently asked questions, videos, and best practices and are generally available on a twenty-four (24) hour basis.

Self-service resources are provided as a convenience to Customer and are intended to supplement, but not replace, direct customer support. First Due does not warrant the completeness, accuracy, or continued availability of any specific self-service resource.

7.4 Hours of Operation and Severity

Customer support hours of operation ("**Business Hours**") are generally Monday through Friday, from 9:00 a.m. to 6:00 p.m. Eastern Time, excluding First Due-observed holidays.

First Due may provide twenty-four (24) hour, seven (7) day support coverage for issues classified by First Due as severity level one (Sev 1), meaning system-down or urgent issues, in accordance with its then-current support practices. Severity classifications, response times,

Zoho Sign Document ID: 2AB7F2F4-EJXM4TEHAGBJFZ2GFBPOXFAFJBK5_JGGB6SCYUGEEW8

and resolution objectives, if any, are governed exclusively by the Agreement and applicable support policies and are not expanded or modified by this SOW.

7.5 Limitations

Customer acknowledges that customer support services are limited to issues arising from the Purchased Products as delivered and do not include responsibility for third-party systems, integrations, Customer-provided data, network environments, or issues caused by Customer modifications, misuse, or failure to follow documentation.

Customer further acknowledges that First Due may suspend or limit support services in accordance with the Agreement, including in connection with non-payment, security concerns, or misuse of the Purchased Products.

8. ASSUMPTIONS

8.1 Customer Participation and Cooperation

Customer acknowledges that the successful performance of the Implementation Services is dependent upon timely and meaningful participation by Customer personnel. Customer shall designate knowledgeable representatives with appropriate authority to make decisions, provide approvals, and coordinate resources as reasonably required to support implementation activities. Customer shall attend scheduled meetings, complete preparatory tasks, provide required information and access, and perform testing and validation activities in a timely manner.

Customer acknowledges that implementation activities generally require ongoing Customer involvement, including reasonable weekly time commitments for meetings, review, testing, and preparatory work. Any failure or delay by Customer to perform its responsibilities under this SOW shall excuse any corresponding delay in First Due's performance and may result in adjustments to the implementation timeline, sequencing, or resource allocation.

If Customer's failure to participate, provide required information, access, approvals, or resources materially impacts the scope, timing, or effort required to perform the Implementation Services, First Due may require a mutually executed written change order to continue implementation on revised terms.

8.2 Implementation Term and Expiration

The implementation services described in this SOW are intended to be completed within twelve (12) months following the Subscription Start Date specified in the applicable Quote, as contemplated by the Agreement (the "**Implementation Term**"). Notwithstanding the foregoing, for Purchased Products sold as part of an "Essentials" or similar bundled implementation offering, the parties agree that the Implementation Services are intended to be completed within a limited implementation period of four (4) months following the Subscription Start Date (the "**Essentials Implementation Period**"), unless otherwise expressly stated in the applicable Quote.

Except for delays materially caused by First Due, if implementation activities are delayed due to Customer actions, Customer dependencies, third-party systems or vendors, or circumstances outside either party's reasonable control, First Due may, in its discretion, extend the Implementation Term, provided there is a mutually agreed written plan to complete the remaining implementation activities within such extension period.

Expiration of the Implementation Term shall not affect Customer's subscription to the Purchased Products, Customer's obligation to pay fees under the Agreement, or First Due's obligations relating to customer support and customer success services following go-live, all of which shall be governed exclusively by the Agreement and the applicable Quote.

Zoho Sign Document ID: 2AB7F2F4-EJXM4TEHAGBJFZ2GFBPOXFAFJBK5_JGGB6SCYUGEEW8

If Customer does not complete implementation of all modules included in an Essentials or bundled offering within the applicable Essentials Implementation Period due to Customer delay, deferral, or inaction, First Due shall have no obligation to continue providing implementation services for the unimplemented modules. Customer may either (i) configure such modules independently using the Purchased Products, or (ii) engage First Due for additional implementation services pursuant to a new statement of work or change order, subject to additional fees. In such event, Customer shall be deemed transitioned out of implementation status and into customer success and support as provided under the Agreement.

8.3 Standard Functionality and Best Practices

Customer acknowledges that the Purchased Products are standardized, configurable software solutions designed to support a broad range of customers and operational use cases. While First Due will reasonably consider Customer's existing workflows during implementation, First Due may recommend the use of standard functionality, configurations, or industry best practices to promote efficiency, maintainability, system performance, and timely completion of implementation.

Customer further acknowledges that implementation may require changes to Customer's existing workflows, processes, or operational practices and that such changes do not constitute a failure of the Implementation Services or a breach of this SOW.

8.4 Go-Live Requirements and Known Gaps

During the course of implementation, the parties may identify functional limitations, dependencies, or gaps in the Purchased Products relative to Customer's desired workflows. Certain items may be designated by the parties as requirements for go-live. Where commercially reasonable and technically feasible, such items will be prioritized for completion prior to go-live.

Customer acknowledges that certain non-critical features, enhancements, or refinements may not be available at go-live and may instead be documented as exceptions in applicable module or system sign-offs, with target timeframes for future delivery if applicable. The existence of such exceptions shall not delay go-live unless expressly agreed in writing by the parties.

8.5 No Outcome, Compliance, or Advisory Guarantees

Customer acknowledges that the Implementation Services are intended solely to enable deployment and initial use of the Purchased Products. First Due does not guarantee any specific operational, financial, regulatory, compliance, accreditation, or business outcomes arising from implementation or use of the Purchased Products.

Customer further acknowledges that the Implementation Services are technical and configurational in nature only and do not constitute legal, regulatory, tax, compliance, or professional advice. Customer remains solely responsible for determining whether the Purchased Products, as implemented, satisfy Customer's legal, regulatory, policy, or operational requirements and for ensuring Customer's use of the Purchased Products complies with applicable law and internal standards.

8.6 Suspension for Assumption Failure

First Due may suspend Implementation Services, without liability, if Customer fails to satisfy the assumptions set forth in this Section 8, including failures relating to participation, access, data availability, approvals, or third-party dependencies. Any such suspension shall not constitute a breach of this SOW and shall not relieve Customer of its payment obligations under the Agreement.

Zoho Sign Document ID: 2AB7F2F4-EJXM4TEHAGBJFZ2GFBPOXFAFJBK5_JGGB6SCYUGEEW8

[End of Statement of Work]

Zoho Sign Document ID: 2AB7F2F4-EJXM4TEHAGBJFZ2GFBPOXFAFJBK5_JGGB6SCYUGEEW8

CONTACT

For additional information, please contact:

Kevin Mulligan

FIRST DUE ACCOUNT REPRESENTATIVE

kevin.mulligan@firstdue.com



Zoho Sign

Generated on Jun 15, 2026 22:00 EDT

Certificate of Completion

Summary

Document ID: 2AB7F2F4-EJXM4TEHAGBJFZ2GFBPOXFAFJBK5_JGGB6SCYUGEEW8

Document name: Smyrna Fire Department (TN)-06-15-2026 (1).pdf

Sent by: Kevin Mulligan <kevin.mulligan@firstdue.com>

Organization: First Due
107 7th Street, Garden City, NY, United States 11530

Sent on: Jun 15, 2026 17:21:18 EDT

Completed on: Jun 15, 2026 22:00:05 EDT

Sign order: Sequential

No. of documents: 1

Time zone: America/New_York (GMT-04:00)

Signers: 1

Receives a copy: 0

Approvers: 0

Witnesses: 0

Recipient reviewers: 0

Recipients

Signer

Josh Stanley
josh.stanley@firstdue.com

Signature



Emailed on: Jun 15, 2026 17:21:19 EDT

Viewed on: Jun 15, 2026 21:59:50 EDT

Terms agreed on: Jun 15, 2026 21:59:58 EDT

Signed on: Jun 15, 2026 22:00:05 EDT

Accessed from: 170.52.149.159

Device used: Mobile

Authentication type: None

Legal Disclosure

ELECTRONIC RECORD AND SIGNATURE DISCLOSURE

Please read the following information carefully. By clicking the 'I agree' button, you agree that you have reviewed the following terms and conditions and consent to transact business electronically using Zoho Sign electronic signature system. If you do not agree to these terms, do not click the 'I agree' button.

Electronic documents

Please note that First Due ("we", "us" or "Company") will send all documents electronically to you to the email address that you have given us during the course of the business relationship unless you tell us otherwise in accordance with the procedure explained herein. Once you sign a document electronically, we will send a PDF version of the document to you.

Request for paper copies

You have the right to request paper copies of these documents sent to you electronically from rami@firstduesizeup.com. Alternatively, you also have the ability to download and print these documents sent to you electronically, and re-upload a scanned copy of the printed and physically signed documents. If you, however, wish to request paper copies of these documents sent to you electronically, you can write back to the sender.

Withdrawing your consent

At any point in time during the course of our business relationship, you have the right to withdraw your consent to receive documents in electronic format. If you wish to withdraw your consent, you can decline to sign a document that we have sent to you and send an email to rami@firstduesizeup.com informing us that you wish to receive documents only in paper format. Upon request from you, we will stop sending documents using Zoho Sign electronic signature system.

To advise First Due of your new email address

If you need to change the email address that you use to receive notices and disclosures from us, write to us at rami@firstduesizeup.com

System requirements

Compatible with recent versions of popular browsers such as Chrome, Firefox, Safari, and Internet Explorer. Zoho Sign is also available on iOS and Android devices.

first due

107 Seventh St
Garden City, NY 11530, United States

First Due Quote

Prepared By: Kevin Mulligan
Valid Until: Aug 31, 2026
Quote Number: 1545132000504331928

Smyrna Fire Department (TN)

We are excited to present pricing for the First Due Suite! Please see detailed breakdown below. It is important to note that First Due is a cloud-based system, and all Support, Maintenance, Hosting and Upgrades are ALWAYS INCLUDED.

First Due Modules and Implementation Services Included - Description
Occupancy Management & Pre-Incident Planning Manage Occupancies, Pre-Incident Mapping, ArcGIS Maps, Fire Systems, Hazardous Material, and Contacts.
Responder Web Responder dashboard and Responder iOS/Android App with notifications, statusing and routing.
Hydrant Management - Advanced Manage Hydrants including hydrants visible on pre-plan & response map, hydrant list, hydrant types, hydrant uploads, ArcGIS hydrant layers, hydrant setup, hydrant service checklist, data management, mapping, service inspections, hydrant flow test and reporting.
Inspections Field Inspections, Configurable Checklists, Violation Management, Virtual Inspections, Inspections Scheduler, and Integrated Pre-Incident Planning.
Investigations Organize, analyze and document investigations, keeping case information secure and separated from, but integrated with other modules.
Incident Reporting - Fire Incident Documentation NFIRS Incident Documentation, State and Federal Compliance with automated submission.
AI Enhanced Documentation: Fire Reporting AI powered transcription and documentation solution to assist with completing NFIRS/NERIS reports.
Incident Reporting - NFIRS EMS+ Includes standard NFIRS EMS Module with additional fields for enhanced patient documentation. Fields include Treatments, Procedures, Medications, Vitals, Signature
Scheduling Manage staff schedules with an interactive shift board, configurable call shifts module, messaging, time-off and shift trades.
Personnel Management Store, Manage and Access Employee Records including demographic data, certifications and employment information.
Basic Training Records Assign Training, Record Completions, View Training Logs, and Manage Certifications.
Events & Activities Create Events, View Global Activity Log, and Access Global Calendar.
Assets & Inventory Assets, vehicles, equipment and inventory management, assets and equipment checks, and work order management.
CAD Integration (Other) Receive CAD Data to support First Due Responder and Incident Reporting modules via sFTP, XML, or API.
Premium Online Training Package Up to 8 Hours Online Training with certified First Due Instructor

Please do not share or reproduce without proper authorization | © First Due | www.firstdue.com

First Due Modules and Implementation Services Included - Description

Implementation and Configuration Services
Services related to configuring and customizing the First Due Platform as described in the Statement of Work.

One-Time Subtotal	**$ 8,400.00**
Subscription Subtotal	**$ 42,550.00**
Total Year 1	**$ 22,867.00**

**Excluding Tax*

Please do not share or reproduce without proper authorization | © First Due | www.firstdue.com

Zoho Sign Document ID: 2AB7F2F4-SQNWT9W9KBNSJWVM_MGYVDUGYLFRRLGDY5JFW9WGONM

STANDARD ADDENDUM TO AGREEMENT

This standard contract addendum is executed on the _____ day of _____ , 2026 by and between **THE TOWN OF SMYRNA, TENNESSEE,** a municipal corporation in the State of Tennessee, herein further referenced and identified as ("The Town") and **LOCALITY MEDIA, LLC D/B/A FIRST DUE**, herein further referenced and identified as ("Vendor") in order to amend the terms of the Agreement, including all attachments, exhibits, or any actual or virtual documents or writing, including, but not limited to, all any “clickwrap,” “clickthrough” or “click and accept” agreement or other Terms of Service.

WITNESSETH

WHEREAS, the parties wish to execute this addendum to the Agreement for the purposes of substituting, clarifying or inserting certain terms of or into their original Agreement executed on the _____ day of _____, 20_____; and

WHEREAS, the terms of this addendum to the Agreement shall take precedence over all other terms, conditions or language to the contrary or in conflict with the language contained in the Agreement; however, any term or clause not modified by the provisions herein shall be governed by the original agreement. The parties agree that this addendum shall not be construed to create any ambiguity, it being the expressed intent of the parties that this addendum shall control;

THEREFORE, In consideration of using Vendor’s form Agreement, the mutual promises set out herein, and other good and valuable consideration, the sufficiency of which is hereby acknowledged by Vendor the parties hereto agree to the following:

1. VENUE: The parties agree that venue for any legal or other dispute arising under the terms of the original agreement or this addendum to agreement shall lie exclusively in the courts of Rutherford County, Tennessee or the United States District Court, for the Middle District of Tennessee. The parties hereby waive their right to a jury trial;

2. CHOICE OF LAW: The Agreement shall be deemed to be entered into under Tennessee law, and the rights and obligation of the parties are governed by the laws of the

Zoho Sign Document ID: 2AB7F2F4-SQNWT9W9KBNSJWVM_MGYVDUGYLFRRLGDY5JFW9WGONM

State of Tennessee, without regard to its conflict of laws principles, and all obligations of the parties are performable in Smyrna, Tennessee.

3. INDEMNIFICATION: The parties hereto agree that Vendor shall indemnify The Town for any and all claims of negligence, tortious conduct or otherwise unlawful acts committed by Vendor in the performance of their obligations under the terms of the original agreement or this addendum to agreement and Vendor agrees to pay any and all costs associated with the enforcement of the terms of this indemnity agreement by The Town, including but not limited to, court costs, civil judgments, assessments or any other reasonable fees associated therewith. In addition, Article II, Section 29 of the Tennessee Constitution prohibits municipalities from lending their credit to private or public entities and, therefore, prohibits an agreement by the Town to indemnify a third party or agree to a limitation of liability provision. Any indemnity or hold harmless provision contained in the Agreement requiring the Town to indemnify or hold harmless Vendor or any other person or entity or any limitation of liability in favor of Vendor shall be deemed null, void and unenforceable against the Town under any and all circumstances.

4. NON-APPROPRIATION: Vendor acknowledges that the Town is a governmental entity, and the validity of the Agreement is based upon the availability of public funding under its authority. In the event the Town fails to appropriate funds or make monies available for any fiscal year covered by the term of the Agreement for services to be provided, the Agreement shall be terminated on the last day of the fiscal year for which funds were appropriated or monies made available for such purposes without liability to the Town, and such termination shall not be a breach of the Agreement, and any unused payment made to Vendor shall be returned to the Town.

5. TAX EXEMPTION: As a tax-exempt entity, the Town shall not be responsible for sales or use taxes incurred for products or services. The Town shall supply Vendor with

Zoho Sign Document ID: 2AB7F2F4-SQNWT9W9KBNSJWVM_MGYVDUGYLFRRLGDY5JFW9WGONM

its Sales and Use Tax Exemption Certificate upon Vendor's request. Vendor shall bear the burden of providing its suppliers with a copy of the Town's tax exemption certificate and Vendor shall assume all liability for such taxes, if any, that should be incurred.

6. NO ATTORNEY'S FEES: The parties hereto agree that The Town shall be in no event liable for any attorney's fees which Vendor may incur due to breach of the original agreement or this addendum agreement by either party; and further, The Town shall not acquiesce to any term of the original contract/agreement that indicates or infers The Town may or shall be responsible for the fees of another party or the Vendor's attorney fees.

7. MEDIATION; NO ARBITRATION: The Town may, at its option, require the attempted resolution of any dispute arising under the original contract or this addendum to agreement by mediation prior to the filing of any lawsuit or other claim. Should any dispute arise, Vendor shall provide the Town notice of any intent to file suit by certified mail. The Town shall notify the Vendor of its intent to exercise its right to mediation within thirty (30) days of receiving such notice. If the Town does not exercise its right to mediation, Vendor may file suit. Any mediator selected under this clause shall be agreed upon by the parties and the costs of such mediation shall be divided and paid equally between the parties. The parties hereby further agree that, except as provided for in this addendum or by applicable law, the parties shall not be required to participate in any alternative dispute resolution process or procedure, including but not limited to arbitration and med-arb, relating to disputes that arise between the parties to the Agreement.

8. FAILURE TO PERFORM: The parties agree, in the event Vendor fails to perform any obligation, other than with regards to the date of delivery, set out in the Agreement/Contract, the Town shall be reimbursed by Vendor for any and all expenses associated with having to obtain a new provider to finish out the contracted term, including, but in no way limited to, any charges/fees, which are above and beyond the amount the Town would have paid to Vendor to complete the same task; provided, however, that if the failure, by its nature, is one that can be cured, the Vendor shall have fifteen (15) business days after receipt of written notice from the Town to cure said failure to perform. The parties hereby agree, unless a specific date of delivery is provided in the

Zoho Sign Document ID: 2AB7F2F4-SQNWT9W9KBNSJWVM_MGYVDUGYLFRRLGDY5JFW9WGONM

Agreement/Contract all deliveries shall be made to the Town no later than ninety (90) days from the date of the Agreement/Contract. The parties further agree that if Vendor, in good faith, is not able to meet this ninety (90) day deadline of delivery due to forces beyond his, her or its control, that were unforeseeable at the time of signing the Agreement/Contract, then the entire Agreement/Contract shall be voidable at the sole discretion of the Town. Should the Town elect to void the Agreement/Contract due to Vendor's good faith inability, due to forces beyond his, her or its control, and which were unforeseeable at the time of signing the Agreement/Contract to meet the delivery deadline, then neither party shall be deemed to have breached the Agreement/Contract, and Vendor shall return all monies, within seven (7) business days, paid by the Town for the products/items that could not be delivered in the allotted time. This provision shall take propriety over any Force Majeure Clause contained within the Agreement/Contract.

9. USE OF TOWN's LOGO OR NAME: Vendor shall not use the Town's name or any logo in marketing or publicity materials or for marketing or publicity purposes without the prior written authorization from the Town. Vendor shall not issue, publish, or divulge any materials developed or used in the performance of this Agreement or make any statement to the media relating to this Agreement without the prior written consent of the Town.

10. WARRANTY: Vendor warrants that the product(s) herein, when used in accordance with the documentation, shall operate and conform in all material respects in conformity with this Agreement and the written representations of Vendor, including applicable user manuals and guides supplied by Vendor or with Vendor's Software. If it does not perform as warranted, Vendor shall use all commercially reasonable efforts to correct the product(s) so that it operates in all material respects in conformity with the written representations of Vendor. If Vendor cannot correct the product(s) within a reasonable period of time, Vendor shall refund the purchase price of the product(s).

11. SOFTWARE DEADLINE, TESTING AND ACCEPTANCE: If applicable to the Agreement, software provided by Vendor shall be installed for the purposes of testing, as stated herein below, no later than one hundred twenty (120) days from the effective date of the Agreement and this Addendum thereto, unless the Agreement states

Zoho Sign Document ID: 2AB7F2F4-SQNWT9W9KBNSJWVM_MGYVDUGYLFRRLGDY5JFW9WGONM

a specific date which is before or after said deadline. In Addition, software provided by Vendor to the Town is subject to inspection and testing to verify that the software conforms to its written specifications and to ensure it meets the Town's needs. The Town shall have seven (7) business days after the software is installed to perform testing of the software using the Town's data. The Town shall provide Vendor with written notice of acceptance or rejection of the software five (5) business days or less after the end of the testing period. If the Town does not provide timely written notice of acceptance or rejection to Vendor, the software shall be deemed to be accepted by the Town. If the software is rejected, the Town may, at its sole discretion, either (1) return the software and receive a refund of all fees paid with respect thereto, or (2) allow Vendor to repair or replace the software, without charge, in a timely manner. In the event the Town elects to allow the Vendor to repair or replace the software, the Town shall have an additional (7) business days in which to accept or reject the software as laid out hereinabove.

12. NO AUTOMATIC RENEWAL: The term of the Agreement shall not be renewed or extended beyond the initial term and any provision providing for automatic or continuing renewal of the Agreement is not applicable.

13. UNILATERAL MODIFICATION OF AGREEMENT NOT PERMITTED: Vendor may make unilateral changes to its Privacy Policy, provided any such changes are subject to the provisions of this Addendum, shall not alter this Addendum, and shall not materially alter the use of the service or reduce the level of protection provided to the Town at the time of the execution of this Agreement. Except as provided in the preceding sentence, notwithstanding anything in the Agreement to the contrary, any change to the Agreement made by Vendor that is not in writing and that is not properly executed by the signatures of authorized representatives of the parties hereto, including attestation by the Town's Clerk and approved as to form by the Town Attorney are subject to the terms and conditions of this Addendum, and shall not alter this Addendum and shall not materially alter the use of the service or reduce the level of protection provided to the Town at the time of the execution of this Agreement.

14. CHANGES TO TERMS. Except as provided in Paragraph No. 13 above pertaining to Vendor's Privacy Policy, Vendor shall provide the Town written notice, sent

Zoho Sign Document ID: 2AB7F2F4-SQNWT9W9KBNSJWVM_MGYVDUGYLFRRLGDY5JFW9WGONM

in care of Town Attorney's Office, Smyrna, Tennessee, 315 South Lowry Street, Tennessee 37167, of any proposed change to the Agreement at least ninety (90) days prior to being effective to the Town. The Town shall have thirty (30) days after receiving the written notice to terminate this Agreement, and such cancellation shall not be a breach of this Agreement. Vendor will refund to the Town any payment made by the Town to Vendor equal to the difference between the number of months the payment was intended for and the number of months remaining on Agreement that the fee was intended to cover.

15. PRICE ASSURANCE: Unless specifically stated in the Agreement, the price shall be valid for the full term of the Agreement. If Vendor, specifically states, in the Agreement that he, she or it cannot honor the price for the full term of the Agreement; the Agreement is voidable at the sole discretion of the Town, if at any time during the full term of the Agreement, Vendor requests to raise the contract price. If the Town elects to void the Agreement, at its sole discretion, it shall not be deemed to be a breach of the contract by either party.

16. CONFIDENTIALITY: The Town, as a Tennessee Municipal Corporation is subject to the Tennessee Open Records Act, set out in T.C.A. §10-7-503 et seq; therefore, this Addendum, the Agreement and all documents or materials, in any format, including, but not limited to paper, electronic or virtual, that are public records pursuant to law, are not confidential and are subject to disclosure, without regard to any provision contained in the Agreement declaring information confidential. The Town will respond to all proper Open Records Requests in the time allowed by law, without any requirement to disclose such request to Vendor or provide Vendor with notice or the time to obtain a protective order. The Town does not have the burden of establishing that information is not confidential information or that its release is authorized to release the records. This section 16 serves to meet such burden and authorization of disclosure.

17. BOYCOTT OF ISRAEL: The Vendor certifies that it is not currently engaged in, and covenants that it will not, for the duration of the Contract, engage in a Boycott of Israel, as that term is defined in Tenn. Code Ann. § 12-4-119.

18. NO PRESUMPTION AGAINST DRAFTER: The parties are both business entities having substantial experience with the subject matter of this addendum, and each

Zoho Sign Document ID: 2AB7F2F4-SQNWT9W9KBNSJWVM_MGYVDUGYLFRRLGDY5JFW9WGONM

has fully participated in the negotiation and drafting of this addendum. Accordingly, this addendum shall be construed without regard to the rule that ambiguities in a document are to be construed against the draftsman. No inferences shall be drawn from the fact that the final, duly executed addendum differs in any respect from any previous draft hereof.

19. SURVIVAL: This entire addendum shall survive the completion of or any termination of the Agreement or other document which may accompany the Agreement or be incorporated by reference and shall remain in full force and effect until the expiration of any applicable statute of limitation.

20. EFFECTIVE DATE: This addendum shall be deemed to have the same effective date of the Agreement.

(execution page follows)

Zoho Sign Document ID: 2AB7F2F4-SQNWT9W9KBNSJWVM_MGYVDUGYLFRRLGDY5JFW9WGONM

IN WITNESS WHEREOF, the parties hereto warrant and represent that the individual who has signed this addendum on behalf of such party is duly authorized by all necessary and appropriate corporate action to sign this addendum.

Josh Stanley

VENDOR OR AGENT

VENDOR OR AGENT

MAYOR OF SMYRNA, TENNESSEE

Town of Smyrna
Town Council Meeting
Agenda Summary

Agenda Item Number 5.b.
Department: Utilities
Date: July 14, 2026

Subject:
Approval of the terms of, and authorization for the Mayor to execute, contracts with vendors related to the annual bid of materials for Gas, Water & Sewer.

Fiscal Impact:
Dependent on the amount of materials we use and stock during FY27

Contract Type:
Original Contract

Contract Term (if applicable):
July 1, 2026 - June 30, 2027

Background:
This is our annual bid of materials we do each year for gas, water & sewer materials to lock in the price for the entire year. We receive a unit price per item in each category and the quantity needed determines overall cost. We have included the bid tab and exceptions sheet. There will be multiple contracts with the winning bidders. We are still working through a couple of exceptions to make sure they meet our specifications, so these could change slightly prior to the meeting.

Summary:
Gas, water & sewer annual bid of materials to lock in pricing for FY27

Recommended Council Action:
Staff recommends approval of vendor contracts for the gas, water & sewer annual bid of materials.

Attachments:
1. 2026-2027 Bid Explanations
2. Gas Meter Bid Tab FY27
3. Gas Material Bid Tab FY27
4. Water Materials Bid Tab FY27
5. Sewer Materials Bid Tab FY27
6. Citco Water

7. Consolidated Pipe & Supply Company Inc
8. Core & Main
9. Ed Young Sales Co Inc
10. Equipment Controls Company
11. Ferguson Waterworks
12. Fortiline Waterworks
13. G & C Supply Co Inc
14. Hayes Pipe Supply Inc
15. Irby Utilities
16. Kerotest Manufacturing Corp
17. MarieCo LLC
18. Richards Mfg Co Sales LLC
19. Southern Pipe & Supply
20. United Systems and Software
21. Badger Meter Inc
22. CGS Utility Products

2026/2027 Material Bid Explanations

When awarding bids, a number of factors must be considered due to unstable market conditions and fluctuating manufacturing costs affecting water, sewer and gas materials. These factors include, but are not limited to, lead times and pricing.

Gas Meter Bid Tabulation:

Diaphragm Gas Meters

G-15 thru G-19: MarieCo. bid a full section with a lower cost, but they were refurbished meters. Therefore, Ed Young Sales Company was awarded the bid.

Residential Regulators

G-63 thru G-64: MarieCo. had a lower bid, but didn't provide the needed spec. sheet for their noted difference. Therefore, Ed Young Sales was awarded the bid.

Gas Materials Bid Tabulation:

Lycofit Fittings

G-160 thru G-172: G&C Supply had the lowest bid with an incomplete section. CGS has the lowest bid with a complete section. Therefore, CGS was awarded the bid.

Dresser Couplings

G-207 thru G-216: G&C Supply had the lowest bid with an incomplete section. Irby Utilities has the lowest bid with a complete section. Therefore, Irby Utilities was awarded the bid.

Sewer Materials Bid Tabulation:

Pipe

S-71 thru S-93: All bid sections were incomplete. Ferguson Waterworks had the lowest bid on all of our new spec. sewer pipe. They also guaranteed pricing for the year. Therefore, Ferguson Waterworks was awarded the bid.

Water Materials Bid Tabulation:

Meter Boxes and Lids

W-48 thru W-55: Citco Water had the lowest bid, but didn't supply spec. sheets for their exemptions. Therefore, Southern Pipe was awarded the bid.

Valves

W-423 thru W-431: Citco Water had the lowest bid, but didn't supply spec. sheets for their exemptions.Therefore, Southern Pipe was awarded the bid.

Smyrna
Celebrating 250 Years of American Independence

Gas Meter Bid List - FY 26-27

HIGHLIGHTED = RECOMMENDED AWARD

Prefabricated Gas Rotary Meter Sets

Item Number	DESCRIPTION	SIZE	Estimated BID QTY.	Ed Young Sales Company UNIT PRICE	Cost	Estimated delivery date	Equipment Controls Company UNIT PRICE	Cost	Estimated delivery date	Measurement Controls of the Carolinas, LLC UNIT PRICE	Cost	Estimated delivery date	MARIECO UNIT PRICE	Cost	Estimated delivery date	United Systems & Software UNIT PRICE	Cost	Estimated delivery date	Richards Manufacturing UNIT PRICE	Cost	Estimated delivery date	Consolidated Pipe & Supply UNIT PRICE	Cost	Estimated delivery date
7	METER SET; 3.5M ROTARY METER SET - WITHOUT METER/EVC	3.5M/3M	6	no bid			no bid			no bid			$4,309.00	$25,854.00	8-10 weeks	no bid			$4,624.64	$27,747.84	8 weeks		$0.00	
8	METER SET; 5.5M ROTARY METER SET - WITHOUT METER/EVC	5.5M/5M	2	no bid			no bid			no bid			$4,625.00	$9,250.00	8-10 weeks	no bid			$4,673.28	$9,346.56	8 weeks		$0.00	
9	METER SET; 9 M ROTARY METER SET - WITHOUT METER/EVC	9M/7M	2	no bid			no bid			no bid			$4,625.00	$9,250.00	8-10 weeks	no bid			$5,159.96	$10,319.92	8 weeks		$0.00	
10	METER SET; 14 M ROTARY METER SET - WITHOUT METER/EVC	14M/11-16M	3	no bid			no bid			no bid			$5,000.00	$15,000.00	8-10 weeks				$5,135.15	$15,405.45	8 weeks		$0.00	
			Totals		$0.00			$0.00			$0.00			$59,354.00			$0.00			$62,819.77			$0.00	

Diaphram Gas Meters

Item Number	DESCRIPTION	SIZE	Estimated BID QTY.	Ed Young Sales Company UNIT PRICE	Cost	Estimated delivery date	Equipment Controls Company UNIT PRICE	Cost	Estimated delivery date	Measurement Controls of the Carolinas, LLC UNIT PRICE	Cost	Estimated delivery date	MARIECO UNIT PRICE	Cost	Estimated delivery date	United Systems & Software UNIT PRICE	Cost	Estimated delivery date	Richards Manufacturing UNIT PRICE	Cost	Estimated delivery date	Consolidated Pipe & Supply UNIT PRICE	Cost	Estimated delivery date
15	METERS, AC 250 TC; ELSTER/AMERICAN - 5# CASE, 4 DIGIT ODM. INDEX; 20LT	AC 250	250	$173.95	$43,487.50	8-10 weeks	$141.94	$35,485.00	9 weeks aro	$72.65	$18,162.50	4-6 weeks	$70.00	$17,500.00	6-8 weeks	no bid			no bid					
16	METERS, AL 425 TC; ELSTER/AMERICAN - 10# CASE, 4 DIGIT ODM.INDEX; 30LT	AL 425	150	$514.79	$77,218.50	8-10 weeks	no bid			no bid			$325.00	$48,750.00	6-8 weeks	no bid			no bid					
17	METERS, AC 630 TC; ELSTER/AMERICAN - 25# CASE, 4 DIGIT ODM. INDEX; 45 LT	AC 630	12	$1,150.30	$13,803.60	8-10 weeks	$975.90	$11,710.80	4-6 weeks aro	$655.00	$7,860.00	as we have in stock	$600.00	$7,200.00	6-8 weeks	no bid			no bid					
18	METERS, AL 800 TC; ELSTER/AMERICAN - 20# CASE, 5 DIGIT ODM. INDEX; 45 LT	AL 800	4	$1,917.39	$7,669.56	8-10 weeks	$1,202.35	$4,809.40	4-6 weeks aro	$909.50	$3,638.00	as we have in stock	$750.00	$3,000.00	6-8 weeks	no bid			no bid					
19	METERS, AL 1000 TC; ELSTER AMERICAN - 25# CASE, 5 DIGIT ODM. INDEX; 45 LT	AL 1000	2	$2,117.70	$4,235.40	8-10 weeks	no bid			$939.50	$1,879.00	4-6 weeks	$950.00	$1,900.00	6-8 weeks	no bid			no bid					
	Incomplete section		Totals		$146,414.56			$52,005.20			$31,539.50			$78,350.00			$0.00			$0.00			$0.00	

Rotary Gas Meters

Item Number	DESCRIPTION	SIZE	Estimated BID QTY.	Ed Young Sales Company UNIT PRICE	Cost	Estimated delivery date	Equipment Controls Company UNIT PRICE	Cost	Estimated delivery date	Measurement Controls of the Carolinas, LLC UNIT PRICE	Cost	Estimated delivery date	MARIECO UNIT PRICE	Cost	Estimated delivery date	United Systems & Software UNIT PRICE	Cost	Estimated delivery date	Richards Manufacturing UNIT PRICE	Cost	Estimated delivery date	Consolidated Pipe & Supply UNIT PRICE	Cost	Estimated delivery date
23	3.5M RABO/ROOTS ROTARY METER,W/TCI INDEX, 5 DIGIT, CCF,THERMO-WELL W/GASKET AND BOLT INTSALL KIT,GASKET STRAINER,FULL FACE,RUBBER W/SS 40 MESH	3.5M/3M	6	$3,640.50	$21,843.00	3-4 weeks	no bid			no bid			$3,130.00	$18,780.00	in stock	no bid			no bid					
24	5.5M RABO/ROOTS ROTARY METER,W/TCI INDEX,5 DIGIT CCF ,THERMO-WELLW/GASKET AND BOLT INSTALL KIT,GASKET STRAINER,FULL FACE,RUBBER W/SS 40 MESH	5.5M/5M	2	$4,366.14	$8,732.28	3-4 weeks	no bid			no bid			$3,790.00	$7,580.00	in stock	no bid			no bid					
25	9 M RABO/ROOTS ROTARY METER, W/TCI INDEX ,5 DIGIT CCF,THERMO-WELL W/GASKET AND BOLT INSTALL KIT,GASKET STRAINER,FULL FACE,RUBBER W/SS 40 MESH	9M/7M	2	$5,087.57	$10,175.14	3-4 weeks	no bid			no bid			$4,708.00	$9,416.00	in stock	no bid			no bid					
26	14 M RABO/ROOTS ROTARY METER,W/TCI INDEX,5 DIGIT CCF ,THERMO-WELL W/ GASKET AND BOLT INSTALL KIT,GASKET STRAINER,FULL FACE,RUBBER W/SS 40 MESH	14M/11M	1	$5,831.57	$5,831.57	3-4 weeks	no bid			no bid			$5,865.00	$5,865.00	in stock	no bid			no bid					
26A	16M RABO/ROOTS ROTARY METER,W/TCI INDEX, 5 DIGIT, CCF,THERMO-WELL W/GASKET AND BOLT INTSALL KIT,GASKET STRAINER,FULL FACE,RUBBER W/SS 40 MESH	16M	2				no bid			no bid			$7,978.00	$15,956.00	in stock	no bid			no bid					
	* ALL ROTARY METERS SHALL COME WITH AMR MOUNTING BRACKET																							
	Incomplete section		Totals		$46,581.99			$0.00			$0.00			$57,597.00			$0.00			$0.00			$0.00	

Turbine Gas Meters

Item Number	DESCRIPTION	SIZE	Estimated BID QTY.	Ed Young Sales Company UNIT PRICE	Cost	Estimated delivery date	Equipment Controls Company UNIT PRICE	Cost	Estimated delivery date	Measurement Controls of the Carolinas, LLC UNIT PRICE	Cost	Estimated delivery date	MARIECO UNIT PRICE	Cost	Estimated delivery date	United Systems & Software UNIT PRICE	Cost	Estimated delivery date	Richards Manufacturing UNIT PRICE	Cost	Estimated delivery date	Consolidated Pipe & Supply UNIT PRICE	Cost	Estimated delivery date
27	METER, SENSUS T-18	4"	1	no bid			$12,925.17	$12,925.17	36 weeks aro	no bid			no bid			no bid			no bid					
28	METER, SENSUS AAT -18	4"	1	no bid			$22,582.41	$22,582.41	36 weeks aro	no bid			no bid			no bid			no bid					
29	METER, SENSUS AAT - 27	6"	1	no bid			$24,840.81	$24,840.81	36 weeks aro	no bid			no bid			no bid			no bid					
30	METER, SENSUS AAT - 57	6"	1	no bid			$27,158.18	$27,158.18	36 weeks aro	no bid			no bid			no bid			no bid					
31	METER; SENSUS AAT-60	8"	1	no bid			$30,477.82	$30,477.82	36 weeks aro	no bid			no bid			no bid			no bid					
	Incomplete section		Totals		$0.00			$117,984.39			$0.00			$0.00			$0.00			$0.00			$0.00	

Electronic Correctors

Item Number	DESCRIPTION	SIZE	Estimated BID QTY.	Ed Young Sales Company UNIT PRICE	Cost	Estimated delivery date	Equipment Controls Company UNIT PRICE	Cost	Estimated delivery date	Measurement Controls of the Carolinas, LLC UNIT PRICE	Cost	Estimated delivery date	MARIECO UNIT PRICE	Cost	Estimated delivery date	United Systems & Software UNIT PRICE	Cost	Estimated delivery date	Richards Manufacturing UNIT PRICE	Cost	Estimated delivery date	Consolidated Pipe & Supply UNIT PRICE	Cost	Estimated delivery date
37	HONEYWELL EC-350 CORRECTOR W/10' DRIVE, 0-60PSI PRESSURE & TEMP		3	$3,062.59	$9,187.77	12-14 weeks aro	$2,556.30	$7,668.90	8-10 weeks aro	no bid			no bid			no bid			no bid					
38	HONEYWELL EC-350 CORRECTOR W/100' DRIVE, 0-300PSI PRESSURE & TEMP		1	$3,062.59	$3,062.59	12-14 weeks aro	$2,556.30	$2,556.30	8-10 weeks aro	no bid			no bid			no bid			no bid					
39	HONEYWELL TC-INDEX, FOR AMCO C-BODY ROTARY METERS		1	$1,167.84	$1,167.84	8-10 weeks aro	no bid			no bid			no bid			no bid			no bid					
40	HONEYWELL TC-INDEX, FOR ROOTS B3 & ROMET 3000 ROTARY METERS		1	$1,186.91	$1,186.91	8-10 weeks aro	no bid			no bid			no bid			no bid			no bid					
41	HONEYWELL TC-INDEX, FOR ROOTS B5 & ROMET 5000 ROTARY METERS		1	$1,186.91	$1,186.91	8-10 weeks aro	no bid			no bid			no bid			no bid			no bid					
42	HONEYWELL TC-INDEX, FOR RABO ROTARY METERS		1	$1,167.84	$1,167.84	8-10 weeks aro	no bid			no bid			no bid			no bid			no bid					
43	HONEYWELL TURBO CORRECTOR		1	$7,047.17	$7,047.17	12-14 weeks aro	no bid			no bid			no bid			no bid			no bid					
	Incomplete section		Totals		$24,007.03			$10,225.20			$0.00			$0.00			$0.00			$0.00			$0.00	

Meter Bars

Item Number	DESCRIPTION	SIZE	Estimated BID QTY.	Ed Young Sales Company UNIT PRICE	Cost	Estimated delivery date	Equipment Controls Company UNIT PRICE	Cost	Estimated delivery date	Measurement Controls of the Carolinas, LLC UNIT PRICE	Cost	Estimated delivery date	MARIECO UNIT PRICE	Cost	Estimated delivery date	United Systems & Software UNIT PRICE	Cost	Estimated delivery date	Richards Manufacturing UNIT PRICE	Cost	Estimated delivery date	Consolidated Pipe & Supply UNIT PRICE	Cost	Estimated delivery date
44	1" METER BARS 20LT AC-250 METERS	1" 20 LT	250	$155.49	$38,872.50	14-16 weeks aro	$96.03	$24,007.50	10-12 weeks aro	no bid			no bid			no bid			$84.25	$21,062.50	4-6 weeks			
45	1.25" METER BARS 30LT AL-425 METERS	1.25" 30LT	150	$156.28	$23,442.00	14-16 weeks aro	$104.63	$15,694.50	10-12 weeks aro	no bid			no bid			no bid			$90.67	$13,600.50	4-6 weeks			
50	METER BAR - METER BYPASS FOR AL-800 OR AL-1000 - 45 LT	45LT	4	$854.24	$3,416.96	14-16 weeks aro	$658.00	$2,632.00	10-12 weeks aro	no bid			no bid			no bid			$683.49	$2,733.96	4-6 weeks			
51	METER BAR - METER BYPASS FOR AC-630 - 45 LT	45LT	2	$591.25	$1,182.50	14-16 weeks aro	$476.00	$952.00	10-12 weeks aro	no bid			no bid			no bid			$495.46	$990.92	4-6 weeks			
52	METER BAR - METER BYPASS FOR AL-425 - 30 LT	30LT	2	$554.25	$1,108.50	14-16 weeks aro	$615.12	$1,230.24	10-12 weeks aro	no bid			no bid			no bid			$639.60	$1,279.20	4-6 weeks			
	Incomplete section		Totals		$68,022.46			$44,516.24			$0.00			$0.00			$0.00			$39,667.08			$0.00	

Meter Manifolds

Item Number	DESCRIPTION	SIZE	Estimated BID QTY.	Ed Young Sales Company UNIT PRICE	Cost	Estimated delivery date	Equipment Controls Company UNIT PRICE	Cost	Estimated delivery date	Measurement Controls of the Carolinas, LLC UNIT PRICE	Cost	Estimated delivery date	MARIECO UNIT PRICE	Cost	Estimated delivery date	United Systems & Software UNIT PRICE	Cost	Estimated delivery date	Richards Manufacturing UNIT PRICE	Cost	Estimated delivery date	Consolidated Pipe & Supply UNIT PRICE	Cost	Estimated delivery date
54	METER BAR - TWO METER MANIFOLD		1	$313.46	$313.46	14-16 weeks aro	$272.00	$272.00	10-12 weeks aro	no bid			no bid			no bid			$281.26	$281.26	4-6 weeks			
55	METER BAR - THREE METER MANIFOLD		1	$360.50	$360.50	14-16 weeks aro	$317.00	$317.00	10-12 weeks aro	no bid			no bid			no bid			$328.12	$328.12	4-6 weeks			
56	METER BAR - FOUR METER MANIFOLD		1	$399.79	$399.79	14-16 weeks aro	$381.25	$381.25	10-12 weeks aro	no bid			no bid			no bid			$394.59	$394.59	4-6 weeks			
57	METER BAR - FIVE METER MANIFOLD		1	$439.18	$439.18	14-16 weeks aro	$465.80	$465.80	10-12 weeks aro	no bid			no bid			no bid			$482.10	$482.10	4-6 weeks			
58	METER BAR - SIX METER MANIFOLD		1	$461.50	$461.50	14-16 weeks aro	$158.66	$158.66	10-12 weeks aro	no bid			no bid			no bid			$578.51	$578.51	4-6 weeks			
	Incomplete section		Totals		$1,974.43			$1,594.71			$0.00			$0.00			$0.00			$2,064.58			$0.00	

Residential Regulators

Item Number	DESCRIPTION	SIZE	Estimated BID QTY.	Ed Young Sales Company UNIT PRICE	Cost	Estimated delivery date	Equipment Controls Company UNIT PRICE	Cost	Estimated delivery date	Measurement Controls of the Carolinas, LLC UNIT PRICE	Cost	Estimated delivery date	MARIECO UNIT PRICE	Cost	Estimated delivery date	United Systems & Software UNIT PRICE	Cost	Estimated delivery date	Richards Manufacturing UNIT PRICE	Cost	Estimated delivery date	Consolidated Pipe & Supply UNIT PRICE	Cost	Estimated delivery date
63	REGULATOR; SENSUS/AMERCIAN	3/4" X 1"	200	$46.52	$9,304.00	18-20 weeks	$64.71	$12,942.00	11-12 weeks aro	no bid			$40.00	$8,000.00	see note	no bid			no bid					
64	REGULATOR; SENSUS/AMERICAN	1" x 1"	50	$46.52	$2,326.00	18-20 weeks	$64.71	$3,235.50	11-12 weeks aro	no bid			$40.00	$2,000.00	in stock	no bid			no bid					
	Incomplete section		Totals		$11,630.00			$16,177.50			$0.00			$10,000.00			$0.00			$0.00			$0.00	

Commercial Regulators

Item Number	DESCRIPTION	SIZE	Estimated BID QTY.	Ed Young Sales Company UNIT PRICE	Cost	Estimated delivery date	Equipment Controls Company UNIT PRICE	Cost	Estimated delivery date	Measurement Controls of the Carolinas, LLC UNIT PRICE	Cost	Estimated delivery date	MARIECO UNIT PRICE	Cost	Estimated delivery date	United Systems & Software UNIT PRICE	Cost	Estimated delivery date	Richards Manufacturing UNIT PRICE	Cost	Estimated delivery date	Consolidated Pipe & Supply UNIT PRICE	Cost	Estimated delivery date
68	REGULATOR; FISHER	2"	5	no bid			no bid			no bid			no bid			no bid			No Bid					
69	REGULATOR; FISHER	2"	4	no bid			no bid			no bid			no bid			no bid			No Bid					
71	REGULATOR;FISHER HIGH CAP RELEIF 2.5"VENT	2"	4	no bid			no bid			no bid			no bid						No Bid					
			Totals		$0.00			$0.00			$0.00			$0.00			$0.00			$0.00			$0.00	

Farm Tap Regulators/Reliefs

Item Number	DESCRIPTION	SIZE	Estimated BID QTY.	Ed Young Sales Company UNIT PRICE	Cost	Estimated delivery date	Equipment Controls Company UNIT PRICE	Cost	Estimated delivery date	Measurement Controls of the Carolinas, LLC UNIT PRICE	Cost	Estimated delivery date	MARIECO UNIT PRICE	Cost	Estimated delivery date	United Systems & Software UNIT PRICE	Cost	Estimated delivery date	Richards Manufacturing UNIT PRICE	Cost	Estimated delivery date	Consolidated Pipe & Supply UNIT PRICE	Cost	Estimated delivery date
75	REGULATOR, FARM TAP; FISHER/BELGAS	3/4"	1	no bid			no bid			no bid			$460.00	$460.00	6-8 weeks aro	no bid			no bid					
76	REGULATOR; RELIEF; FISHER/BELGAS	1"	1	no bid			no bid			no bid			$299.00	$299.00	6-8 weeks aro	no bid			no bid					
			Totals		$0.00			$0.00			$0.00			$759.00			$0.00			$0.00			$0.00	

Modules

Item Number	DESCRIPTION	SIZE	Estimated BID QTY.	Ed Young Sales Company UNIT PRICE	Cost	Estimated delivery date	Equipment Controls Company UNIT PRICE	Cost	Estimated delivery date	Measurement Controls of the Carolinas, LLC UNIT PRICE	Cost	Estimated delivery date	MARIECO UNIT PRICE	Cost	Estimated delivery date	United Systems & Software UNIT PRICE	Cost	Estimated delivery date	Richards Manufacturing UNIT PRICE	Cost	Estimated delivery date	Consolidated Pipe & Supply UNIT PRICE	Cost	Estimated delivery date
81	ITRON MODULE FOR TOP MOUNT METERS		20	no bid			no bid			no bid			$110.00	$2,200.00	6-8 weeks aro	$180.00	$3,600.00	12 weeks	no bid					
82	ITRON MODULE FOR AC 250-630 ,AL 425		250	no bid			no bid			no bid			$65.00	$16,250.00	6-8 weeks aro	$98.00	$24,500.00	12 weeks	no bid					
83	ITRON MODULE SENSUS 275		250	no bid			no bid			no bid			$65.00	$16,250.00	6-8 weeks aro	$98.00	$24,500.00	12 weeks	no bid					
84	ITRON MODULE SENSUS 415		150	no bid			no bid			no bid			$65.00	$9,750.00	6-8 weeks aro	$98.00	$14,700.00	12 weeks	no bid					
85	ITRON MODULE FOR REMOTE MOUNT METERS W/ TCI		20	no bid			no bid			no bid			no bid			$180.00	$3,600.00	12 weeks	no bid					
			Totals		$0.00			$0.00			$0.00			$44,450.00			$70,900.00			$0.00			$0.00	

Celebrating 250 Years of American Independence

Gas Material Bid FY 26-27

HIGHLIGHTED = RECOMMENDED AWARD

Meter Risers

Item Number	DESCRIPTION	SIZE	Estimated Bid Qty	Vendor Unit Price	Cost	CGS Unit Price	Cost	Estimated delivery time	Equip Controls Unit Price	Cost	Estimated delivery time	MARIECO Unit Price	Cost	Estimated delivery time	G&C Supply Unit Price	Cost	Estimated delivery time	Kerotest Mfg Unit Price	Cost	Estimated delivery time	Consolidated Pipe Unit Price	Cost	Estimated delivery time	IRBY UTILITIES Unit Price	Cost	Estimated delivery time	Ferguson Waterworks Unit Price	Cost	Estimated delivery time
89	RISER, ANODELESS, 36V X 24H, ELSTER PERFECTION	3/4" X 3/4"	300		$0.00	no bid			no bid			$70.00	$21,000.00	6-8 weeks aro	$40.38	$12,114.00	stock	no bid			$34.50	$10,350.00	stock	no bid			no bid		
90	RISER, ANODELESS, ELSTER PERFECTION	1" X 1"	30		$0.00	no bid			no bid			$90.00	$2,700.00	6-8 weeks aro	$48.20	$1,446.00	stock	no bid			$47.50	$1,425.00	stock	no bid			no bid		
92	RISER, ANODELESS, ELSTER PERFECTION,	2" X 2"	30		$0.00	no bid			no bid			$290.00	$8,700.00	in stock	$172.50	$5,175.00	stock	no bid			$158.00	$4,740.00		no bid			no bid		
	Incomplete section				$0.00		$0.00			$0.00			$32,400.00			$18,735.00			$0.00			$16,515.00			$0.00			

Cutoffs

Item Number	DESCRIPTION	SIZE	Estimated Bid Qty	Unit Price	Cost	CGS Unit Price	Cost	Estimated delivery time	Equip Controls Unit Price	Cost	Estimated delivery time	MARIECO Unit Price	Cost	Estimated delivery time	G&C Supply Unit Price	Cost	Estimated delivery time	Kerotest Mfg Unit Price	Cost	Estimated delivery time	Consolidated Pipe Unit Price	Cost	Estimated delivery time	IRBY UTILITIES Unit Price	Cost	Estimated delivery time	Ferguson Waterworks Unit Price	Cost	Estimated delivery time
96	STOPCOCK;JOMAR 241-004D	3/4"	300			$42.05	$12,615.00	2 weeks	no bid			no bid			$50.46	$15,138.00	2-4 weeks	no bid			$35.50	$10,650.00	stock or 1-2 weeks	no bid			no bid		
97	STOPCOCK; HIGH PRESSURE, MUELLER	3/4"	10		$0.00	no bid			no bid			no bid			$130.27	$1,302.70	stock	no bid			$121.08	$1,210.80	stock or 1-2 weeks	no bid			no bid		
98	STOPCOCK;JOMAR 240-005B STRAIGHT	1"	30		$0.00	$38.25	$1,147.50	2 weeks	no bid			no bid			$45.14	$1,354.20	2-4 weeks	no bid			$36.70	$1,101.00	stock or 1-2 weeks	no bid			no bid		
99	STOPCOCK; JOMAR 241-005D	1"	40		$0.00	$56.16	$2,246.40	2 weeks	no bid			no bid			$71.61	$2,864.40	2-4 weeks	no bid			$52.90	$2,116.00	stock or 1-2 weeks	no bid			no bid		
100	STOPCOCK; 175 MAOP MUELLER	1 1/4"	10		$0.00	no bid			no bid			no bid			$54.91	$549.10	stock	no bid			$50.84	$508.40	stock or 1-2 weeks	no bid			no bid		
101	STOPCOCK; 175 MAOP MCDONALD	1 1/2"	10		$0.00	no bid			no bid			no bid			$78.91	$789.10	stock	no bid			$78.34	$783.40	stock or 1-2 weeks	no bid			no bid		
102	STOPCOCK; 175 MAOP MUELLER	2"	30		$0.00	no bid			no bid			no bid			$93.00	$2,790.00	stock	no bid			$85.11	$2,553.30	stock or 1-2 weeks	no bid			no bid		
	Incomplete section		Totals		$0.00		$16,008.90			$0.00			$0.00			$24,787.50			$0.00			$18,922.90			$0.00			$0.00	

Polyethylene Pipe

Item Number	DESCRIPTION	SIZE	Estimated Bid Qty	Unit Price	Cost	CGS Unit Price	Cost	Estimated delivery time	Equip Controls Unit Price	Cost	Estimated delivery time	MARIECO Unit Price	Cost	Estimated delivery time	G&C Supply Unit Price	Cost	Estimated delivery time	Kerotest Mfg Unit Price	Cost	Estimated delivery time	Consolidated Pipe Unit Price	Cost	Estimated delivery time	IRBY UTILITIES Unit Price	Cost	Estimated delivery time	Ferguson Waterworks Unit Price	Cost	Estimated delivery time
107	PIPE; HIGH DENSITY 8300 4710 BLK/YELLOW STRIPE-SDR-11 (500 FT ROLLS)	3/4"	20000		$0.00	no bid			no bid			no bid			no bid			no bid			$0.64	$12,800.00	stock	no bid			no bid		
108	PIPE; HIGH DENSITY 8300 4710 BLK/YELLOW STRIPE-SDR-11(500 FT ROLLS)	1"	3000		$0.00	no bid			no bid			no bid			no bid			no bid			$0.96	$2,880.00	stock	no bid			no bid		
109	PIPE; HIGH DENSITY 8300 4710 BLK/YELLOW STRIPE -SDR-11(500 FT ROLLS)	1 1/4"	350		$0.00	no bid			no bid			no bid			no bid			no bid			$1.22	$427.00	stock	no bid			no bid		
110	PIPE; HIGH DENSITY 8300 4710 BLK/YELLOW STRIPE-SDR-11 (500 FT ROLLS)	2"	15000		$0.00	no bid			no bid			no bid			no bid			no bid			$1.58	$23,700.00	stock	no bid			no bid		
111	PIPE; HIGH DENISTY 8300 4710 BLK/YELLOW STRIPE -SDR-11(40 FT PER SECTION)	3"	200		$0.00	no bid			no bid			no bid			no bid			no bid			$3.48	$696.00	stock	no bid			no bid		
112	PIPE; HIGH DENSITY 8300 4710 BLK/YELLOW STRIPE-SDR-11(40 FT PER SECTION)	4"	5000		$0.00	no bid			no bid			no bid			no bid			no bid			$5.77	$28,850.00	stock	no bid			no bid		
113	PIPE; HIGH DENSITY 8300 4710 BLK/YELLOW STRIPE -SDR-11(40 FT PER SECTION)	6"	2000		$0.00	no bid			no bid			no bid			no bid			no bid			$12.80	$25,600.00	stock	no bid			no bid		
	Incomplete section		Totals		$0.00		$0.00			$0.00			$0.00			$0.00			$0.00			$94,953.00			$0.00			$0.00	

Polyethylene Fittings

Item Number	DESCRIPTION	SIZE	Estimated Bid Qty	Unit Price	Cost	CGS Unit Price	Cost	Estimated delivery time	Equip Controls Unit Price	Cost	Estimated delivery time	MARIECO Unit Price	Cost	Estimated delivery time	G&C Supply Unit Price	Cost	Estimated delivery time	Kerotest Mfg Unit Price	Cost	Estimated delivery time	Consolidated Pipe Unit Price	Cost	Estimated delivery time	IRBY UTILITIES Unit Price	Cost	Estimated delivery time	Ferguson Waterworks Unit Price	Cost	Estimated delivery time
118	CAP; BUTT FUSE HIGH DENSITY 8100 4710	3/4"	100		$0.00	no bid			no bid			no bid			$3.68	$368.00	stock	no bid			$2.80	$280.00	stock	no bid			no bid		
119	CAP; BUTT FUSE HIGH DENSITY 8100 4710	1"	15		$0.00	no bid			no bid			no bid			$3.83	$57.45	stock	no bid			$5.00	$75.00	stock	no bid			no bid		
121	CAP; BUTT FUSE HIGH DENSITY8100 4710	2"	40		$0.00	no bid			no bid			no bid			$2.90	$116.00	stock	no bid			$2.30	$92.00	stock	no bid			no bid		
122	CAP; BUTT FUSE HIGH DENSITY 8100 4710	3"	10		$0.00	no bid			no bid			no bid			$5.68	$56.80	stock	no bid			$6.40	$64.00	stock	no bid			no bid		
123	CAP; BUTT FUSE HIGH DENSITY 8100 4710	4"	25		$0.00	no bid			no bid			no bid			$11.11	$277.75	stock	no bid			$9.98	$249.50	stock	no bid			no bid		
124	CAP; BUTT FUSE HIGH DENSITY 8100 4710	6"	10		$0.00	no bid			no bid			no bid			$29.27	$292.70	2 weeks	no bid			$24.00	$240.00	stock	no bid			no bid		
125	REDUCER; BUTT FUSE HIGH DENSITY 8100 4710	1" X 1/2"	5		$0.00	no bid			no bid			no bid			$5.93	$29.65	stock	no bid			$4.12	$20.60	stock	no bid			no bid		
126	REDUCER; BUTT FUSE HIGH DENSITY 8100 4710	1" X 3/4"	10		$0.00	no bid			no bid			no bid			$4.86	$48.60	stock	no bid			$4.78	$47.80	stock	no bid			no bid		
127	REDUCER; BUTT FUSE HIGH DENSITY 8100 4710	1 1/4" X 1"	10		$0.00	no bid			no bid			no bid			$5.69	$56.90	stock	no bid			$5.10	$51.00	stock	no bid			no bid		
128	REDUCER; BUTT FUSE HIGH DENISTY 8100 4710	2" X 1"	10		$0.00	no bid			no bid			no bid			$5.88	$58.80	stock	no bid			$5.90	$59.00	stock	no bid			no bid		
129	REDUCER; BUTT FUSE HIGH DENSITY 8100 4710	2" X 1 1/4"	10		$0.00	no bid			no bid			no bid			$6.29	$62.90	stock	no bid			$5.90	$59.00	stock	no bid			no bid		
130	REDUCER; BUTT FUSE HIGH DENSITY 8100 4710	3" X 2"	10		$0.00	no bid			no bid			no bid			$8.17	$81.70	stock	no bid			$8.01	$80.10	stock	no bid			no bid		
131	REDUCER; BUTT FUSE HIGH DENSITY 8100 4710	6" X 4"	10		$0.00	no bid			no bid			no bid			$27.74	$277.40	stock	no bid			$27.00	$270.00	stock	no bid			no bid		
132	REDUCER; BUTT FUSE HIGH DENSITY 8100 4710	4" X 3"	6		$0.00	no bid			no bid			no bid			$13.10	$78.60	stock	no bid			$10.60	$63.60	stock	no bid			no bid		
133	REDUCER; BUTT FUSE HIGH DENSITY 8100 4710	4" X 2"	25		$0.00	no bid			no bid			no bid			$11.38	$284.50	2 weeks	no bid			$9.10	$227.50	stock	no bid			no bid		
134	TEE; HIGH DENSITY 8100 4710	3/4"	30		$0.00	no bid			no bid			no bid			$5.38	$161.40	stock	no bid			$4.80	$144.00	stock	no bid			no bid		
135	TEE; HIGH DENSITY 8100 4710	1"	20		$0.00	no bid			no bid			no bid			$5.98	$119.60	stock	no bid			$5.10	$102.00	stock	no bid			no bid		
136	TEE; HIGH DENSITY 8100 4710	1 1/4"	4		$0.00	no bid			no bid			no bid			$8.43	$33.72	stock	no bid			$7.90	$31.60	stock	no bid			no bid		
137	TEE; HIGH DENSITY 8100 4710	2"	20		$0.00	no bid			no bid			no bid			$8.09	$161.80	stock	no bid			$7.09	$141.80	stock	no bid			no bid		
138	TEE; HIGH DENSITY 8100 4710	3"	4		$0.00	no bid			no bid			no bid			$15.41	$61.64	stock	no bid			$15.78	$63.12	stock	no bid			no bid		
139	TEE; HIGH DENSITY8100 4710	4"	20		$0.00	no bid			no bid			no bid			$23.59	$471.80	2-4 weeks	no bid			$17.90	$358.00	stock	no bid			no bid		
140	TEE; HIGH DENSITY 8100 4710	6"	6		$0.00	no bid			no bid			no bid			$60.98	$365.88	4-6 weeks	no bid			$44.00	$264.00	stock	no bid			no bid		
141	ELBOW; 90 D HIGH DENSITY 8100 4710	2"	10		$0.00	no bid			no bid			no bid			$5.99	$59.90	stock	no bid			$4.90	$49.00	stock	no bid			no bid		
142	ELBOW; 90 D HIGH DENSITY 8100 4710	3"	10		$0.00	no bid			no bid			no bid			$12.72	$127.20	stock	no bid			$11.90	$119.00	stock	no bid			no bid		
143	ELBOW; 90 D HIGH DENSITY 8100 4710	4"	10		$0.00	no bid			no bid			no bid			$17.24	$172.40	4-6 weeks	no bid			$15.00	$150.00	stock	no bid			no bid		
144	ELBOW; 90 D HIGH DENSITY 8100 4710	6"	10		$0.00	no bid			no bid			no bid			$47.11	$471.10	4-6 weeks	no bid			$34.00	$340.00	stock	no bid			no bid		
145	ELBOW; 45 D HIGH DENSITY 8100 4710	4"	10		$0.00	no bid			no bid			no bid			no bid			no bid			$15.00	$150.00	stock	no bid			no bid		
	Incomplete section		Totals		$0.00		$0.00			$0.00			$0.00			$4,354.19			$0.00			$3,791.62			$0.00			$0.00	

Bolt on Steel Tapping Saddles

Item Number	DESCRIPTION	SIZE	Estimated Bid Qty	Unit Price	Cost	CGS Unit Price	Cost	Estimated delivery time	Equip Controls Unit Price	Cost	Estimated delivery time	MARIECO Unit Price	Cost	Estimated delivery time	G&C Supply Unit Price	Cost	Estimated delivery time	Kerotest Mfg Unit Price	Cost	Estimated delivery time	Consolidated Pipe Unit Price	Cost	Estimated delivery time	IRBY UTILITIES Unit Price	Cost	Estimated delivery time	Ferguson Waterworks Unit Price	Cost	Estimated delivery time
149	TAPPING SADDLE; STEEL, CONTINENTAL	1 1/4"	4		$0.00	no bid			no bid			no bid			$438.39	$1,753.56	stock	no bid			$226.13	$904.52	stock or 3-4 weeks	no bid			no bid		
150	TAPPING SADDLE; STEEL, CONTINENTAL	2" X 3/4"	4		$0.00	no bid			no bid			no bid			$389.15	$1,556.60	stock	no bid			$337.15	$1,348.60	stock or 3-4 weeks	no bid			no bid		
151	TAPPING SADDLE; STEEL, CONTINENTAL	2" X 1"	4		$0.00	no bid			no bid			no bid			$543.50	$2,174.00	stock	no bid			$261.50	$1,046.00	stock or 3-4 weeks	no bid			no bid		
152	TAPPING SADDLE; STEEL, CONTINENTAL	2 1/2" X 3/4"	4		$0.00	no bid			no bid			no bid			no bid			no bid			$10.02	$40.08	stock or 3-4 weeks	no bid			no bid		
153	TAPPING SADDLE; STEEL, CONTINENTAL	3" X 3/4"	4		$0.00	no bid			no bid			no bid			$504.84	$2,019.36	4 weeks	no bid			$268.90	$1,075.60	stock or 3-4 weeks	no bid			no bid		
154	TAPPING SADDLE; STEEL, CONTINENTAL	4" X 3/4"	4		$0.00	no bid			no bid			no bid			$577.64	$2,310.56	4-6 weeks	no bid			$271.16	$1,084.64	stock or 3-4 weeks	no bid			no bid		
155	TAPPING SADDLE; STEEL, CONTINENTAL	6" X 3/4"	4		$0.00	no bid			no bid			no bid			no bid			no bid			$429.11	$1,716.44	stock or 3-4 weeks	no bid			no bid		
	Incomplete section		Totals		$0.00		$0.00			$0.00			$0.00			$9,814.08			$0.00			$7,215.88			$0.00			$0.00	

Lycofit Fittings

Item Number	DESCRIPTION	SIZE	Estimated Bid Qty	Unit Price	Cost	CGS Unit Price	Cost	Estimated delivery time	Equip Controls Unit Price	Cost	Estimated delivery time	MARIECO Unit Price	Cost	Estimated delivery time	G&C Supply Unit Price	Cost	Estimated delivery time	Kerotest Mfg Unit Price	Cost	Estimated delivery time	Consolidated Pipe Unit Price	Cost	Estimated delivery time	IRBY UTILITIES Unit Price	Cost	Estimated delivery time	Ferguson Waterworks Unit Price	Cost	Estimated delivery time
160	REDUCER; LYCOFIT	3/4" X 1/2"	10		$0.00	$42.90	$429.00	3 weeks	no bid			no bid			$42.36	$423.60	2-4 weeks	no bid			$45.90	$459.00	stock or 3-4 weeks	no bid			no bid		
161	TEE; LYCOFIT	3/4"	25		$0.00	$74.66	$1,866.50	3 weeks	no bid			no bid			$60.70	$1,517.50	stock	no bid			$87.06	$2,176.50	stock or 3-4 weeks	no bid			no bid		
162	TEE; LYCOFIT	1"	20		$0.00	$80.49	$1,609.80	3 weeks	no bid			no bid			$55.07	$1,101.40	stock	no bid			$70.50	$1,410.00	stock or 3-4 weeks	no bid			no bid		
163	TEE; LYCOFIT	2"	20		$0.00	$81.10	$1,622.00	3 weeks	no bid			no bid			$130.70	$2,614.00	stock	no bid			$176.11	$3,522.20	stock or 3-4 weeks	no bid			no bid		
164	LYCO CAP	3/4"	50		$0.00	$30.59	$1,529.50	3 weeks	no bid			no bid			$21.44	$1,072.00	stock	no bid			$29.90	$1,495.00	stock or 3-4 weeks	no bid			no bid		
165	LYCO CAP	1"	20		$0.00	$32.75	$655.00	3 weeks	no bid			no bid			$39.41	$788.20	stock	no bid			$41.12	$822.40	stock or 3-4 weeks	no bid			no bid		
166	LYCO CAP	2"	10		$0.00	$88.22	$882.20	3 weeks	no bid			no bid			$85.28	$852.80	2 weeks	no bid			$93.15	$931.50	stock or 3-4 weeks	no bid			no bid		
167	COUPLING; LYCOFIT	3/4"	100		$0.00	$27.39	$2,739.00	3 weeks	no bid			no bid			$22.29	$2,229.00	stock	no bid			$30.04	$3,004.00	stock or 3-4 weeks	no bid			no bid		
168	COUPLING; LYCOFIT	1/2"	10		$0.00	$14.15	$141.50	3 weeks	no bid			no bid			$14.56	$145.60	2 weeks	no bid			$18.05	$180.50	stock or 3-4 weeks	no bid			no bid		
169	COUPLING; LYCOFIT	1"	50		$0.00	$30.82	$1,541.00	3 weeks	no bid			no bid			$20.04	$1,002.00	2 weeks	no bid			$19.13	$956.50	stock or 3-4 weeks	no bid			no bid		
170	COUPLING; LYCOFIT	1 1/4"	10		$0.00	$108.10	$1,081.00	3 weeks	no bid			no bid			no bid			no bid			$82.55	$825.50	stock or 3-4 weeks	no bid			no bid		
171	COUPLING; LYCOFIT	2"	40		$0.00	$115.36	$4,614.40	3 weeks	no bid			no bid			$118.70	$4,748.00	stock	no bid			$121.60	$4,864.00	stock or 3-4 weeks	no bid			no bid		
172	COUPLING; LYCOFIT REPAIR	2"	15		$0.00	$115.36	$1,730.40	3 weeks	no bid			no bid			$109.47	$1,642.05	stock	no bid			$94.66	$1,419.90	stock or 3-4 weeks	no bid			no bid		

		Incomplete section		Totals		$0.00		$20,441.30			$0.00			$0.00			$18,136.15			$0.00			$22,067.00			$0.00			$0.00	
Polyvalves																													
Item				Estimated			CGS		Estimated	Equip Controls		Estimated	MARIECO		Estimated	G&C Supply		Estimated	Kerotest Mfg		Estimated	Consolidated Pipe		Estimated	IRBY UTILITIES		Estimated	Ferguson Waterworks		Estimated
Number		DESCRIPTION	SIZE	Bid Qty	Unit Price	Cost	Unit Price	Cost	delivery time	Unit Price	Cost	delivery time	Unit Price	Cost	delivery time	Unit Price	Cost	delivery time	Unit Price	Cost	delivery time	Unit Price	Cost	delivery time	Unit Price	Cost	delivery time	Unit Price	Cost	delivery time
177		POLYVALVE; KEROTEST FULL PORT, 4710	1"	10		$0.00	no bid			no bid			no bid			$41.40	$414.00	stock	$37.00	$370.00	6-8 weeks	$45.00	$450.00	stock or 4-6 weeks	$48.68	$486.80	10-12 weeks	no bid	
178		POLYVALVE; KEROTEST FULL PORT, 4710	1 1/4"	5		$0.00	no bid			no bid			no bid			$32.40	$162.00	stock	$26.00	$130.00	6-8 weeks	$39.50	$197.50	stock or 4-6 weeks	$38.81	$194.05	10-12 weeks	no bid	
179		POLYVALVE; KEROTEST FULL PORT, 4710	2"	25		$0.00	no bid			no bid			no bid			$88.20	$2,205.00	stock	$79.00	$1,975.00	6-8 weeks	$77.00	$1,925.00	stock or 4-6 weeks	$93.04	$2,326.00	10-12 weeks	no bid	
180		POLYVALVE; KEROTEST FULL PORT, 4710	3"	5		$0.00	no bid			no bid			no bid			$198.00	$990.00	stock	$171.00	$855.00	6-8 weeks	$190.00	$950.00	stock or 4-6 weeks	$220.65	$1,103.25	10-12 weeks	no bid	
181		POLYVALVE; KEROTEST FULL PORT, 4710	4"	25		$0.00	no bid			no bid			no bid			$264.00	$6,600.00	stock	$234.00	$5,850.00	6-8 weeks	$261.00	$6,525.00	stock or 4-6 weeks	$292.50	$7,312.50	10-12 weeks	no bid	
182		POLYVALVE; KEROTEST FULL PORT, 4710	6"	5		$0.00	no bid			no bid			no bid			$586.80	$2,934.00	stock	$526.00	$2,630.00	6-8 weeks	$544.00	$2,720.00	stock or 4-6 weeks	$674.36	$3,371.80	10-12 weeks	no bid	
				Totals		$0.00		$0.00			$0.00			$0.00			$13,305.00			$11,810.00			$12,767.50			$14,794.40			$0.00	
Transition Fittings																													
Item				Estimated			CGS		Estimated	Equip Controls		Estimated	MARIECO		Estimated	G&C Supply		Estimated	Kerotest Mfg		Estimated	Consolidated Pipe		Estimated	IRBY UTILITIES		Estimated	Ferguson Waterworks		Estimated
Number		DESCRIPTION	SIZE	Bid Qty	Unit Price	Cost	Unit Price	Cost	delivery time	Unit Price	Cost	delivery time	Unit Price	Cost	delivery time	Unit Price	Cost	delivery time	Unit Price	Cost	delivery time	Unit Price	Cost	delivery time	Unit Price	Cost	delivery time	Unit Price	Cost	delivery time
187		TRANSITION FITTING; STEEL - ELSTER PERFECTION	3/4" X 1/2"	5		$0.00	no bid			no bid			no bid			no bid			no bid			$61.10	$305.50	stock or 5-6 weeks	no bid			no bid	
188		TRANSITION FITTING; STEEL - ELSTER PERFECTION	3/4" X 3/4"	5		$0.00	no bid			no bid			no bid			no bid			no bid			$22.00	$110.00	stock	no bid			no bid	
189		TRANSITION FITTING; STEEL - ELSTER PERFECTION	1" X 1"	5		$0.00	no bid			no bid			no bid			no bid			no bid			$30.50	$152.50	stock	no bid			no bid	
190		TRANSITION FITTING; STEEL - ELSTER PERFECTION	2" X 2"	5		$0.00	no bid			no bid			no bid			no bid			no bid			$56.20	$281.00	stock	no bid			no bid	
191		TRANSITION FITTING; STEEL - ELSTER PERFECTION	3" X 3"	5		$0.00	no bid			no bid			no bid			no bid			no bid			$81.55	$407.75	stock	no bid			no bid	
192		TRANSITION FITTING; STEEL - ELSTER PERFECTION	4" X 4"	5		$0.00	no bid			no bid			no bid			no bid			no bid			$129.40	$647.00	stock	no bid			no bid	
193		TRANSITION FITTING; STEEL - ELSTER PERFECTION	6" X 6"	5		$0.00	no bid			no bid			no bid			no bid			no bid			$339.00	$1,695.00	stock	no bid			no bid	
				Totals		$0.00		$0.00			$0.00			$0.00			$0.00			$0.00			$3,598.75			$0.00			$0.00	
Dresser Couplings																													
Item				Estimated			CGS		Estimated	Equip Controls		Estimated	MARIECO		Estimated	G&C Supply		Estimated	Kerotest Mfg		Estimated	Consolidated Pipe		Estimated	IRBY UTILITIES		Estimated	Ferguson Waterworks		Estimated
Number		DESCRIPTION	SIZE	Bid Qty	Unit Price	Cost	Unit Price	Cost	delivery time	Unit Price	Cost	delivery time	Unit Price	Cost	delivery time	Unit Price	Cost	delivery time	Unit Price	Cost	delivery time	Unit Price	Cost	delivery time	Unit Price	Cost	delivery time	Unit Price	Cost	delivery time
207		COUPLING; ARMORED COMPRESSION, DRESSER	3/4" X 6"	5		$0.00	no bid			no bid			$48.00	$240.00	2-4 weeks aro	$34.59	$172.95	stock	no bid			$44.84	$224.20	stock or 4-5 weeks	$35.47	$177.35	3-4 weeks	no bid	
208		COUPLING; ARMORED COMPRESSION, DRESSER	1" X 6"	5		$0.00	no bid			no bid			$50.00	$250.00	2-4 weeks aro	$36.10	$180.50	stock	no bid			$46.85	$234.25	stock or 4-5 weeks	$37.03	$185.15	3-4 weeks	no bid	
209		COUPLING; ARMORED COMPRESSION, DRESSER	1 1/4" X 6"	5		$0.00	no bid			no bid			$54.00	$270.00	2-4 weeks aro	$38.96	$194.80	2-4 weeks	no bid			$50.56	$252.80	stock or 4-5 weeks	$39.96	$199.80	3-4 weeks	no bid	
210		COUPLING; ARMORED COMPRESSION, DRESSER	1 1/2" X 6"	5		$0.00	no bid			no bid			$69.00	$345.00	2-4 weeks aro	$50.16	$250.80	stock	no bid			$65.15	$325.75	stock or 4-5 weeks	$51.45	$257.25	3-4 weeks	no bid	
211		COUPLING; ARMORED COMPRESSION, DRESSER	2" X 6"	5		$0.00	no bid			no bid			$79.00	$395.00	2-4 weeks aro	$57.13	$285.65	stock	no bid			$74.16	$370.80	stock or 4-5 weeks	$58.59	$292.95	3-4 weeks	no bid	
212		COUPLING; ARMORED COMPRESSION, DRESSER	3/4" X 12"	5		$0.00	no bid			no bid			$115.00	$575.00	2-4 weeks aro		$0.00		no bid			$108.40	$542.00	stock or 4-5 weeks	$85.64	$428.20	3-4 weeks	no bid	
213		COUPLING; ARMORED COMPRESSION, DRESSER	1" X 12"	5		$0.00	no bid			no bid			$126.00	$630.00	2-4 weeks aro	$90.66	$453.30	2-4 weeks	no bid			$118.64	$593.20	stock or 4-5 weeks	$93.73	$468.65	3-4 weeks	no bid	
214		COUPLING; ARMORED COMPRESSION, DRESSER	1 1/4" X 12"	5		$0.00	no bid			no bid			$135.00	$675.00	2-4 weeks aro	$96.64	$483.20	stock	no bid			$125.45	$627.25	stock or 4-5 weeks	$99.12	$495.60	3-4 weeks	no bid	
215		COUPLING; ARMORED COMPRESSION, DRESSER	1 1/2" X 12"	5		$0.00	no bid			no bid			$155.00	$775.00	2-4 weeks aro	$107.79	$538.95	2-4 weeks	no bid			$143.36	$716.80	stock or 4-5 weeks	$113.27	$566.35	3-4 weeks	no bid	
216		COUPLING; ARMORED COMPRESSION, DRESSER	2" X 12"	5		$0.00	no bid			no bid			$195.00	$975.00	20-24 weeks aro	$137.04	$685.20	2-4 weeks	no bid			$179.18	$895.90	stock or 4-5 weeks	$144.01	$720.05	3-4 weeks	no bid	
217		COUPLING; ARMORED COMPRESSION TEE, DRESSER	3/4"	5		$0.00	no bid			no bid			$85.00	$425.00	2-4 weeks aro	$60.88	$304.40	stock	no bid			$79.05	$395.25	stock or 4-5 weeks	$62.44	$312.20	3-4 weeks	no bid	
218		COUPLING; ARMORED COMPRESSION TEE, DRESSER	1"	5		$0.00	no bid			no bid			$180.00	$900.00	2-4 weeks aro	$127.98	$639.90	stock	no bid			$170.22	$851.10	stock or 4-5 weeks	$134.49	$672.45	3-4 weeks	no bid	
		Incomplete section		Totals		$0.00		$0.00			$0.00			$6,455.00			$4,189.65						$6,029.30			$4,776.00			$0.00	
Weld Tap Tees																													
Item				Estimated			CGS		Estimated	Equip Controls		Estimated	MARIECO		Estimated	G&C Supply		Estimated	Kerotest Mfg		Estimated	Consolidated Pipe		Estimated	IRBY UTILITIES		Estimated	Ferguson Waterworks		Estimated
Number		DESCRIPTION	SIZE	Bid Qty	Unit Price	Cost	Unit Price	Cost	delivery time	Unit Price	Cost	delivery time	Unit Price	Cost	delivery time	Unit Price	Cost	delivery time	Unit Price	Cost	delivery time	Unit Price	Cost	delivery time	Unit Price	Cost	delivery time	Unit Price	Cost	delivery time
223		MUELLER WELD ON TAP	3/4"	5		$0.00	no bid			no bid			no bid			$42.88	$214.40	stock	no bid			$37.10	$185.50	stock	no bid			no bid	
224		MUELLER WELD ON TAP	1"	5		$0.00	no bid			no bid			no bid			$50.75	$253.75	stock	no bid			$44.00	$220.00	stock	no bid			no bid	
225		MUELLER WELD ON TAP	2"	5		$0.00	no bid			no bid			no bid			$108.50	$542.50	2 weeks	no bid			$95.90	$479.50	stock	no bid			no bid	
				Totals		$0.00		$0.00			$0.00			$0.00			$1,010.65			$0.00			$885.00			$0.00			$0.00	
Valve Boxes																													
Item				Estimated			CGS		Estimated	Equip Controls		Estimated	MARIECO		Estimated	G&C Supply		Estimated	Kerotest Mfg		Estimated	Consolidated Pipe		Estimated	IRBY UTILITIES		Estimated	Ferguson Waterworks		Estimated
Number		DESCRIPTION	SIZE	Bid Qty	Unit Price	Cost	Unit Price	Cost	delivery time	Unit Price	Cost	delivery time	Unit Price	Cost	delivery time	Unit Price	Cost	delivery time	Unit Price	Cost	delivery time	Unit Price	Cost	delivery time	Unit Price	Cost	delivery time	Unit Price	Cost	delivery time
230		TALL VALVE BOX WITH LIDS; SIGMA		50		$0.00	no bid			no bid			no bid			$101.88	$5,094.00	stock	no bid			$94.30	$4,715.00	stock	no bid			no bid	
231		SHORT VALVE BOX WITH LIDS; SIGMA		10		$0.00	no bid			no bid			no bid			$78.23	$782.30	stock	no bid			$69.75	$697.50	stock	no bid			no bid	
232		VALVE BOX EXTENSION; SIGMA	1"	25		$0.00	no bid			no bid			no bid			$29.34	$733.50	2 weeks	no bid			$19.05	$476.25	stock	no bid			$21.71	$542.75	1 week
233		VALVE BOX EXTENSION; SIGMA	1.5"	25		$0.00	no bid			no bid			no bid			$29.34	$733.50	2 weeks	no bid			$23.25	$581.25	stock	no bid			$28.29	$707.25	1 week
234		VALVE BOX EXTENSION; SIGMA	2"	30		$0.00	no bid			no bid			no bid			$38.78	$1,163.40	stock	no bid			$23.25	$697.50	stock	no bid			$33.94	$1,018.20	1 week
235		VALVE BOX EXTENSION; SIGMA	3"	25		$0.00	no bid			no bid			no bid			$43.75	$1,093.75	stock	no bid			$31.75	$793.75	stock	no bid			$33.57	$839.25	1 week
236		VALVE BOX EXTENSION; SIGMA	4"	25		$0.00	no bid			no bid			no bid			$59.60	$1,490.00	stock	no bid			$37.05	$926.25	stock	no bid			$33.86	$846.50	1 week
237		VALVE BOX EXTENSION; SIGMA	6"	25		$0.00	no bid			no bid			no bid			$73.78	$1,844.50	stock	no bid			$52.94	$1,323.50	stock	no bid			$48.34	$1,208.50	1 week
		HIGHLIGHTED PORTION IS ALSO ON THE WATER BID (W-500-505)																												
		Incomplete section		Totals		$0.00		$0.00			$0.00			$0.00			$12,934.95			$0.00			$10,211.00			$0.00			$5,162.45	
Metal Inserts																													
Item				Estimated			CGS		Estimated	Equip Controls		Estimated	MARIECO		Estimated	G&C Supply		Estimated	Kerotest Mfg		Estimated	Consolidated Pipe		Estimated	IRBY UTILITIES		Estimated	Ferguson Waterworks		Estimated
Number		DESCRIPTION	SIZE	Bid Qty	Unit Price	Cost	Unit Price	Cost	delivery time	Unit Price	Cost	delivery time	Unit Price	Cost	delivery time	Unit Price	Cost	delivery time	Unit Price	Cost	delivery time	Unit Price	Cost	delivery time	Unit Price	Cost	delivery time	Unit Price	Cost	delivery time
243		METAL STIFFNER INSERTS, ELSTER PERFECTION	3/4" X 6"	5		$0.00	no bid			no bid			$13.00	$65.00	6-8 weeks aro	$9.90	$49.50	stock	no bid			no bid			no bid			no bid		
244		METAL STIFFNER INSERTS, ELSTER PERFECTION	1" X 6"	5		$0.00	no bid			no bid			$13.00	$65.00	6-8 weeks aro	$9.90	$49.50	stock	no bid			no bid			no bid			no bid		
245		METAL STIFFNER INSERTS, ELSTER PERFECTION	1 1/4" X 6"	5		$0.00	no bid			no bid			$16.00	$80.00	6-8 weeks aro	$11.30	$56.50	stock	no bid			no bid			no bid			no bid		
246		METAL STIFFNER INSERTS, ELSTER PERFECTION	1 1/2" X 6"	5		$0.00	no bid			no bid			$21.00	$105.00	6-8 weeks aro	$13.30	$66.50	stock	no bid			no bid			no bid			no bid		
247		METAL STIFFNER INSERTS, ELSTER PERFECTION	2" X 6"	5		$0.00	no bid			no bid			$23.00	$115.00	6-8 weeks aro	$14.15	$70.75	stock	no bid			no bid			no bid			no bid		
248		METAL STIFFNER INSERTS, ELSTER PERFECTION	3" X 6"	5		$0.00	no bid			no bid			no bid			$28.90	$144.50	2-6 weeks	no bid			no bid			no bid			no bid		
		Incomplete section		Totals		$0.00		$0.00			$0.00			$430.00			$437.25			$0.00			$0.00			$0.00			$0.00	
Magnesium Anodes																													
Item				Estimated			CGS		Estimated	Equip Controls		Estimated	MARIECO		Estimated	G&C Supply		Estimated	Kerotest Mfg		Estimated	Consolidated Pipe		Estimated	IRBY UTILITIES		Estimated	Ferguson Waterworks		Estimated
Number		DESCRIPTION	SIZE	Bid Qty	Unit Price	Cost	Unit Price	Cost	delivery time	Unit Price	Cost	delivery time	Unit Price	Cost	delivery time	Unit Price	Cost	delivery time	Unit Price	Cost	delivery time	Unit Price	Cost	delivery time	Unit Price	Cost	delivery time	Unit Price	Cost	delivery time
253		ANODES, MAG	5#	5		$0.00	no bid			no bid			no bid			$99.23	$496.15	stock	no bid			$49.75	$248.75	stock	no bid			no bid		
254		ANODES, MAG	17#	5		$0.00	no bid			no bid			no bid			$276.30	$1,381.50	2-6 weeks	no bid			$168.00	$840.00	stock	no bid			no bid		
				Totals		$0.00		$0.00			$0.00			$0.00			$1,877.65			$0.00			$1,088.75			$0.00			$0.00	
Tracer Wire																													
Item				Estimated			CGS		Estimated	Equip Controls		Estimated	MARIECO		Estimated	G&C Supply		Estimated	Kerotest Mfg		Estimated	Consolidated Pipe		Estimated	IRBY UTILITIES		Estimated	Ferguson Waterworks		Estimated
Number		DESCRIPTION	SIZE	Bid Qty	Unit Price	Cost	Unit Price	Cost	delivery time	Unit Price	Cost	delivery time	Unit Price	Cost	delivery time	Unit Price	Cost	delivery time	Unit Price	Cost	delivery time	Unit Price	Cost	delivery time	Unit Price	Cost	delivery time	Unit Price	Cost	delivery time
259		TRACER WIRE - 12 GAUGE COPPER (500' ROLLS)		30,000		$0.00	no bid			no bid			no bid			$0.31	$9,300.00	stock	no bid			$0.22	$6,600.00	stock	no bid			no bid		
				Totals		$0.00		$0.00			$0.00			$0.00			$9,300.00			$0.00			$6,600.00			$0.00			$0.00	

Electrofusion Fittings

Item				Estimated			CGS		Estimated	Equip Controls		Estimated	MARIECO		Estimated	G&C Supply		Estimated	Kerotest Mfg		Estimated	Consolidated Pipe		Estimated	IRBY UTILITIES		Estimated	Ferguson Waterworks		Estimated
Number		DESCRIPTION	SIZE	Bid Qty	Unit Price	Cost	Unit Price	Cost	delivery time	Unit Price	Cost	delivery time	Unit Price	Cost	delivery time	Unit Price	Cost	delivery time	Unit Price	Cost	delivery time	Unit Price	Cost	delivery time	Unit Price	Cost	delivery time	Unit Price	Cost	delivery time
262		COUPLING; CENTRAL 4710 HDPE	1" X 1"	30		$0.00	no bid			no bid			no bid			$8.15	$244.50	stock	no bid			$6.30	$189.00	stock	$12.22	$366.60	7-10 days	no bid		
263		COUPLING; CENTRAL 4710 HDPE	2" X 2"	20		$0.00	no bid			no bid			no bid			$10.55	$211.00	stock	no bid			$8.15	$163.00	stock	$12.54	$250.80	7-10 days	no bid		
264		COUPLING; CENTRAL 4710 HDPE	3"	10		$0.00	no bid			no bid			no bid			$20.43	$204.30	stock	no bid			$15.79	$157.90	stock	$22.58	$225.80	7-10 days	no bid		
265		COUPLING; CENTRAL 4710 HDPE	4"	20		$0.00	no bid			no bid			no bid			$32.44	$648.80	stock	no bid			$25.05	$501.00	stock	$29.78	$595.60	7-10 days	no bid		
266		COUPLING; CENTRAL 4710 HDPE	6"	10		$0.00	no bid			no bid			no bid			$79.28	$792.80	2-4 weeks	no bid			$61.28	$612.80	stock	$72.79	$727.90	7-10 days	no bid		
267		COUPLING; CENTRAL-REDUCING 4710 HDPE	1" X 3/4"	50		$0.00	no bid			no bid			no bid			$14.16	$708.00	stock	no bid			$10.95	$547.50	stock	$13.00	$650.00	7-10 days	no bid		
268		COUPLING; CENTRAL-REDUCING 4710 HDPE	1" X 1/2"	10		$0.00	no bid			no bid			no bid			$14.16	$141.60	stock	no bid			$10.95	$109.50	stock	$13.00	$130.00	7-10 days	no bid		
269		COUPLING; CENTRAL-TAP TEE 4710 HDPE	2" X 3/4"	200		$0.00	no bid			no bid			no bid			$43.42	$8,684.00	stock	no bid			$26.65	$5,330.00	stock	$31.67	$6,334.00	early Aug	no bid		
270		COUPLING; CENTRAL-TAP TEE 4710 HDPE	2" X 1"	100		$0.00	no bid			no bid			no bid			$32.20	$3,220.00	stock	no bid			$26.68	$2,668.00	stock	$31.67	$3,167.00	3-4 weeks	no bid		
271		COUPLING; CENTRAL- TAP TEE 4710 HDPE	3" X 1"	20		$0.00	no bid			no bid			no bid			$31.94	$638.80	stock	no bid			$29.15	$583.00	stock	$34.64	$692.80	7-10 days	no bid		
272		COUPLING; CENTRAL-TAP TEE 4710 HDPE	4" X 3/4"	100		$0.00	no bid			no bid			no bid			$40.87	$4,087.00	stock	no bid			$35.18	$3,518.00	stock	$41.78	$4,178.00	7-10 days	no bid		
273		COUPLING; CENTRAL-TAP TEE 4710 HDPE	4" X 1"	100		$0.00	no bid			no bid			no bid			$39.73	$3,973.00	stock	no bid			$35.18	$3,518.00	stock	$41.78	$4,178.00	7-10 days	no bid		
274		COUPLING; CENTRAL-TAP TEE 4710 HDPE	6" X 1"	20		$0.00	no bid			no bid			no bid			$51.81	$1,036.20	stock	no bid			$43.56	$871.20	stock	$51.74	$1,034.80	7-10 days	no bid		
275		COUPLING; CENTRAL-TAP TEE-HV 4710 HDPE	2" X 2"	20		$0.00	no bid			no bid			no bid			$132.16	$2,643.20	2-4 weeks	no bid			$104.18	$2,083.60	stock	$123.74	$2,474.80	7-10 days	no bid		
277		COUPLING; CENTRAL-TAP TEE-HV 4710 HDPE	3" X 2"	10		$0.00	no bid			no bid			no bid			$135.67	$1,356.70	stock	no bid			$104.18	$1,041.80	stock	$123.74	$1,237.40	7-10 days	no bid		
278		COUPLING; CENTRAL-TAP TEE-HV 4710 HDPE	4" x 2"	10		$0.00	no bid			no bid			no bid			$141.79	$1,417.90	stock	no bid			$110.94	$1,109.40	stock	$131.78	$1,317.80	7-10 days	no bid		
279		COUPLING; CENTRAL-TAP TEE-HV 4710 HDPE	6" x 2"	10		$0.00	no bid			no bid			no bid			$143.53	$1,435.30	2-4 weeks	no bid			$112.98	$1,129.80	stock	$134.21	$1,342.10	7-10 days	no bid		
				Totals		$0.00		$0.00			$0.00			$0.00			$31,443.10			$0.00			$24,133.50			$28,903.40			$0.00	

Excess Flow Valves

Item				Estimated			CGS		Estimated	Equip Controls			MARIECO		Estimated	G&C Supply		Estimated	Kerotest Mfg		Estimated	Consolidated Pipe		Estimated	IRBY UTILITIES		Estimated	Ferguson Waterworks		Estimated
Number		DESCRIPTION	SIZE	Bid Qty	Unit Price	Cost	Unit Price	Cost	delivery time	Unit Price	Cost		Unit Price	Cost	delivery time	Unit Price	Cost	delivery time	Unit Price	Cost	delivery time	Unit Price	Cost	delivery time	Unit Price	Cost	delivery time	Unit Price	Cost	delivery time
299		EXCESS FLOW VALVE SDR 11 IPS 4710 DRISCO 8300 SERIES 700	3/4"	250		$0.00	no bid			$28.12	$7,030.00	3-5 weeks aro	no bid			$36.23	$9,057.50	2-4 weeks	no bid			$18.00	$4,500.00	stock	$37.38	$9,345.00	2-3 weeks	no bid		
300		EXCESS FLOW VALVE SDR 11 IPS PLEXO 4710 SERIES 1800	1"	15			no bid			$34.31	$514.65	3-5 weeks aro	no bid			$199.38	$2,990.70	4-6 weeks	no bid			$22.75	$341.25	stock	$37.38	$560.70	2-3 weeks	no bid		
301		EXCESS FLOW VALVE SDR 11 IPS PLEXO 4710 SERIES 2600	1"	10			no bid			$34.31	$343.10	3-5 weeks aro	no bid			$199.38	$1,993.80	4-6 weeks	no bid			$28.45	$284.50	stock	$37.38	$373.80	2-3 weeks	no bid		
				Totals		$0.00		$0.00			$7,887.75			$0.00			$14,042.00			$0.00			$5,125.75			$10,279.50			$0.00	

Water Material Bid List - FY 26-27

HIGHLIGHTED = RECOMMENDED AWARD

Meter Yokes/Accessories

Item Number	DESCRIPTION	SIZE	Estimated BID QTY.	United Systems & Software UNIT PRICE	Cost	Estimated Delivery time	G & C Supply UNIT PRICE	Cost	Estimated Delivery time	Core & Main UNIT PRICE	Cost	Estimated Delivery time	Ferguson Waterworks UNIT PRICE	Cost	Estimated Delivery time	Badger Meter UNIT PRICE	Cost	Estimated Delivery time	Hayes Pipe Supply UNIT PRICE	Cost	Estimated Delivery time	Southern Pipe & Supply UNIT PRICE	Cost	Estimated Delivery time	Consolidated Pipe & Supply UNIT PRICE	Cost	Estimated Delivery time	Citgo Water UNIT PRICE	Cost	Estimated Delivery time
1	METER RETROSETTER W/ 360° LOCKWING & DC; MUELLER (FORD ALTERNATE)	5/8" X 3/4"	10	no bid			$240.04	$2,400.40		$172.93	$1,729.30	7-28 days	$209.26	$2,092.60	stock to 6 weeks	no bid			$210.59	$2,105.90	3-5 weeks	$209.49	$2,094.90	20 weeks	no bid			$238.22	$2,382.20	10-15 days
2	METER RISER; RELOCATOR W/ 360° LOCKWING & DC; MUELLER (FORD ALTERNATE)	5/8" X 3/4" X 7"	200	no bid			$229.18	$45,836.00		$156.88	$31,376.00	7-28 days	$199.79	$39,958.00	stock to 6 weeks	no bid			$202.33	$40,466.00	3-5 weeks	$198.00	$39,600.00	20 weeks	no bid			$251.13	$50,226.00	10-15 days
3	METER RISER; RELOCATOR W/ 360° LOCKWING & DC; MUELLER (FORD ALTERNATE)	5/8" X 3/4" X 12"	10	no bid			$237.82	$2,378.20		$203.17	$2,031.70	7-28 days	$203.87	$2,038.70	stock to 6 weeks	no bid			$206.44	$2,064.40	3-5 weeks	$204.09	$2,040.90	20 weeks	no bid			$244.66	$2,446.60	10-15 days
4	METER RISER RELOCATOR W/ 360° LOCKWING & DC; MUELLER (FORD ALTERNATE)	1" X 10"	80	no bid			$378.46	$30,276.80		$333.37	$26,669.60	7-28 days	$299.71	$23,976.80	stock to 6 weeks	no bid			$334.10	$26,728.00	3-5 weeks	$328.98	$26,318.40	20 weeks	no bid			$395.97	$31,677.60	10-15 days
5	METER RISER; RELOCATOR W/ 360° LOCKWING & DC; MUELLER (FORD ALTERNATE)	1.5" X 14"	5	no bid			$1,740.89	$8,704.45		$1,515.12	$7,575.60	7-28 days	$1,557.27	$7,786.35	stock to 6 weeks	no bid			$1,576.90	$7,884.50	3-5 weeks	$1,536.00	$7,680.00	20 weeks	no bid			no bid		
6	METER RISER; RELOCATOR W/ 360°	2" X 14"	10	no bid			$1,833.51	$18,335.10		$1,665.28	$16,652.80	7-28 days	$1,625.97	$16,259.70	weeks	no bid			$1,646.47	$16,464.70	3-5 weeks	$1,603.00	$16,030.00	20 weeks	no bid			$1,949.82	$19,498.20	10-15 days
7	METER RISER; RELOCATOR W/360° LOCKWING & DC; FORD W/BYPASS	2" X 14"	2	no bid			$1,935.36	$3,870.72		$1,917.76	$3,835.52	7-28 days	$1,713.36	$3,426.72	stock to 6 weeks	no bid			$1,734.96	$3,469.92	3-5 weeks	$1,689.00	$3,378.00	20 weeks	no bid			no bid		
9	METER SWIVEL 2.5L; FORD	5/8" X 3/4" X 3/4"x 2.5" LONG	200	no bid			$14.60	$2,920.00		$10.54	$2,108.00	7-28 days	$15.00	$3,000.00	stock to 6 weeks	no bid			$12.68	$2,536.00	2 weeks	$12.41	$2,482.00	20 weeks	no bid			$14.54	$2,908.00	10-15 days
10	METER SWIVEL COUPLING ; FORD	5/8" X 3/4" X 3/4" X 2.25" LONG	5	no bid			$14.60	$73.00		$24.56	$122.80	7-28 days	$15.00	$75.00	stock to 6 weeks	no bid			$12.68	$63.40	3 weeks	$12.41	$62.05	20 weeks	no bid			$14.54	$72.70	10-15 days
11	METER SWIVEL COUPLING STRAIGHT; FORD	1"	80	no bid			$22.49	$1,799.20		$16.21	$1,296.80	7-28 days	$20.00	$1,600.00	stock to 6 weeks	no bid			$19.53	$1,562.40	4 weeks	$19.10	$1,528.00	20 weeks	no bid			$22.39	$1,791.20	10-15 days
12	FLANGE PAK FOR METER - BRASS (BOX W/2)	1.5"	8	no bid			$88.97	$711.76		$116.33	$930.64	7-28 days	$95.97	$767.76	stock to 6 weeks	no bid			$58.91	$471.28	5 weeks	$99.04	$792.32	20 weeks	no bid			$62.31	$498.48	10-15 days
13	FLANGE PAK FOR METER - BRASS (BOX W/ 2)	2"	10	no bid			$117.35	$1,173.50		$126.23	$1,262.30	7-28 days	$102.64	$1,026.40	stock to 6 weeks	no bid			$62.73	$627.30	3-5 weeks	$103.50	$1,035.00	20 weeks	no bid			$119.50	$1,195.00	10-15 days
14	A-24 METER ADAPTOR; FORD	5/8" x 3/4" to 1"	120	no bid			$37.31	$4,477.20		$31.93	$3,831.60	7-28 days	$31.98	$3,837.60	stock to 6 weeks	no bid			$32.39	$3,886.80	3-5 weeks	$31.38	$3,765.60	20 weeks	no bid			$37.14	$4,456.80	10-15 days
15	A-47 FLANGED METER ADAPTOR; FORD (BOX W/ 2)	1" TO 2"	5	no bid			$222.01	$1,110.05		$161.89	$809.45	7-28 days	$190.94	$954.70	stock to 6 weeks	no bid			$194.75	$973.75	3-5 weeks	$188.77	$943.85	20 weeks	no bid			$221.04	$1,105.20	10-15 days
16	A-67 FLANGED METER ADAPTOR; FORD (BOX W/2)	1.5" TO 2"	5	no bid			$319.42	$1,597.10		$232.91	$1,164.55	7-28 days	$273.82	$1,369.10	stock to 6 weeks	no bid			$280.19	$1,400.95	3-5 weeks	$271.61	$1,358.05	20 weeks	no bid			$318.01	$1,590.05	10-15 days
	Incomplete section		Totals					$125,663.48			$101,396.66			$108,169.43						$110,705.30			$109,109.07						$119,848.03	

Water Regulators

Item Number	DESCRIPTION	SIZE	Estimated BID QTY.	United Systems & Software UNIT PRICE	Cost	Estimated Delivery time	G & C Supply UNIT PRICE	Cost	Estimated Delivery time	Core & Main UNIT PRICE	Cost	Estimated Delivery time	Ferguson Waterworks UNIT PRICE	Cost	Estimated Delivery time	Badger Meter UNIT PRICE	Cost	Estimated Delivery time	Hayes Pipe Supply UNIT PRICE	Cost	Estimated Delivery time	Southern Pipe & Supply UNIT PRICE	Cost	Estimated Delivery time	Consolidated Pipe & Supply UNIT PRICE	Cost	Estimated Delivery time	Citgo Water UNIT PRICE	Cost	Estimated Delivery time
17	REGULATOR; WATTS	3/4"	4	no bid			$150.72	$602.88		$419.22	$1,676.88	7-28 days	$185.74	$742.96	stock to 6 weeks	no bid			$185.62	$742.48	3 weeks	no bid			no bid			$130.21	$520.84	10-15 days
18	REGULATOR; WATTS	1"	4	no bid			$227.70	$910.80		$536.59	$2,146.36	7-28 days	$271.07	$1,084.28	stock to 6 weeks	no bid			$294.78	$1,179.12	6-8 weeks	no bid			no bid			$152.38	$609.52	10-15 days
19	REGULATOR; ZURN WILKINS	3/4"	2	no bid			$92.69	$185.38		$100.00	$200.00	7-28 days	$142.86	$285.72	stock to 6 weeks	no bid			$269.25	$538.50	1-2 weeks	no bid			no bid			$134.44	$268.88	10-15 days
			Totals		$0.00			$1,699.06			$4,023.24			$2,112.96			$0.00			$2,460.10					$0.00			$1,399.24	

Water Module

Item Number	DESCRIPTION	SIZE	Estimated BID QTY.	United Systems & Software UNIT PRICE	Cost	Estimated Delivery time	G & C Supply UNIT PRICE	Cost	Estimated Delivery time	Core & Main UNIT PRICE	Cost	Estimated Delivery time	Ferguson Waterworks UNIT PRICE	Cost	Estimated Delivery time	Badger Meter UNIT PRICE	Cost	Estimated Delivery time	Hayes Pipe Supply UNIT PRICE	Cost	Estimated Delivery time	Southern Pipe & Supply UNIT PRICE	Cost	Estimated Delivery time	Consolidated Pipe & Supply UNIT PRICE	Cost	Estimated Delivery time	Citgo Water UNIT PRICE	Cost	Estimated Delivery time
21	ITRON UNIVERSAL MODULE W/ LID MOUNTING KIT	UNIVERSAL	275	$125.00	$34,375.00	12 weeks	$9.38	$2,579.50		no bid			no bid			no bid			no bid			no bid			no bid			no bid		
22	ITRON UNIVERSAL LEAK SENSOR	UNIVERSAL	10	$180.00	$1,800.00	12 weeks	$236.38	$2,363.80		no bid			no bid			no bid			no bid			no bid			no bid			no bid		
23	CELLULAR 500W MODULE W/LID MOUNTING KIT	UNIVERSAL	100	$142.00	$14,200.00	24 weeks	no bid			no bid			no bid			no bid			no bid			no bid			no bid			no bid		
	Incomplete section		Totals		$50,375.00			$4,943.30									$0.00			$0.00			$0.00			$0.00			$0.00	

Meter and Parts

Item Number	DESCRIPTION	SIZE	Estimated BID QTY.	United Systems & Software UNIT PRICE	Cost	Estimated Delivery time	G & C Supply UNIT PRICE	Cost	Estimated Delivery time	Core & Main UNIT PRICE	Cost	Estimated Delivery time	Ferguson Waterworks UNIT PRICE	Cost	Estimated Delivery time	Badger Meter UNIT PRICE	Cost	Estimated Delivery time	Hayes Pipe Supply UNIT PRICE	Cost	Estimated Delivery time	Southern Pipe & Supply UNIT PRICE	Cost	Estimated Delivery time	Consolidated Pipe & Supply UNIT PRICE	Cost	Estimated Delivery time	Citgo Water UNIT PRICE	Cost	Estimated Delivery time
24	METER CIB/HRE/USG W/ ITRON CONNECTOR; BADGER	5/8" X 3/4"	200	no bid			no bid			no bid			no bid			$160.68	$32,136.00	5 days aro	no bid			no bid			no bid			no bid		
25	METER CIB/HRE/USG W/ ITRON CONNECTOR; BADGER	1"	80	no bid			no bid			no bid			no bid			$296.86	$23,748.80	5 days aro	no bid			no bid			no bid			no bid		
26	METER CIB/HRE/USG W/ ITRON CONNECTOR; BADGER	1.5"	4	no bid			no bid			no bid			no bid			$553.70	$2,214.80	10 days aro	no bid			no bid			no bid			no bid		

Number		DESCRIPTION	SIZE	BID QTY.	UNIT PRICE	Cost		UNIT PRICE	Cost		UNIT PRICE	Cost		UNIT PRICE	Cost	Delivery time	UNIT PRICE	Cost		UNIT PRICE	Cost	Delivery time	UNIT PRICE	Cost	Delivery time	UNIT PRICE	Cost	Delivery time	UNIT PRICE	Cost	Delivery time
27		METER ELLIPTICALW/T. PLUG HRE/USG W/ ITRON CONNECTOR W/ D. P.; BADGER	2"	6	no bid			no bid			no bid			no bid			$781.20	$4,687.20	10 days aro	no bid			no bid			no bid			no bid		
28		METER BOTTOMS FOR BADGER METER; BADGER	5/8" X 3/4"	25	no bid			no bid			no bid			no bid			$8.24	$206.00	5 days aro	no bid			no bid			no bid			no bid		
29		METER BOTTOMS FOR BADGER METER	1"	10	no bid			no bid			no bid			no bid			$22.66	$226.60	5 days aro	no bid			no bid			no bid			no bid		
37		CHAMBER for M70 BADGER METER	1"	5	no bid			no bid			no bid			no bid			$101.97	$509.85	5 days aro	no bid			no bid			no bid			no bid		
38		CHAMBER for M120 BADGER METER	1.5"	5	no bid			no bid			no bid			no bid			$218.36	$1,091.80	5 days aro	no bid			no bid			no bid			no bid		
39		CHAMBER forM170 BADGER METER	2"	5	no bid			no bid			no bid			no bid			$232.78	$1,163.90	5 days aro	no bid			no bid			no bid			no bid		
40		RETROFIT REGISTER w/ ITRON CONNECTOR; BADGER	5/8" X 3/4"	400	no bid			no bid			no bid			no bid			$96.89	$38,756.00	5 days aro	no bid			no bid			no bid			no bid		
41		RETROFIT REGISTER w/ ITRON CONNECTOR; BADGER	1"	6	no bid			no bid			no bid			no bid			$96.89	$581.34	5 days aro	no bid			no bid			no bid			no bid		
42		RETROFIT REGISTER w/ ITRON CONNECTOR; BADGER	1.5"	2	no bid			no bid			no bid			no bid			$96.89	$193.78	10 days aro	no bid			no bid			no bid			no bid		
43		RETROFIT REGISTER w/ ITRON CONNECTOR; BADGER	2"	4	no bid			no bid			no bid			no bid			$96.89	$387.56	10 days aro	no bid			no bid			no bid			no bid		
				Totals		$0.00			$0.00			$0.00			$0.00			$105,903.63			$0.00			$0.00			$0.00			$0.00	

Ultrasonic Meters and Parts

Item Number		DESCRIPTION	SIZE	Estimated BID QTY.	United Systems & Software UNIT PRICE	Cost		G & C Supply UNIT PRICE	Cost		Core & Main UNIT PRICE	Cost		Ferguson Waterworks UNIT PRICE	Cost	Estimated Delivery time	Badger Meter UNIT PRICE	Cost		Hayes Pipe Supply UNIT PRICE	Cost	Estimated Delivery time	Southern Pipe & Supply UNIT PRICE	Cost	Estimated Delivery time	Consolidated Pipe & Supply UNIT PRICE	Cost	Estimated Delivery time	Citgo Water UNIT PRICE	Cost	Estimated Delivery time
44		NEPTUNE METER W/ 5' ITRON CONNECTOR in 100 USG	2" X 17"	4	no bid			no bid			no bid			$918.00	$3,672.00	stock to 6 weeks	no bid			no bid			no bid			no bid			no bid		
45		NEPTUNE METER W/ 25' ITRON CONNECTOR in 100 USG W/ FLANGE PAKS	3" X 12"	2	no bid			no bid			no bid			$3,446.30	$6,892.60	stock to 6 weeks	no bid			no bid			no bid			no bid			no bid		
46		NEPTUNE METER W/ 25' ITRON CONNECTOR in 100 USG W/ FLANGE PAKS	4" X 14"	2	no bid			no bid			no bid			$4,431.49	$8,862.98	stock to 6 weeks	no bid			no bid			no bid			no bid			no bid		
47		NEPTUNE METER W/ 25' ITRON CONNECTOR in 100 USG W/ FLANGE PAKS	6" X 18"	3	no bid			no bid			no bid			$7,435.02	$22,305.06	stock to 6 weeks	no bid			no bid			no bid			no bid			no bid		
				Totals		$0.00			$0.00			$0.00			$41,732.64			$0.00			$0.00			$0.00			$0.00			$0.00	

Meter Boxes and Lids

Item Number		DESCRIPTION	SIZE	Estimated BID QTY.	United Systems & Software UNIT PRICE	Cost		G & C Supply UNIT PRICE	Cost		Core & Main UNIT PRICE	Cost		Ferguson Waterworks UNIT PRICE	Cost	Estimated Delivery time	Badger Meter UNIT PRICE	Cost		Hayes Pipe Supply UNIT PRICE	Cost	Estimated Delivery time	Southern Pipe & Supply UNIT PRICE	Cost	Estimated Delivery time	Consolidated Pipe & Supply UNIT PRICE	Cost	Estimated Delivery time	Citgo Water UNIT PRICE	Cost	Estimated Delivery time
48		SIGMA RMB-132418-SW W/RMB-1324-L-RT READ DOOR AND RECESS TOUCH READ HOLE	5/8" x 3/4" meters	50	no bid			$193.37	$9,668.50	stock	$205.60	$10,280.00	7-28 days	$214.94	$10,747.00	stock to 6 weeks	no bid			$167.86	$8,393.00	1-2 weeks	$165.94	$8,297.00	2 weeks	no bid			$98.15	$4,907.50	10-15 days
49		SIGMA RMB-173018-SW W/RMB-1730-L-RT READ DOOR AND RECESS TOUCH READ HOLE	1" - 2" meters	25	no bid			$302.28	$7,557.00	stock	$326.98	$8,174.50	7-28 days	$361.39	$9,034.75	stock to 6 weeks	no bid			$263.52	$6,588.00	1-2 weeks	$257.13	$6,428.25	2 weeks	no bid			$142.90	$3,572.50	10-15 days
50		SIGMA LID ONLY LC1324T-D READ DOOR AND RECESS TOUCH READ HOLE	5/8"X3/5" METERS	10	no bid			$87.36	$873.60	stock	$109.57	$1,095.70	7-28 days	$120.58	$1,205.80	stock to 6 weeks	no bid			$75.84	$758.40	1-2 weeks	$74.97	$749.70	2 weeks	no bid			$72.95	$729.50	10-15 days
51		SIGMA LID ONLY LC1730T-D READ DOOR AND RECESS TOUCH READ HOLE	1" - 2"METERS	10	no bid			$149.23	$1,492.30	stock	$187.18	$1,871.80	7-28 days	$214.29	$2,142.90	stock to 6 weeks	no bid			$129.55	$1,295.50	1-2 weeks	$127.98	$1,279.80	2 weeks	no bid			$110.57	$1,105.70	10-15 days
55		CI SOLID METER BOX LID W/ ITRON TR HOLE FOR BROOKS 36H15 METER BOX LID ONLY	CI SOLID LID FOR BROOKS 36H15	25	no bid			$37.80	$945.00	stock	$29.35	$733.75	7-28 days	no bid						$28.13	$703.25	1-2 weeks	$27.80	$695.00	2 weeks	no bid			$32.67	$816.75	10-15 days
		***1324 AND 1730 BOXES SHALL COME W/LID READER DOOR AND RECESS TOUCH READ HOLE**																													
		Incomplete section		**Totals**		$0.00			$20,536.40			$22,155.75			$23,130.45			$0.00			$17,738.15			$17,449.75			$0.00			$11,131.95	

Brass Fittings

Item Number		DESCRIPTION	SIZE	Estimated BID QTY.	United Systems & Software UNIT PRICE	Cost		G & C Supply UNIT PRICE	Cost		Core & Main UNIT PRICE	Cost		Ferguson Waterworks UNIT PRICE	Cost		Badger Meter UNIT PRICE	Cost		Hayes Pipe Supply UNIT PRICE	Cost	Estimated Delivery time	Southern Pipe & Supply UNIT PRICE	Cost	Estimated Delivery time	Consolidated Pipe & Supply UNIT PRICE	Cost	Estimated Delivery time	Citgo Water UNIT PRICE	Cost	Estimated Delivery time
59		BRASS REDUCTION COUPLING	2" X 1.5"	2	no bid			$34.10	$68.20	stock	$32.30	$64.60	7-28 days	$39.00	$78.00	stock to 6 weeks	no bid			$25.86	$51.72	2 weeks	no bid			no bid			$23.13	$46.26	10-15 days
60		ROUGH BRASS 45° COUPLING	1.5"	2	no bid			$23.30	$46.60	stock	$22.30	$44.60	7-28 days	$26.57	$53.14	stock to 6 weeks	no bid			$17.83	$35.66	2 weeks	no bid			no bid			$15.72	$31.44	10-15 days
61		ROUGH BRASS 90° COUPLING	1.5"	2	no bid			$28.78	$57.56	stock	$20.19	$40.38	7-28 days	$33.62	$67.24	stock to 6 weeks	no bid			$16.15	$32.30	2 weeks	no bid			no bid			$14.45	$28.90	10-15 days
64		FEMALE THREAD BALL VALVE; FORD	3/4"	10	no bid			$145.45	$1,454.50	stock	$57.00	$570.00	7-28 days	$39.85	$398.50	stock to 6 weeks	no bid			$48.24	$482.40	2 weeks	no bid			no bid			$50.37	$503.70	10-15 days
65		BRASS TEE	2"x2"x2"	10	no bid			$46.62	$466.20	stock	$45.50	$455.00	7-28 days	$54.00	$540.00	stock to 6 weeks	no bid			$36.42	$364.20	2 weeks	no bid			no bid			$32.57	$325.70	10-15 days
66		BRASS THREADED 90°; MATCO	2"	10	no bid			$33.67	$336.70	stock	$32.85	$328.50	7-28 days	$38.39	$383.90	stock to 6 weeks	no bid			$26.29	$262.90	2 weeks	no bid			no bid			$23.52	$235.20	10-15 days
67		BRASS THREADED STREET 90°; MATCO	2"	10	no bid			$49.21	$492.10	stock	$48.00	$480.00	7-28 days	$58.35	$583.50	stock to 6 weeks	no bid			$39.22	$392.20	2 weeks	no bid			no bid			$34.37	$343.70	10-15 days
68		THREADED COUPLING; MATCO	2"	10	no bid			$29.03	$290.30	stock	$28.32	$283.20	7-28 days	$34.42	$344.20	stock to 6 weeks	no bid			$22.65	$226.50	2 weeks	no bid			no bid			$20.27	$202.70	10-15 days
69		BRASS ALL-THREAD	1.5"	2	no bid			$10.57	$21.14	stock	$9.06	$18.12	7-28 days	$12.52	$25.04	stock to 6 weeks	no bid			$9.63	$19.26	2 weeks	no bid			no bid			$7.26	$14.52	10-15 days
70		BRASS NIPPLE	1.5" X 6"	2	no bid			$28.09	$56.18	stock	$25.83	$51.66	7-28 days	$33.31	$66.62	stock to 6 weeks	no bid			$27.44	$54.88	2 weeks	no bid			no bid			$20.70	$41.40	10-15 days

71		BRASS ALL THREAD; MATCO--NORCA	2"	20	no bid			$16.09	$321.80	stock	$13.80	$276.00	7-28 days	$19.06	$381.20	stock to 6 weeks	no bid			$14.66	$293.20	2 weeks	no bid			no bid			$11.05	$221.00	10-15 days
72		BRASS NIPPLE; MATCO-NORCA	2" X 6" LONG	10	no bid			$36.12	$361.20	stock	$33.21	$332.10	7-28 days	$42.82	$428.20	stock to 6 weeks	no bid			$35.26	$352.60	2 weeks	no bid			no bid			$26.61	$266.10	10-15 days
73		BRASS NIPPLE; BMI	2" X 12" LONG	10	no bid			$71.17	$711.70	stock	$65.42	$654.20	7-28 days	$93.58	$935.80	stock to 6 weeks	no bid			$69.51	$695.10	2 weeks	no bid			no bid			$52.43	$524.30	10-15 days
74		BRASS NIPPLE	2" X 18" LONG	6	no bid			no bid		per order	$133.44	$800.64	7-28 days	$153.00	$918.00	stock to 6 weeks	no bid			$107.63	$645.78	2 weeks	no bid			no bid			$82.58	$495.48	10-15 days
75		BRASS NIPPLE	2" X 24" LONG	6	no bid			no bid		per order	$177.91	$1,067.46	7-28 days	$204.00	$1,224.00	stock to 6 weeks	no bid			$143.48	$860.88	2 weeks	no bid			no bid			$110.11	$660.66	10-15 days
76		CHECK VALVES; RED & WHITE	1.5"	4	no bid			$21.83	$87.32	2-4 weeks	$36.62	$146.48	7-28 days	$43.67	$174.68	stock to 6 weeks	no bid			no bid			no bid			no bid			no bid		
77		CHECK VALVE; RED & WHITE	2"	4	no bid			$36.13	$144.52	stock	$57.97	$231.88	7-28 days	$62.62	$250.48	stock to 6 weeks	no bid			no bid			no bid			no bid			no bid		
78		APOLLO BALL VALVE	2"	6	no bid			$304.94	$1,829.64	2-4 weeks	$110.80	$664.80	7-28 days	$163.17	$979.02	stock to 6 weeks	no bid			no bid			no bid			no bid			$57.59	$345.54	10-15 days
		Incomplete section		**Totals**		$0.00			$6,745.66			$6,509.62			$7,831.52			$0.00			$4,769.58			$0.00			$0.00		$4,286.60	
Compression Fittings																														
Item				**Estimated**	**United Systems & Software**			**G & C Supply**			**Core & Main**			**Ferguson Waterworks**		**Estimated**	**Badger Meter**			**Hayes Pipe Supply**		**Estimated**	**Southern Pipe & Supply**		**Estimated**	**Consolidated Pipe & Supply**		**Estimated**	**Citgo Water**		**Estimated**
Number		**DESCRIPTION**	**SIZE**	**BID QTY.**	**UNIT PRICE**	**Cost**		**UNIT PRICE**	**Cost**		**UNIT PRICE**	**Cost**		**UNIT PRICE**	**Cost**	**Delivery time**	**UNIT PRICE**	**Cost**		**UNIT PRICE**	**Cost**	**Delivery time**	**UNIT PRICE**	**Cost**	**Delivery time**	**UNIT PRICE**	**Cost**	**Delivery time**	**UNIT PRICE**	**Cost**	**Delivery time**
82		COUPLING; FMLIP;FORD	FMLIP 3/4" X 3/4" CTS	5	no bid			$21.10	$105.50	stock	$18.61	$93.05	7-28 days	$20.29	$101.45	stock to 6 weeks	no bid			$21.64	$108.20	1 week	$20.28	$101.40	4 weeks	no bid			$23.56	$117.80	10-15 days
83		COUPLING; FORD	3/4" X 3/4" CTS	30	no bid			$24.43	$732.90	stock	$21.19	$635.70	7-28 days	$23.49	$704.70	stock to 6 weeks	no bid			$24.99	$749.70	1 week	$23.48	$704.40	4 weeks	no bid			$27.27	$818.10	10-15 days
84		COUPLING; FORD	3/4" X 3/4" CTS	5	no bid			$20.05	$100.25	stock	$17.37	$86.85	7-28 days	$19.28	$96.40	stock to 6 weeks	no bid			$20.57	$102.85	1 week	$19.27	$96.35	4 weeks	no bid			$22.39	$111.95	10-15 days
85		COUPLING; FORD	3/4" CTS PAK X 3/4" IP MALE	30	no bid			$28.38	$851.40	stock	$24.36	$730.80	7-28 days	$27.28	$818.40	stock to 6 weeks	no bid			$29.03	$870.90	1 week	$27.28	$818.40	4 weeks	no bid			$31.69	$950.70	10-15 days
86		COUPLING; FMLIP; FORD	3/4" CTS PACK X 1" CTS PACK	15	no bid			$28.62	$429.30	stock	$26.62	$399.30	7-28 days	$25.29	$379.35	stock to 6 weeks	no bid			$29.28	$439.20	1 week	$27.00	$405.00	4 weeks	no bid			$31.96	$479.40	10-15 days
87		COUPLING; FORD	1" CTS X 1" CTS	25	no bid			$27.94	$698.50	stock	$23.11	$577.75	7-28 days	$26.86	$671.50	stock to 6 weeks	no bid			$28.58	$714.50	1 week	$46.50	$1,162.50	4 weeks	no bid			$31.19	$779.75	10-15 days
88		COUPLING; FORD	1" CTS X 1" I.P. MALE	6	no bid			$23.74	$142.44	stock	$20.52	$123.12	7-28 days	$22.83	$136.98	stock to 6 weeks	no bid			$24.60	$147.60	1 week	$28.07	$168.42	4 weeks	no bid			$26.52	$159.12	10-15 days
89		COUPLING; FORD	2" CTS X 2" CTS JOINT PK	6	no bid			$123.84	$743.04	stock	$110.06	$660.36	7-28 days	$121.32	$727.92	stock to 6 weeks	no bid			$128.41	$770.46	1 week	$115.00	$690.00	4 weeks	no bid			$140.91	$845.46	10-15 days
90		2" CTS X 2" IRON PIPE THREAD; FORD	2" CTS X 2" IRON PIPE THREAD	6	no bid			$94.79	$568.74	stock	$82.66	$495.96	7-28 days	$91.13	$546.78	stock to 6 weeks	no bid			$97.21	$583.26	1 week	$90.10	$540.60	4 weeks	no bid			$105.84	$635.04	10-15 days
91		COUPLING; T'S ; FORD	3/4" X 3/4" X 3/4" CTS	20	no bid			$59.10	$1,182.00	stock	$48.71	$974.20	7-28 days	$56.82	$1,136.40	stock to 6 weeks	no bid			$60.45	$1,209.00	2 weeks	$56.35	$1,127.00	4 weeks	no bid			$65.99	$1,319.80	10-15 days
92		COUPLING; T'S ; FORD	3/4" X 3/4" X 1" CTS	10	no bid			$64.92	$649.20	stock	$57.93	$579.30	7-28 days	$60.53	$605.30	stock to 6 weeks	no bid			$66.41	$664.10	2 weeks	$60.69	$606.90	4 weeks	no bid			$72.49	$724.90	10-15 days
93		COUPLING; T'S; FORD	1" X 1" X 3/4"	5	no bid			no bid			$51.94	$259.70	7-28 days	$45.93	$229.65	stock to 6 weeks	no bid			$66.58	$332.90	2-3 weeks	$123.00	$615.00	4 weeks	no bid			$70.62	$353.10	10-15 days
94		COUPLING; T'S; FORD	1" X 1" X 1" CTS PAK JOINT	5	no bid			$63.25	$316.25	stock	$67.54	$337.70	7-28 days	$60.81	$304.05	stock to 6 weeks	no bid			$64.86	$324.30	2 weeks	$60.30	$301.50	4 weeks	no bid			$70.62	$353.10	10-15 days
95		BALL VALVE; FORD	3/4"	20	no bid			$57.60	$1,152.00	stock	$77.67	$1,553.40	7-28 days	$55.37	$1,107.40	stock to 6 weeks	no bid			$58.93	$1,178.60	2 weeks	$55.43	$1,108.60	4 weeks	no bid			$64.32	$1,286.40	10-15 days
96		BALL VALVE; FORD	1"	20	no bid			$115.41	$2,308.20		$116.73	$2,334.60	7-28 days	$110.96	$2,219.20	stock to 6 weeks	no bid			$118.05	$2,361.00	2 weeks	$110.74	$2,214.80	4 weeks	no bid			$125.73	$2,514.60	10-15 days
97		COUPLING; "Y"; FORD	3/4" X 3/4" X 1" CTS	25	no bid			$50.54	$1,263.50		$41.69	$1,042.25	7-28 days	$48.59	$1,214.75	stock to 6 weeks	no bid			$51.70	$1,292.50	2 weeks	$48.39	$1,209.75	4 weeks	no bid			$56.43	$1,410.75	10-15 days
98		90° COUPLING; FORD	3/4"	5	no bid			$31.55	$157.75		$26.05	$130.25	7-28 days	$30.34	$151.70	stock to 6 weeks	no bid			$32.37	$161.85	2 weeks	$30.08	$150.40	4 weeks	no bid			$35.24	$176.20	10-15 days
99		90° COUPLING; FORD	1"	5	no bid			$40.53	$202.65		$33.44	$167.20	7-28 days	$38.97	$194.85	stock to 6 weeks	no bid			$41.57	$207.85	2 weeks	$38.58	$192.90	4 weeks	no bid			$45.26	$226.30	10-15 days
100		Q -NUT ASSEMBLY	3/4"	20	no bid			$9.73	$194.60		$7.96	$159.20	7-28 days	$8.69	$173.80	stock to 6 weeks	no bid			$9.29	$185.80	2 weeks	$9.34	$186.80	4 weeks	no bid			$10.09	$201.80	10-15 days
101		Q -NUT ASSEMBLY	1"	20	no bid			$11.92	$238.40		$12.69	$253.80	7-28 days	$10.66	$213.20	stock to 6 weeks	no bid			$11.38	$227.60	2 weeks	$11.38	$227.60	4 weeks	no bid			$12.38	$247.60	10-15 days
102		FEMALE COPPER THREAD GRIP JOINT; FORD	3/4" X 3/4" CTS	5	no bid			$22.81	$114.05		$28.25	$141.25	7-28 days	$21.93	$109.65	stock to 6 weeks	no bid			$23.19	$115.95	2-3 weeks	$21.87	$109.35	4 weeks	no bid			$25.47	$127.35	10-15 days
103		FEMALE COPPER THREAD GRIP JOINT; FORD	1" X 1" CTS	5	no bid			$33.53	$167.65		$41.50	$207.50	7-28 days	$32.24	$161.20	stock to 6 weeks	no bid			$34.09	$170.45	2-3 weeks	$31.96	$159.80	4 weeks	no bid			$37.44	$187.20	10-15 days
104		PAK J ASSEMBLY; FORD	1" FEMALE X 3/4" CTS	5	no bid			$20.81	$104.05		$31.69	$158.45	7-28 days	$20.01	$100.05	stock to 6 weeks	no bid			$21.15	$105.75	2-3 weeks	$19.93	$99.65	4 weeks	no bid			$31.77	$158.85	10-15 days
105		COUPLING SWIVEL 45 DEGREE; FORD	3/4"X3/4"	5	no bid			$36.02	$180.10		$72.47	$362.35	7-28 days	$34.63	$173.15	stock to 6 weeks	no bid			$36.59	$182.95	2-3 weeks	$34.51	$172.55	4 weeks	no bid			$40.21	$201.05	10-15 days
106		COUPLING SWIVEL 45 DEGREE; FORD	1"X1"	5	no bid			$51.18	$255.90		$84.50	$422.50	7-28 days	$49.20	$246.00	stock to 6 weeks	no bid			$51.60	$258.00	2-3 weeks	$48.98	$244.90	4 weeks	no bid			$57.15	$285.75	10-15 days
107		COUPLING SWIVEL 90 DEGREE; FORD	3/4"X3/4"	5	no bid			$40.22	$201.10		$58.36	$291.80	7-28 days	$38.67	$193.35	stock to 6 weeks	no bid			$40.87	$204.35	2-3 weeks	$38.55	$192.75	4 weeks	no bid			$44.91	$224.55	10-15 days
108		COUPLING SWIVEL 90 DEGREE; FORD	1"X1"	5	no bid			$54.86	$274.30		$75.82	$379.10	7-28 days	$52.74	$263.70	stock to 6 weeks	no bid			$55.75	$278.75	2-3 weeks	$52.58	$262.90	4 weeks	no bid			$61.25	$306.25	10-15 days
109		MULTI SERVICE Y NL 1-2" FMLIP X 4-1" FMLIP	2"X1"	5	no bid			$98.57	$492.85		$102.66	$513.30	7-28 days	$94.76	$473.80	stock to 6 weeks	no bid			$100.15	$500.75	2-3 weeks	$94.48	$472.40	4 weeks	no bid			$110.06	$550.30	10-15 days
		Incomplete section		**Totals**		$0.00			$13,826.62			$14,070.74			$13,454.68			$0.00			$14,449.12			$14,342.62			$0.00		$15,753.17	
Curb Stops																														
Item				**Estimated**	**United Systems & Software**			**G & C Supply**			**Core & Main**			**Ferguson Waterworks**		**Estimated**	**Badger Meter**			**Hayes Pipe Supply**		**Estimated**	**Southern Pipe & Supply**		**Estimated**	**Consolidated Pipe & Supply**		**Estimated**	**Citgo Water**		**Estimated**
Number		**DESCRIPTION**	**SIZE**	**BID QTY.**	**UNIT PRICE**	**Cost**		**UNIT PRICE**	**Cost**		**UNIT PRICE**	**Cost**		**UNIT PRICE**	**Cost**	**Delivery time**	**UNIT PRICE**	**Cost**		**UNIT PRICE**	**Cost**	**Delivery time**	**UNIT PRICE**	**Cost**	**Delivery time**	**UNIT PRICE**	**Cost**	**Delivery time**	**UNIT PRICE**	**Cost**	**Delivery time**
113		CURB STOP W/360 DEGREE LOCKING WINGNUT; FORD	3/4"	200	no bid			$61.63	$12,326.00	stock	$80.03	$16,006.00	7-28 days	$59.25	$11,850.00	stock to 6 weeks	no bid			$58.19	$11,638.00	1 week	$58.37	$11,674.00	4 weeks	no bid			$68.82	$13,764.00	10-15 days

114		CURB STOP W/360 DEGREE LOCKING WINGNUT; FORD	1"	25	no bid			$112.32	$2,808.00		$100.41	$2,510.25	7-28 days	$107.98	$2,699.50	stock to 6 weeks	no bid			$107.03	$2,675.75	1 week	$106.29	$2,657.25	4 weeks	no bid			$125.41	$3,135.25	10-15 days
115		BALL VALVE PAD WING/CURB STOP; FORD	1.5"	4	no bid			$230.29	$921.16		$184.51	$738.04	7-28 days	$221.40	$885.60	stock to 6 weeks	no bid			$233.95	$935.80	2-3 weeks	$219.60	$878.40	4 weeks	no bid			$257.13	$1,028.52	10-15 days
116		BALL VALVE PAD WING/CURB STOP; FORD	2"	4	no bid			$367.21	$1,468.84		$294.10	$1,176.40	7-28 days	$353.04	$1,412.16	stock to 6 weeks	no bid			$373.04	$1,492.16	2-3 weeks	$349.99	$1,399.96	4 weeks	no bid			$411.58	$1,646.32	10-15 days
117		BALL VALVE PAD WING W/COMPRESSION FITTING; FORD	2"	6	no bid			$412.98	$2,477.88		$364.54	$2,187.24	7-28 days	$397.04	$2,382.24	stock to 6 weeks	no bid			$419.43	$2,516.58	2-3 weeks	$393.82	$2,362.92	4 weeks	no bid			$461.12	$2,766.72	10-15 days
				Totals		$0.00			$20,001.88			$22,617.93			$19,229.50			$0.00			$19,258.29			$18,972.53			$0.00			$22,340.81	
Corp Stops																														
Item				**Estimated**	**United Systems & Software**			**G & C Supply**			**Core & Main**			**Ferguson Waterworks**			**Badger Meter**			**Hayes Pipe Supply**		**Estimated**	**Southern Pipe & Supply**		**Estimated**	**Consolidated Pipe & Supply**		**Estimated**	**Citgo Water**		**Estimated**
Number		**DESCRIPTION**	**SIZE**	**BID QTY.**	**UNIT PRICE**	**Cost**		**UNIT PRICE**	**Cost**		**UNIT PRICE**	**Cost**		**UNIT PRICE**	**Cost**		**UNIT PRICE**	**Cost**		**UNIT PRICE**	**Cost**	**Delivery time**	**UNIT PRICE**	**Cost**	**Delivery time**	**UNIT PRICE**	**Cost**	**Delivery time**	**UNIT PRICE**	**Cost**	**Delivery time**
122		CORPORATION STOP; FORD	3/4" TAPER X 3/4" CTS	10	no bid			$64.72	$647.20	stock	$55.95	$559.50	7-28 days	$62.23	$622.30	stock to 6 weeks	no bid			$61.99	$619.90	1 week	$60.88	$608.80	2 weeks	no bid			$72.27	$722.70	10-15 days
123		CORPORATION STOP; FORD	1" CC TAPER x 1"CTS	20	no bid			$85.10	$1,702.00		$73.61	$1,472.20	7-28 days	$81.81	$1,636.20	stock to 6 weeks	no bid			$80.95	$1,619.00	1 week	$80.50	$1,610.00	2 weeks	no bid			$95.02	$1,900.40	10-15 days
124		CORPORATION STOP, IRON PIPE THREADS; FORD	1"	5	no bid			$85.10	$425.50		$73.61	$368.05	7-28 days	$81.81	$409.05	stock to 6 weeks	no bid			$80.95	$404.75	1 week	$80.58	$402.90	4 weeks	no bid			$95.02	$475.10	10-15 days
				Totals		$0.00			$2,774.70			$2,399.75			$2,667.55			$0.00			$2,643.65			$2,621.70			$0.00			$3,098.20	
Tapping Saddles																														
Item				**Estimated**	**United Systems & Software**			**G & C Supply**			**Core & Main**			**Ferguson Waterworks**		**Estimated**	**Badger Meter**			**Hayes Pipe Supply**		**Estimated**	**Southern Pipe & Supply**		**Estimated**	**Consolidated Pipe & Supply**		**Estimated**	**Citgo Water**		**Estimated**
Number		**DESCRIPTION**	**SIZE**	**BID QTY.**	**UNIT PRICE**	**Cost**		**UNIT PRICE**	**Cost**		**UNIT PRICE**	**Cost**		**UNIT PRICE**	**Cost**	**Delivery time**	**UNIT PRICE**	**Cost**		**UNIT PRICE**	**Cost**	**Delivery time**	**UNIT PRICE**	**Cost**	**Delivery time**	**UNIT PRICE**	**Cost**	**Delivery time**	**UNIT PRICE**	**Cost**	**Delivery time**
143		TAPPING SADDLE; SMITH BLAIR	2" X 3/4" (2.35-2.56)	5	no bid			$27.59	$137.95	2-4 weeks	$27.87	$139.35	7-28 days	$29.51	$147.55	stock to 6 weeks	no bid			$29.17	$145.85	3-4 weeks	no bid			no bid			$55.18	$275.90	10-15 days
144		TAPPING SADDLE; SMITH BLAIR	2" X 1" (1.90-2.13)	4	no bid			$27.59	$110.36		$27.87	$111.48	7-28 days	$29.51	$118.04	stock to 6 weeks	no bid			$29.70	$118.80	3-4 weeks	no bid			no bid			$55.18	$220.72	10-15 days
145		TAPPING SADDLE; SMITH BLAIR	2-1/4" X 3/4" (2.44-2.91)	5	no bid			$49.20	$246.00		$49.70	$248.50	7-28 days	$52.62	$263.10	stock to 6 weeks	no bid			$52.02	$260.10	3-4 weeks	no bid			no bid			no bid		
146		TAPPING SADDLE; SMITH BLAIR	2-1/4" X 1" (2.44-2.91)	5	no bid			$28.15	$140.75		$28.44	$142.20	7-28 days	$52.62	$263.10	stock to 6 weeks	no bid			$29.76	$148.80	3-4 weeks	no bid			no bid			no bid		
149		TAPPING SADDLE; SMITH BLAIR	4" X 3/4" (3.74-4.55)	4	no bid			$27.53	$110.12		$27.82	$111.28	7-28 days	$29.45	$117.80	stock to 6 weeks	no bid			$29.11	$116.44	3-4 weeks	no bid			no bid			$78.65	$314.60	10-15 days
151		TAPPING SADDLE; SMITH BLAIR	4" X 1" (4.50)	4	no bid			$27.53	$110.12		$34.85	$139.40	7-28 days	$29.45	$117.80	stock to 6 weeks	no bid			$29.11	$116.44	3-4 weeks	no bid			no bid			$78.65	$314.60	10-15 days
155		TAPPING SADDLE; SMITH BLAIR	4" X 2" (4.47-5.32)	4	no bid			$34.50	$138.00		$34.85	$139.40	7-28 days	$36.89	$147.56	stock to 6 weeks	no bid			$36.47	$145.88	3-4 weeks	no bid			no bid			$89.76	$359.04	10-15 days
158		TAPPING SADDLE; SMITH BLAIR	6" X 3/4" (6.84-7.60)	5	no bid			$32.40	$162.00		$32.73	$163.65	7-28 days	$34.65	$173.25	stock to 6 weeks	no bid			$34.25	$171.25	3-4 weeks	no bid			no bid			$88.53	$442.65	10-15 days
160		TAPPING SADDLE; SMITH BLAIR	6" X 1" (6.625)	5	no bid			$31.89	$159.45		$32.22	$161.10	7-28 days	$34.11	$170.55	stock to 6 weeks	no bid			$33.71	$168.55	3-4 weeks	no bid			no bid			$88.53	$442.65	10-15 days
161		TAPPING SADDLE: SMITH BLAIR	6" X 1" (6.84-7.60)	5	no bid			$32.40	$162.00		$32.73	$163.65	7-28 days	$34.65	$173.25	stock to 6 weeks	no bid			$34.25	$171.25	3-4 weeks	no bid			no bid			no bid		
163		TAPPING SADDLE; SMITH BLAIR	6" X 2" (5.94-6.69)	5	no bid			$37.47	$187.35		$37.85	$189.25	7-28 days	$40.07	$200.35	stock to 6 weeks	no bid			$39.62	$198.10	3-4 weeks	no bid			no bid			$99.75	$498.75	10-15 days
165		TAPPING SADDLE; SMITH BLAIR	6" X 2" (6.90)	5	no bid			$37.96	$189.80		$38.35	$191.75	7-28 days	$40.60	$203.00	stock to 6 weeks	no bid			$40.13	$200.65	3-4 weeks	no bid			no bid			no bid		
166		TAPPING SADDLE; SMITH BLAIR	8" X 3/4" (9.05)	5	no bid			$38.47	$192.35		$38.86	$194.30	7-28 days	$41.14	$205.70	stock to 6 weeks	no bid			$40.67	$203.35	3-4 weeks	no bid			no bid			$111.16	$555.80	10-15 days
167		TAPPING SADDLE; SMITH BLAIR	8" X 1" (8.54-10.10)	4	no bid			$38.47	$153.88		$38.86	$155.44	7-28 days	$41.14	$164.56	stock to 6 weeks	no bid			$40.67	$162.68	3-4 weeks	no bid			no bid			$111.16	$444.64	10-15 days
171		TAPPING SADDLE; SMITH BLAIR	8" X 2" (8.54-9.79)	2	no bid			$45.71	$91.42		$46.17	$92.34	7-28 days	$48.88	$97.76	stock to 6 weeks	no bid			$48.32	$96.64	3-4 weeks	no bid			no bid			$126.61	$253.22	10-15 days
175		TAPPING SADDLE; SMITH BLAIR	10" X 2" (10.64-12.12)	4	no bid			$51.34	$205.36		$51.86	$207.44	7-28 days	$54.91	$219.64	stock to 6 weeks	no bid			$54.28	$217.12	3-4 weeks	no bid			no bid			$149.22	$596.88	10-15 days
176		TAPPING SADDLE; SMITH BLAIR	12" X 3/4" (12.64-14.32)	2	no bid			$48.61	$97.22		$49.10	$98.20	7-28 days	$51.99	$103.98	stock to 6 weeks	no bid			$51.39	$102.78	3-4 weeks	no bid			no bid			$151.27	$302.54	10-15 days
178		TAPPING SADDLE; SMITH BLAIR	12" X 1" (12.62-14.88)	2	no bid			$48.61	$97.22		$49.10	$98.20	7-28 days	$51.99	$103.98	stock to 6 weeks	no bid			$51.39	$102.78	3-4 weeks	no bid			no bid			$340.64	$681.28	10-15 days
180		TAPPING SADDLE; SMITH BLAIR	12" X 2" (13.20-14.38)	2	no bid			$61.26	$122.52		$61.88	$123.76	7-28 days	$65.52	$131.04	stock to 6 weeks	no bid			$64.76	$129.52	3-4 weeks	no bid			no bid			$172.87	$345.74	10-15 days
181		TAPPING SADDLE; SMITH BLAIR	16"-18" X 2" (C900, DIP) (S 313) (17.40-18.88)	2	no bid			$132.98	$265.96		$134.33	$268.66	7-28 days	$142.22	$284.44	stock to 6 weeks	no bid			$140.57	$281.14	3-4 weeks	no bid			no bid			$207.05	$414.10	10-15 days
182		TAPPING SADDLE; SMITH BLAIR	18"-20" (19.50-20.50)	2	no bid			$173.45	$346.90		$175.20	$350.40	7-28 days	$185.51	$371.02	stock to 6 weeks	no bid			$183.35	$366.70	3-4 weeks	no bid			no bid					
183		TAPPING SADDLE; SMITH BLAIR	20"X2" (21.55-21.65)	2	no bid			$201.64	$403.28		$203.68	$407.36	7-28 days	$215.66	$431.32	stock to 6 weeks	no bid			$213.16	$426.32	3-4 weeks	no bid			no bid			$336.68	$673.36	10-15 days
184		TAPPING SADDLE; SMITH BLAIR	24" X 2" (25.60-26.50)	2	no bid			$229.53	$459.06		$231.85	$463.70	7-28 days	$245.48	$490.96	stock to 6 weeks	no bid			$242.63	$485.26	3-4 weeks	no bid			no bid			$395.88	$791.76	10-15 days
		Incomplete section		**Totals**		$0.00			$4,289.07			$4,360.81			$4,699.75			$0.00			$4,536.40			$0.00			$0.00			$7,928.23	
Repair Clamps																														
Item				**Estimated**	**United Systems & Software**			**G & C Supply**			**Core & Main**			**Ferguson Waterworks**		**Estimated**	**Badger Meter**			**Hayes Pipe Supply**		**Estimated**	**Southern Pipe & Supply**		**Estimated**	**Consolidated Pipe & Supply**		**Estimated**	**Citgo Water**		**Estimated**
Number		**DESCRIPTION**	**SIZE**	**BID QTY.**	**UNIT PRICE**	**Cost**		**UNIT PRICE**	**Cost**		**UNIT PRICE**	**Cost**		**UNIT PRICE**	**Cost**	**Delivery time**	**UNIT PRICE**	**Cost**		**UNIT PRICE**	**Cost**	**Delivery time**	**UNIT PRICE**	**Cost**	**Delivery time**	**UNIT PRICE**	**Cost**	**Delivery time**	**UNIT PRICE**	**Cost**	**Delivery time**
188		REPAIR CLAMP; SMITH BLAIR	3/4" X 6" FL CIR	2	no bid			$69.01	$138.02	stock	$37.62	$75.24	7-28 days	$40.93	$81.86	stock to 6 weeks	no bid			$40.46	$80.92	3-4 weeks	$29.40	$58.80	3 weeks	no bid			$61.56	$123.12	10-15 days
189		REPAIR CLAMP; SMITH BLAIR	1" X 6" FL CIR (PVC)	5	no bid			$38.27	$191.35		$38.66	$193.30	7-28 days	$40.93	$204.65	stock to 6 weeks	no bid			$17.77	$88.85	3-4 weeks	$29.40	$147.00	3 weeks	no bid			$61.98	$309.90	10-15 days
190		REPAIR CLAMP; SMITH BLAIR	1-1/4" X 6"	4	no bid			$16.81	$67.24		$39.89	$159.56	7-28 days	$17.98	$71.92	stock to 6 weeks	no bid			$41.76	$167.04	3-4 weeks	$30.29	$121.16	3 weeks	no bid			$63.15	$252.60	10-15 days

191		REPAIR CLAMP; SMITH BLAIR	1.5" X 6" FL CIR (PVC)	4	no bid			$39.49	$157.96		$39.89	$159.56	7-28 days	$42.24	$168.96	stock to 6 weeks	no bid			no bid			$29.67	$118.68	3 weeks	no bid			$63.90	$255.60	10-15 days
192		REPAIR CLAMP; SMITH BLAIR	2" X 7" FL CIR (2.35-2.63)	8	no bid			$42.28	$338.24		$42.72	$341.76	7-28 days	$45.22	$361.76	stock to 6 weeks	no bid			$43.69	$349.52	3-4 weeks	$61.24	$489.92	3 weeks	no bid			$67.08	$536.64	10-15 days
193		REPAIR CLAMP; SMITH BLAIR	2.5" X 7" FL CIR (2.70-3.00)	6	no bid			$43.30	$259.80		$43.74	$262.44	7-28 days	$46.31	$277.86	stock to 6 weeks	no bid			$44.73	$268.38	3-4 weeks	$59.27	$355.62	3 weeks	no bid			$71.27	$427.62	10-15 days
194		REPAIR CLAMP; SMITH BLAIR	2" X 12.5" FL CIR (2.35-2.63)	2	no bid			$70.96	$141.92		$71.68	$143.36	7-28 days	$75.89	$151.78	stock to 6 weeks	no bid			$73.31	$146.62	3-4 weeks	$91.10	$182.20	3 weeks	no bid			$95.56	$191.12	10-15 days
195		REPAIR CLAMP; SMITH BLAIR	2.5" X 12" FL CIR (2.70-3.00)	2	no bid			$74.55	$149.10		$75.30	$150.60	7-28 days	$79.73	$159.46	stock to 6 weeks	no bid			$77.02	$154.04	3-4 weeks	$91.85	$183.70	3 weeks	no bid			$101.15	$202.30	10-15 days
196		REPAIR CLAMP; SMITH BLAIR	2" X 15" (2.35-2.63)	2	no bid			$81.86	$163.72		$82.69	$165.38	7-28 days	$87.55	$175.10	stock to 6 weeks	no bid			$84.58	$169.16	3-4 weeks	$106.82	$213.64	3 weeks	no bid			$119.68	$239.36	10-15 days
197		REPAIR CLAMP; SMITH BLAIR	2" X 25" (2.35-2.63)	2	no bid			$146.17	$292.34		$147.65	$295.30	7-28 days	$156.33	$312.66	stock to 6 weeks	no bid			$151.02	$302.04	3-4 weeks	$180.98	$361.96	3 weeks	no bid			$264.01	$528.02	10-15 days
198		REPAIR CLAMP; SMITH BLAIR	2.25" X 25" (2.70-3.00)	2	no bid			$156.88	$313.76		$158.47	$316.94	7-28 days	$167.79	$335.58	stock to 6 weeks	no bid			$162.07	$324.14	3-4 weeks	$187.99	$375.98	3 weeks	no bid			$79.24	$158.48	10-15 days
199		REPAIR CLAMP; SMITH BLAIR	3" X 7.5" FL CIR (3.73-4.00)	2	no bid			$48.52	$97.04		$49.02	$98.04	7-28 days	$51.89	$103.78	stock to 6 weeks	no bid			$50.13	$100.26	3-4 weeks	$67.10	$134.20	3 weeks	no bid			no bid		
200		REPAIR CLAMP; SMITH BLAIR	3" X 12" FL CIR (3.46-3.70)	2	no bid			$78.60	$157.20		$79.39	$158.78	7-28 days	$84.06	$168.12	stock to 6 weeks	no bid			$81.21	$162.42	3-4 weeks	$104.11	$208.22	3 weeks	no bid			$113.58	$227.16	10-15 days
201		REPAIR CLAMP; SMITH BLAIR	4" X 7.5" FL CIR (3.96-4.25)	2	no bid			$50.26	$100.52		$50.77	$101.54	7-28 days	$53.75	$107.50	stock to 6 weeks	no bid			$51.93	$103.86	3-4 weeks	$63.52	$127.04	3 weeks	no bid			$86.86	$173.72	10-15 days
202		REPAIR CLAMP; SMITH BLAIR	4" X 7.5" FL CIR (4.45-4.73)	2	no bid			$52.03	$104.06		$52.56	$105.12	7-28 days	$55.65	$111.30	stock to 6 weeks	no bid			$53.76	$107.52	3-4 weeks	$63.50	$127.00	3 weeks	no bid			no bid		
203		REPAIR CLAMP; SMITH BLAIR	4" X 7.5" FL CIR (4.74-5.14)	6	no bid			$53.86	$323.16		$54.40	$326.40	7-28 days	$57.60	$345.60	stock to 6 weeks	no bid			$55.65	$333.90	3-4 weeks	$70.78	$424.68	3 weeks	no bid			no bid		
204		REPAIR CLAMP; SMITH BLAIR	4 X 12.5" FL CIR (4.74-5.14)	2	no bid			$88.25	$176.50		$89.15	$178.30	7-28 days	$94.39	$188.78	stock to 6 weeks	no bid			$91.18	$182.36	3-4 weeks	$101.94	$203.88	3 weeks	no bid			$139.02	$278.04	10-15 days
205		REPAIR CLAMP; SMITH BLAIR	4 X 15" FL CIR (PVC) (4.74-5.14)	2	no bid			$106.47	$212.94		$107.55	$215.10	7-28 days	$113.87	$227.74	stock to 6 weeks	no bid			$109.99	$219.98	3-4 weeks	$117.03	$234.06	3 weeks	no bid			$151.21	$302.42	10-15 days
207		REPAIR CLAMP; SMITH BLAIR	6" X 7" FL CIR (6.84-7.24)	10	no bid			$63.56	$635.60		$64.20	$642.00	7-28 days	$67.98	$679.80	stock to 6 weeks	no bid			$65.66	$656.60	3-4 weeks	$70.38	$703.80	3 weeks	no bid			$104.55	$1,045.50	10-15 days
208		REPAIR CLAMP; SMITH BLAIR	6" X 7.5" FL CIR (6.56-6.96)	4	no bid			$62.18	$248.72		$62.82	$251.28	7-28 days	$66.51	$266.04	stock to 6 weeks	no bid			$64.24	$256.96	3-4 weeks	$70.84	$283.36	3 weeks	no bid			$102.28	$409.12	10-15 days
210		REPAIR CLAMP; SMITH BLAIR	6" X 12" FL CIR (6.56-6.96)	2	no bid			$100.19	$200.38		$101.20	$202.40	7-28 days	$107.15	$214.30	stock to 6 weeks	no bid			$103.50	$207.00	3-4 weeks	$110.41	$220.82	3 weeks	no bid			$164.24	$328.48	10-15 days
211		REPAIR CLAMP; SMITH BLAIR	6" X 12" FL CIR (6.84-7.24)	4	no bid			$101.65	$406.60		$102.68	$410.72	7-28 days	$107.15	$428.60	stock to 6 weeks	no bid			$105.02	$420.08	3-4 weeks	$122.66	$490.64	3 weeks	no bid			$167.28	$669.12	10-15 days
212		REPAIR CLAMP; SMITH BLAIR	6" X 12.5" (7.05-7.45)	2	no bid			$103.32	$206.64		$104.37	$208.74	7-28 days	$110.51	$221.02	stock to 6 weeks	no bid			$106.74	$213.48	3-4 weeks	$122.66	$245.32	3 weeks	no bid			$167.28	$334.56	10-15 days
213		REPAIR CLAMP; SMITH BLAIR	6" X 15" FL CIR (6.56-6.96)	2	no bid			$112.75	$225.50		$113.89	$227.78	7-28 days	$120.59	$241.18	stock to 6 weeks	no bid			$116.49	$232.98	3-4 weeks	$159.85	$319.70	3 weeks	no bid			$180.34	$360.68	10-15 days
214		REPAIR CLAMP; SMITH BLAIR	6" X 15" (6.84-7.24)	2	no bid			$118.13	$236.26		$119.33	$238.66	7-28 days	$127.99	$255.98	stock to 6 weeks	no bid			$122.05	$244.10	3-4 weeks	$143.12	$286.24	3 weeks	no bid			$184.89	$369.78	10-15 days
215		REPAIR CLAMP; SMITH BLAIR	6" X 15" (7.05-7.45)	2	no bid			$119.67	$239.34		$120.88	$241.76	7-28 days	$127.99	$255.98	stock to 6 weeks	no bid			$123.63	$247.26	3-4 weeks	$143.12	$286.24	3 weeks	no bid			$184.89	$369.78	10-15 days
217		REPAIR CLAMP; SMITH BLAIR	8" X 7" FL CIR (8.54-8.94)	4	no bid			$73.69	$294.76		$74.44	$297.76	7-28 days	$78.81	$315.24	stock to 6 weeks	no bid			$76.14	$304.56	3-4 weeks	$84.93	$339.72	3 weeks	no bid			$122.63	$490.52	10-15 days
218		REPAIR CLAMP; SMITH BLAIR	8" X 7" FL CIR (8.99-9.39)	8	no bid			$76.03	$608.24		$76.80	$614.40	7-28 days	$81.32	$650.56	stock to 6 weeks	no bid			$78.50	$628.00	3-4 weeks	$84.96	$679.68	3 weeks	no bid			$122.63	$981.04	10-15 days
219		REPAIR CLAMP; SMITH BLAIR	8" X 12" FL CIR (8.99-9.39, DIP)	2	no bid			$121.75	$243.50		$122.98	$245.96	7-28 days	$130.21	$260.42	stock to 6 weeks	no bid			$125.79	$251.58	3-4 weeks	$122.92	$245.84	3 weeks	no bid			$196.46	$392.92	10-15 days
220		REPAIR CLAMP; SMITH BLAIR	8" X 15" (8.54-8.94)	2	no bid			$140.90	$281.80		$142.33	$284.66	7-28 days	$150.69	$301.38	stock to 6 weeks	no bid			$145.57	$291.14	3-4 weeks	$150.48	$300.96	3 weeks	no bid			$224.61	$449.22	10-15 days
221		REPAIR CLAMP; SMITH BLAIR	8" X 15" (8.99-9.39)	2	no bid			$145.08	$290.16		$146.55	$293.10	7-28 days	$155.26	$310.52	stock to 6 weeks	no bid			$149.88	$299.76	3-4 weeks	$150.48	$300.96	3 weeks	no bid			$224.61	$449.22	10-15 days
222		REPAIR CLAMP; SMITH BLAIR	10" X 15" FL CIR (DIP) (11.04-11.44)	2	no bid			$181.16	$362.32		$182.99	$365.98	7-28 days	$193.75	$387.50	stock to 6 weeks	no bid			$187.16	$374.32	3-4 weeks	$175.52	$351.04	3 weeks	no bid			no bid		
223		REPAIR CLAMP; SMITH BLAIR	10" x 20" (11.04-11.44)	2	no bid			$251.09	$502.18		$253.63	$507.26	7-28 days	$268.54	$537.08	stock to 6 weeks	no bid			$259.39	$518.78	3-4 weeks	$281.49	$562.98	3 weeks	no bid			$387.04	$774.08	10-15 days
224		REPAIR CLAMP; SMITH BLAIR	12" X 7" FL CIR (13.10-13.50)	2	no bid			$104.38	$208.76		$105.44	$210.88	7-28 days	$111.64	$223.28	stock to 6 weeks	no bid			$107.83	$215.66	3-4 weeks	$111.44	$222.88	3 weeks	no bid			$182.35	$364.70	10-15 days
225		REPAIR CLAMP; SMITH BLAIR	12" X 12" FL CIR (DIP) (13.10-13.50)	2	no bid			$167.99	$335.98		$169.69	$339.38	7-28 days	$179.67	$359.34	stock to 6 weeks	no bid			$177.99	$355.98	3-4 weeks	$166.35	$332.70	3 weeks	no bid			$291.66	$583.32	10-15 days
226		REPAIR CLAMP; SMITH BLAIR	12' X 15' FL CIR (DIP) (13.10 - 13.50)	2	no bid			$208.75	$417.50		$210.86	$421.72	7-28 days	$223.26	$446.52	stock to 6 weeks	no bid			$220.67	$441.34	3-4 weeks	$194.49	$388.98	3 weeks	no bid			$329.78	$659.56	10-15 days
227		REPAIR CLAMP; SMITH BLAIR	16" X 15" (17.15-17.90)	2	no bid			$433.33	$866.66		$437.72	$875.44	7-28 days	$463.46	$926.92	stock to 6 weeks	no bid			$458.07	$916.14	3-4 weeks	$311.89	$623.78	3 weeks	no bid			no bid		
229		REPAIR CLAMP; SMITH BLAIR	16" X 20" FL CIR (17.82-18.57)	2	no bid			$586.87	$1,173.74		$603.89	$1,207.78	7-28 days	$639.41	$1,278.82	stock to 6 weeks	no bid			$631.98	$1,263.96	3-4 weeks	$404.98	$809.96	3 weeks	no bid			no bid		
230		REPAIR CLAMP; SMITH BLAIR	16" X 30" (17.10-18.30)	2	no bid			$857.25	$1,714.50		$898.59	$1,797.18	7-28 days	$951.45	$1,902.90	stock to 6 weeks	no bid			$940.39	$1,880.78	3-4 weeks	$659.73	$1,319.46	3 weeks	no bid			no bid		
231		REPAIR CLAMP; SMITH BLAIR	18" X 20" FL CIR (19.23-19.98)	2	no bid			$608.41	$1,216.82		$625.94	$1,251.88	7-28 days	$663.00	$1,326.00	stock to 6 weeks	no bid			$655.05	$1,310.10	3-4 weeks	$462.98	$925.96	3 weeks	no bid			$919.32	$1,838.64	10-15 days
232		REPAIR CLAMP; SMITH BLAIR	20" X 20" (21.52-22.27)	2	no bid			$644.27	$1,288.54		$662.84	$1,325.68	7-28 days	$701.82	$1,403.64	stock to 6 weeks	no bid			$692.50	$1,385.00	3-4 weeks	$470.94	$941.88	3 weeks	no bid			$524.12	$1,048.24	10-15 days
233		REPAIR CLAMP; SMITH BLAIR	24" X 30" FL CIR (25.70-26.80)	2	no bid			$1,621.20	$3,242.40		$1,715.56	$3,431.12	7-28 days	$1,816.47	$3,632.94	stock to 6 weeks	no bid			$1,795.35	$3,590.70	3-4 weeks	$1,207.98	$2,415.96	3 weeks	no bid			no bid		
234		REPAIR CLAMP; SMITH BLAIR	24" X 20" FL CIR (25.70-26.80)	2	no bid			$1,102.04	$2,204.08		$1,133.79	$2,267.58	7-28 days	$1,201.66	$2,403.32	stock to 6 weeks	no bid			$1,186.53	$2,373.06	3-4 weeks	$799.89	$1,599.78	3 weeks	no bid			no bid		
237		REPAIR CLAMP; SMITH BLAIR W/1" CC TAP	6"X7.5" W/1" TAP (6.84-7.24)	2	no bid			$89.29	$178.58		$90.19	$180.38	7-28 days	$95.49	$190.98	stock to 6 weeks	no bid			$94.39	$188.78	3-4 weeks	$92.92	$185.84	3 weeks	no bid			$220.03	$440.06	10-15 days
238		REPAIR CLAMP; SMITH BLAIR W/1" CC TAP	8"X7.5" W/1" TAP (8.99-9.39)	2	no bid			$101.77	$203.54		$102.80	$205.60	7-28 days	$108.85	$217.70	stock to 6 weeks	no bid			$107.59	$215.18	3-4 weeks	$103.49	$206.98	3 weeks	no bid			$249.52	$499.04	10-15 days
		Incomplete section		**Totals**		$0.00			$21,417.97			$21,993.80			$23,192.37			$0.00			$22,544.29			$19,659.20			$0.00			$17,063.68	
HYMAX																															
Item				**Estimated**	**United Systems & Software**			**G & C Supply**			**Core & Main**			**Ferguson Waterworks**		**Estimated**	**Badger Meter**			**Hayes Pipe Supply**		**Estimated**	**Southern Pipe & Supply**		**Estimated**	**Consolidated Pipe & Supply**		**Estimated**	**Citgo Water**		**Estimated**
Number		**DESCRIPTION**	**SIZE**	**BID QTY.**	**UNIT PRICE**	**Cost**		**UNIT PRICE**	**Cost**		**UNIT PRICE**	**Cost**		**UNIT PRICE**	**Cost**	**Delivery time**		**Cost**		**UNIT PRICE**	**Cost**	**Delivery time**	**UNIT PRICE**	**Cost**	**Delivery time**	**UNIT PRICE**	**Cost**	**Delivery time**	**UNIT PRICE**	**Cost**	**Delivery time**

240		HYMAX; KRAUSZ	1.5" (1.61-2.13)	4	no bid			$154.83	$619.32	stock	$148.16	$592.64	7-28 days	$331.16	$1,324.64	stock to 6 weeks	no bid			no bid			$156.38	$625.52	12 weeks	no bid			$153.38	$613.52	10-15 days
241		HYMAX; KRAUSZ	2" (2.1-3.03)	4	no bid			$163.24	$652.96		$156.22	$624.88	7-28 days	$349.16	$1,396.64	stock to 6 weeks	no bid			no bid			$174.58	$698.32	12 weeks	no bid			$164.88	$659.52	10-15 days
242		HYMAX; KRAUSZ	3" (3.46-4.33)	4	no bid			$215.34	$861.36		$206.07	$824.28	7-28 days	$460.60	$1,842.40	stock to 6 weeks	no bid			no bid			$230.30	$921.20	12 weeks	no bid			$217.51	$870.04	10-15 days
243		HYMAX; KRAUSZ	4" (4.25-5.63)	4	no bid			$275.92	$1,103.68		$264.05	$1,056.20	7-28 days	$590.21	$2,360.84	stock to 6 weeks	no bid			no bid			$302.21	$1,208.84	12 weeks	no bid			$278.71	$1,114.84	10-15 days
244		HYMAX; KRAUSZ	6" (6.42-7.68)	10	no bid			$358.79	$3,587.90		$349.70	$3,497.00	7-28 days	$781.66	$7,816.60	stock to 6 weeks	no bid			no bid			$390.83	$3,908.30	12 weeks	no bid			$369.11	$3,691.10	10-15 days
245		HYMAX; KRAUSZ	8" (8.54-9.84)	10	no bid			$403.08	$4,030.80		$394.82	$3,948.20	7-28 days	$882.52	$8,825.20	stock to 6 weeks	no bid			no bid			$436.00	$4,360.00	12 weeks	no bid			$416.74	$4,167.40	10-15 days
246		HYMAX; KRAUSZ	10" (10.70-12.00)	2	no bid			$530.75	$1,061.50		$507.90	$1,015.80	7-28 days	$1,135.29	$2,270.58	stock to 6 weeks	no bid			no bid			$567.05	$1,134.10	12 weeks	no bid			$536.11	$1,072.22	10-15 days
247		HYMAX; KRAUSZ	12" (12.40-13.66)	2	no bid			$626.46	$1,252.92		$599.49	$1,198.98	7-28 days	$1,340.02	$2,680.04	stock to 6 weeks	no bid			no bid			$677.98	$1,355.96	12 weeks	no bid			$632.79	$1,265.58	10-15 days
				Totals		$0.00			$13,170.44			$12,757.98			$28,516.94			$0.00			$0.00			$14,212.24			$0.00			$13,454.22	
Pipe																														
Item Number		DESCRIPTION	SIZE	Estimated BID QTY.	United Systems & Software UNIT PRICE	Cost		G & C Supply UNIT PRICE	Cost		Core & Main UNIT PRICE	Cost		Ferguson Waterworks UNIT PRICE	Cost	Estimated Delivery time	Badger Meter UNIT PRICE	Cost		Hayes Pipe Supply UNIT PRICE	Cost	Estimated Delivery time	Southern Pipe & Supply UNIT PRICE	Cost	Estimated Delivery time	Consolidated Pipe & Supply UNIT PRICE	Cost	Estimated Delivery time	Citgo Water UNIT PRICE	Cost	Estimated Delivery time
254		PEX PIPE; REHAU 300 FT. ROLL	3/4"	2000	no bid			$1.00	$2,000.00	stock	$1.53	$3,060.00	7-28 days	$0.88	$1,760.00	stock to 6 weeks	no bid			$0.925	$1,850.00	1 week	no bid			no bid			$0.79	$1,580.00	10-15 days
255		PEX PIPE; REHAU 300 FT. ROLL	1"	4000	no bid			$1.45	$5,800.00	stock	$2.31	$9,240.00	7-28 days	$1.32	$5,280.00	stock to 6 weeks	no bid			$1.40	$5,600.00	1 week	no bid			no bid			$1.28	$5,120.00	10-15 days
256		PEX PIPE; REHAU 300 FT. ROLL	2"	300	no bid			$9.81	$2,943.00	stock	$14.32	$4,296.00	7-28 days	$8.00	$2,400.00	stock to 6 weeks	no bid			$8.67	$2,601.00	2 weeks	no bid			no bid			$7.98	$2,394.00	10-15 days
258		CL-350 DUCTILE IRON WATER PIPE W/ BITUMINOUS SEAL COATING INSIDE & OUTSIDE	3"	60	no bid			no bid			$73.96	$4,437.60	7-28 days	no bid			no bid			$73.78	$4,426.80	1 week	no bid			no bid			$78.07	$4,684.20	10-15 days
263		CL-350 DUCTILE IRON WATER PIPE W/ BITUMINOUS SEAL COATING INSIDE & OUTSIDE	12"	40	no bid			no bid			$56.20	$2,248.00	7-28 days	$55.61	$2,224.40	stock to 6 weeks	no bid			$56.08	$2,243.20	1 week	no bid			no bid			$57.05	$2,282.00	10-15 days
264		CL-350 DUCTILE IRON WATER PIPE W/ BITUMINOUS SEAL COATING INSIDE & OUTSIDE	16"	40	no bid			no bid			$90.95	$3,638.00	7-28 days	$90.00	$3,600.00	stock to 6 weeks	no bid			$89.07	$3,562.80	2-3 weeks	no bid			no bid			$96.00	$3,840.00	10-15 days
265		CL-350 DUCTILE IRON WATER PIPE W/ BITUMINOUS SEAL COATING INSIDE & OUTSIDE	18"	40	no bid			no bid			$107.26	$4,290.40	7-28 days	$106.14	$4,245.60	stock to 6 weeks	no bid			$105.04	$4,201.60	2-3 weeks	no bid			no bid			no bid		
266		CL-350 DUCTILE IRON WATER PIPE W/ BITUMINOUS SEAL COATING INSIDE & OUTSIDE	24"	40	no bid			no bid			$170.32	$6,812.80	7-28 days	$168.54	$6,741.60	stock to 6 weeks	no bid			$166.83	$6,673.20	2-3 weeks	no bid			no bid			$179.87	$7,194.80	10-15 days
267		CL-350 DUCTILE IRON WATER PIPE W/ BITUMINOUS SEAL COATING INSIDE & OUTSIDE	36"	40	no bid			no bid			$395.56	$15,822.40	7-28 days	$391.44	$15,657.60	stock to 6 weeks	no bid			$385.42	$15,416.80	2-3 weeks	no bid			no bid			$417.59	$16,703.60	10-15 days
268		C900 WATER PIPE SDR 14	4"	100	no bid			no bid			$6.62	$662.00	7-28 days	$6.45	$645.00	stock to 6 weeks	no bid			$6.61	$661.00	1 week	no bid			no bid			$6.46	$646.00	10-15 days
269		C900 WATER PIPE SDR 14	6"	200	no bid			no bid			$13.29	$2,658.00	7-28 days	$12.91	$2,582.00	stock to 6 weeks	no bid			$13.14	$2,628.00	1 week	no bid			no bid			$12.98	$2,596.00	10-15 days
270		C900 WATER PIPE SDR 14	8"	200	no bid			no bid			$22.88	$4,576.00	7-28 days	$22.24	$4,448.00	stock to 6 weeks	no bid			$22.62	$4,524.00	1 week	no bid			no bid			$22.36	$4,472.00	10-15 days
271		C900 WATER PIPE SDR 14	10"	40	no bid			no bid			$34.87	$1,394.80	7-28 days	$33.64	$1,345.60	stock to 6 weeks	no bid			$34.47	$1,378.80	2 weeks	no bid			no bid			$34.07	$1,362.80	10-15 days
273		SDR 11, 2" IPS BLACK WATER PIPE	2"	100	no bid			no bid			$2.25	$225.00	7-28 days	no bid						$1.94	$194.00	2 weeks	no bid			no bid			$0.90	$90.00	10-15 days
		Incomplete section		Totals		$0.00			$10,743.00			$63,361.00			$50,929.80			$0.00			$55,961.20			$0.00			$0.00			$52,965.40	
Pipe Fittings																														
Item Number		DESCRIPTION	SIZE	Estimated BID QTY.	United Systems & Software UNIT PRICE	Cost		G & C Supply UNIT PRICE	Cost		Core & Main UNIT PRICE	Cost		Ferguson Waterworks UNIT PRICE	Cost	Estimated Delivery time	Badger Meter UNIT PRICE	Cost		Hayes Pipe Supply UNIT PRICE	Cost	Estimated Delivery time	Southern Pipe & Supply UNIT PRICE	Cost	Estimated Delivery time	Consolidated Pipe & Supply UNIT PRICE	Cost	Estimated Delivery time	Citgo Water UNIT PRICE	Cost	Estimated Delivery time
277		PIPE STIFFENER (PLASTIC)	3/4"	1000	no bid			$0.35	$350.00	stock	$0.53	$530.00	7-28 days	$0.53	$530.00	stock to 6 weeks	no bid			$0.38	$380.00	1 week	no bid			no bid			$0.44	$440.00	10-15 days
278		PIPE STIFFENER (PLASTIC)	1"	2000	no bid			$0.41	$820.00		$0.58	$1,160.00	7-28 days	$0.60	$1,200.00	stock to 6 weeks	no bid			$0.43	$860.00	1 week	no bid			no bid			$0.31	$620.00	10-15 days
279		PIPE INSERT; FORD #55 STAINLESS STEEL	2"	14	no bid			$3.15	$44.10		$3.15	$44.10	7-28 days	$3.95	$55.30	stock to 6 weeks	no bid			$3.29	$46.06	1 week	no bid			no bid			$3.10	$43.40	10-15 days
293		CAP; TYLER	2"	2	no bid			$68.86	$137.72		$72.28	$144.56	7-28 days	no bid			no bid			$73.11	$146.22	1 week	no bid			no bid			$70.67	$141.34	10-15 days
294		CAP; TYLER	3"	2	no bid			$35.73	$71.46		$37.50	$75.00	7-28 days	$38.57	$77.14	stock to 6 weeks	no bid			$37.94	$75.88	1 week	no bid			no bid			$43.92	$87.84	10-15 days
295		CAP; TYLER	4"	2	no bid			$36.70	$73.40		$38.87	$77.74	7-28 days	$39.97	$79.94	stock to 6 weeks	no bid			$37.94	$75.88	1 week	no bid			no bid			$54.41	$108.82	10-15 days
296		CAP; TYLER	4" X 2"	2	no bid			$76.00	$152.00		$79.78	$159.56	7-28 days	$82.03	$164.06	stock to 6 weeks	no bid			$80.69	$161.38	1 week	no bid			no bid			$60.31	$120.62	10-15 days
297		CAP; TYLER	6"	2	no bid			$64.38	$128.76		$68.19	$136.38	7-28 days	$93.69	$187.38	stock to 6 weeks	no bid			$68.97	$137.94	1 week	no bid			no bid			$97.68	$195.36	10-15 days
298		CAP; TYLER	6" X 2"	2	no bid			$102.08	$204.16		$109.10	$218.20	7-28 days	$112.18	$224.36	stock to 6 weeks	no bid			$110.35	$220.70	1 week	no bid			no bid			$114.72	$229.44	10-15 days
299		CAP; TYLER	8"	2	no bid			$105.88	$211.76		$111.14	$222.28	7-28 days	$114.28	$228.56	stock to 6 weeks	no bid			$112.42	$224.84	1 week	no bid			no bid			$146.19	$292.38	10-15 days
300		CAP; TYLER	8" X 2"	2	no bid			$141.64	$283.28		$151.37	$302.74	7-28 days	$155.66	$311.32	stock to 6 weeks	no bid			$153.11	$306.22	1 week	no bid			no bid			$162.58	$325.16	10-15 days
345		ANCHOR COUPLING; TYLER	6" X 13" LONG	6	no bid			$257.89	$1,547.34		$270.69	$1,624.14	7-28 days	$278.36	$1,670.16	stock to 6 weeks	no bid			$273.80	$1,642.80	1 week	no bid			no bid			$218.96	$1,313.76	10-15 days
346		ANCHOR COUPLING; TYLER	6" X 18" LONG	6	no bid			$284.52	$1,707.12		$298.64	$1,791.84	7-28 days	$307.11	$1,842.66	stock to 6 weeks	no bid			$302.07	$1,812.42	1 week	no bid			no bid			$302.87	$1,817.22	10-15 days

347		ANCHOR COUPLING; TYLER	6" X 24" LONG	6	no bid			$377.06	$2,262.36		$402.96	$2,417.76	7-28 days	$414.39	$2,486.34	stock to 6 weeks	no bid			$419.09	$2,514.54	1 week	no bid			no bid			$351.38	$2,108.28	10-15 days
		Incomplete section		**Totals**		$0.00			$7,993.46			$8,904.30			$9,057.22			$0.00			$8,604.88			$0.00			$0.00			$7,843.62	
Accessories																														
Item				**Estimated**	**United Systems & Software**			**G & C Supply**			**Core & Main**			**Ferguson Waterworks**		**Estimated**	**Badger Meter**			**Hayes Pipe Supply**		**Estimated**	**Southern Pipe & Supply**		**Estimated**	**Consolidated Pipe & Supply**		**Estimated**	**Citgo Water**		**Estimated**
Number		**DESCRIPTION**	**SIZE**	**BID QTY.**	**UNIT PRICE**	**Cost**		**UNIT PRICE**	**Cost**		**UNIT PRICE**	**Cost**		**UNIT PRICE**	**Cost**	**Delivery time**	**UNIT PRICE**	**Cost**			**UNIT PRICE**	**Cost**	**Delivery time**	**UNIT PRICE**	**Cost**	**Delivery time**	**UNIT PRICE**	**Cost**	**Delivery time**	**UNIT PRICE**	**Cost**	**Delivery time**
389		M.J. ACC KIT; UFCO	3"	4	no bid			$31.80	$127.20	stock	$27.28	$109.12	7-28 days	$13.78	$55.12	stock to 6 weeks	no bid			$25.81	$103.24	1 week	no bid			no bid			$26.67	$106.68	10-15 days
390		M.J. ACC KIT; SIGMA	4"	5	no bid			$39.12	$195.60		$35.46	$177.30	7-28 days	$18.50	$92.50	stock to 6 weeks	no bid			$33.55	$167.75	1 week	no bid			no bid			$34.67	$173.35	10-15 days
391		M.J. BOLT PACK SET	6"	10	no bid			$49.74	$497.40		$47.73	$477.30	7-28 days	$26.18	$261.80	stock to 6 weeks	no bid			$29.68	$296.80	1 week	no bid			no bid			$46.67	$466.70	10-15 days
392		M.J. BOLT PACK SET	8"	4	no bid			$54.34	$217.36		$53.19	$212.76	7-28 days	$26.95	$107.80	stock to 6 weeks	no bid			$33.55	$134.20	1 week	no bid			no bid			$52.00	$208.00	10-15 days
393		M.J. ACC KIT; SIGMA	10"	2	no bid			$81.88	$163.76		$75.69	$151.38	7-28 days	$39.31	$78.62	stock to 6 weeks	no bid			$71.62	$143.24	1 week	no bid			no bid			$74.00	$148.00	10-15 days
394		M.J. ACC KIT	12"	4	no bid			$86.39	$345.56		$77.73	$310.92	7-28 days	$39.34	$157.36	stock to 6 weeks	no bid			$73.35	$293.40	1 week	no bid			no bid			$76.00	$304.00	10-15 days
395		M.J. ACC KIT	16"	4	no bid			$139.50	$558.00		$126.82	$507.28	7-28 days	$60.44	$241.76	stock to 6 weeks	no bid			$120.00	$480.00	1 week	no bid			no bid			$106.86	$427.44	10-15 days
397		TRANSITION GASKET	4"	4	no bid			$10.47	$41.88		$10.91	$43.64	7-28 days	$10.98	$43.92	stock to 6 weeks	no bid			$10.33	$41.32	1 week	no bid			no bid			$10.67	$42.68	10-15 days
398		TRANSITION GASKET	6"	8	no bid			$12.20	$97.60		$11.60	$92.80	7-28 days	$16.13	$129.04	stock to 6 weeks	no bid			$10.33	$82.64	1 week	no bid			no bid			$11.33	$90.64	10-15 days
399		TRANSITION GASKET	8"	6	no bid			$17.89	$107.34		$15.69	$94.14	7-28 days	$26.94	$161.64	stock to 6 weeks	no bid			$14.84	$89.04	1 week	no bid			no bid			$15.33	$91.98	10-15 days
400		MEGALUG D. I.; FORD	3"	4	no bid			$49.25	$197.00		$46.91	$187.64	7-28 days	$48.79	$195.16	stock to 6 weeks	no bid			$44.39	$177.56	1 week	no bid			no bid			$55.41	$221.64	10-15 days
401		MEGALUG AND ACC KIT (D I); SIGMA	4"	4	no bid			$43.34	$173.36		$50.82	$203.28	7-28 days	$52.86	$211.44	stock to 6 weeks	no bid			$48.09	$192.36	1 week	no bid			no bid			$52.06	$208.24	10-15 days
402		MEGALUG AND ACC KIT (D I); SIGMA	6"	4	no bid			$62.33	$249.32		$63.04	$252.16	7-28 days	$65.57	$262.28	stock to 6 weeks	no bid			$59.65	$238.60	1 week	no bid			no bid			$64.75	$259.00	10-15 days
403		MEGALUG AND ACC KIT (D I); EBAA	8"	2	no bid			$75.31	$150.62		$86.01	$172.02	7-28 days	$89.46	$178.92	stock to 6 weeks	no bid			$81.38	$162.76	1 week	no bid			no bid			$87.89	$175.78	10-15 days
404		MEGALUG AND ACC KIT (D I); EBAA	10"	2	no bid			$110.16	$220.32		$121.68	$243.36	7-28 days	$126.56	$253.12	stock to 6 weeks	no bid			$115.13	$230.26	1 week	no bid			no bid			$125.57	$251.14	10-15 days
405		MEGALUG AND ACC KIT (D I); FORD	12"	2	no bid			$96.64	$193.28		$163.70	$327.40	7-28 days	$170.27	$340.54	stock to 6 weeks	no bid			$154.90	$309.80	1 week	no bid			no bid			$168.33	$336.66	10-15 days
406		MEGALUG AND ACC KIT (D I)	16"	4	no bid			$283.35	$1,133.40		$371.86	$1,487.44	7-28 days	$305.48	$1,221.92	stock to 6 weeks	no bid			$277.89	$1,111.56	1-2 weeks	no bid			no bid			$307.15	$1,228.60	10-15 days
407		MEGALUG AND ACC KIT (D I)	24"	2	no bid			$546.23	$1,092.46		$693.63	$1,387.26	7-28 days	$682.61	$1,365.22	stock to 6 weeks	no bid			$620.96	$1,241.92	1-2 weeks	no bid			no bid			$695.88	$1,391.76	10-15 days
408		MEGALUG AND ACC KIT (D.I.)	36"	2	no bid			$1,988.33	$3,976.66	stock	$2,064.00	$4,128.00	7-28 days	$1,814.60	$3,629.20	stock to 6 weeks	no bid			$1,826.35	$3,652.70	1-2 weeks	no bid			no bid			$1,838.42	$3,676.84	10-15 days
412		MEGALUG AND ACC KIT (C900); SIGMA	4"	10	no bid			$68.05	$680.50	stock	$58.64	$586.40	7-28 days	$60.99	$609.90	stock to 6 weeks	no bid			$55.49	$554.90	1 week	no bid			no bid			$57.33	$573.30	10-15 days
413		MEGALUG AND ACC KIT (C900); SIGMA	6"	40	no bid			$76.43	$3,057.20	stock	$73.30	$2,932.00	7-28 days	$76.24	$3,049.60	stock to 6 weeks	no bid			$69.36	$2,774.40	1 week	no bid			no bid			$71.67	$2,866.80	10-15 days
414		MEGALUG AND ACC KIT (C900); SIGMA	8"	30	no bid			$97.92	$2,937.60	stock	$98.71	$2,961.30	7-28 days	$102.67	$3,080.10	stock to 6 weeks	no bid			$93.40	$2,802.00	1 week	no bid			no bid			$96.51	$2,895.30	10-15 days
415		C900 MEGALUG; EBAA	10"	6	no bid			$149.28	$895.68	stock	$172.01	$1,032.06	7-28 days	$178.91	$1,073.46	stock to 6 weeks	no bid			$162.76	$976.56	1 week	no bid			no bid			$168.18	$1,009.08	10-15 days
416		C900 MEGALUG; SIGMA	12"	6	no bid			$150.88	$905.28	stock	$180.31	$1,081.86	7-28 days	$187.56	$1,125.36	stock to 6 weeks	no bid			$198.37	$1,190.22	1 week	no bid			no bid			$176.30	$1,057.80	10-15 days
417		MEGALUG AND ACC KIT (DI)	18"	4	no bid			no bid			$396.78	$1,587.12	7-28 days	$440.99	$1,763.96	stock to 6 weeks	no bid			$375.45	$1,501.80	1-2 weeks	no bid			no bid			$440.99	$1,763.96	10-15 days
418		MEGALUG AND ACC KIT (D I)	20"	4	no bid			no bid			$484.24	$1,936.96	7-28 days	$539.89	$2,159.56	stock to 6 weeks	no bid			$458.21	$1,832.84	1-2 weeks	no bid			no bid			$473.48	$1,893.92	10-15 days
		Incomplete section		**Totals**		$0.00			$18,214.38			$22,682.90			$21,849.30			$0.00			$20,781.87			$0.00			$0.00			$21,869.29	
Valves																														
Item				**Estimated**	**United Systems & Software**			**G & C Supply**			**Core & Main**			**Ferguson Waterworks**		**Estimated**	**Badger Meter**			**Hayes Pipe Supply**		**Estimated**	**Southern Pipe & Supply**		**Estimated**	**Consolidated Pipe & Supply**		**Estimated**	**Citgo Water**		**Estimated**
Number		**DESCRIPTION**	**SIZE**	**BID QTY.**	**UNIT PRICE**	**Cost**		**UNIT PRICE**	**Cost**		**UNIT PRICE**	**Cost**		**UNIT PRICE**	**Cost**	**Delivery time**	**UNIT PRICE**	**Cost**			**UNIT PRICE**	**Cost**	**Delivery time**	**UNIT PRICE**	**Cost**	**Delivery time**	**UNIT PRICE**	**Cost**	**Delivery time**	**UNIT PRICE**	**Cost**	**Delivery time**
423		GATE VALVE - THREADED; KENNEDY	2"	10	no bid			$491.82	$4,918.20	stock	$469.51	$4,695.10	7-28 days	$487.46	$4,874.60	stock to 6 weeks	no bid			$503.20	$5,032.00	1 week	$464.84	$4,648.40	2 weeks	no bid			$453.19	$4,531.90	10-15 days
424		GATE VALVE; KENNEDY	3"	2	no bid			$721.30	$1,442.60	stock	$688.53	$1,377.06	7-28 days	$715.08	$1,430.16	stock to 6 weeks	no bid			$730.56	$1,461.12	1 week	$681.50	$1,363.00	2 weeks	no bid			$620.99	$1,241.98	10-15 days
425		GATE VALVE' M&H	4"	2	no bid			$806.13	$1,612.26	stock	$769.51	$1,539.02	7-28 days	$798.75	$1,597.50	stock to 6 weeks	no bid			$816.05	$1,632.10	1 week	$784.00	$1,568.00	2 weeks	no bid			$689.99	$1,379.98	10-15 days
426		GATE VALVE; M&H	6"	5	no bid			$1,028.22	$5,141.10	stock	$981.51	$4,907.55	7-28 days	$1,019.61	$5,098.05	stock to 6 weeks	no bid			$1,041.69	$5,208.45	1 week	$961.67	$4,808.35	2 weeks	no bid			$868.74	$4,343.70	10-15 days
427		TAPPING VALVE; MUELLER	6"	2	no bid			$1,409.66	$2,819.32	stock	$1,371.00	$2,742.00	7-28 days	$1,421.84	$2,843.68	stock to 6 weeks	no bid			$1,452.62	$2,905.24	1 week	$1,398.00	$2,796.00	2 weeks	no bid			$1,053.39	$2,106.78	10-15 days
428		GATE VALVE; MUELLER	8"	5	no bid			$1,637.93	$8,189.65	stock	$1,563.72	$7,818.60	7-28 days	$1,622.43	$8,112.15	stock to 6 weeks	no bid			$1,657.57	$8,287.85	1 week	$1,531.91	$7,659.55	2 weeks	no bid			$1,398.79	$6,993.95	10-15 days
429		GATE VALVE	10"	1	no bid			$2,483.10	$2,483.10	2-4 weeks	$2,438.00	$2,438.00	7-28 days	$2,529.27	$2,529.27	stock to 6 weeks	no bid			$2,610.96	$2,610.96	1 week	$2,388.74	$2,388.74	2 weeks	no bid			$2,181.39	$2,181.39	10-15 days
430		GATE VALVE; M&H	12"	1	no bid			$3,201.92	$3,201.92	2-4 weeks	$3,085.00	$3,085.00	7-28 days	$3,200.00	$3,200.00	stock to 6 weeks	no bid			$3,269.99	$3,269.99	1 week	$3,006.99	$3,006.99	2 weeks	no bid			$2,759.94	$2,759.94	10-15 days
431		GATE VALVE; MUELLER	16"	1	no bid			$8,577.86	$8,577.86	6-8 weeks	$8,422.06	$8,422.06	7-28 days	$10,343.09	$10,343.09	stock to 6 weeks	no bid			$16,618.57	$16,618.57	4-6 weeks	$8,335.00	$8,335.00	2 weeks	no bid			$9,251.91	$9,251.91	10-15 days
		Incompete section		**Totals**		$0.00			$38,386.01			$37,024.39			$40,028.50			$0.00			$47,026.28			$36,574.03			$0.00			$34,791.53	

Valve Boxes/Risers

Item Number		DESCRIPTION	SIZE	Estimated BID QTY.	United Systems & Software UNIT PRICE	Cost		G & C Supply UNIT PRICE	Cost		Core & Main UNIT PRICE	Cost		Ferguson Waterworks UNIT PRICE	Cost	Estimated Delivery time	Badger Meter UNIT PRICE	Cost		Hayes Pipe Supply UNIT PRICE	Cost	Estimated Delivery time	Southern Pipe & Supply UNIT PRICE	Cost	Estimated Delivery time	Consolidated Pipe & Supply UNIT PRICE	Cost	Estimated Delivery time	Citgo Water UNIT PRICE	Cost	Estimated Delivery time
436		SQUARE VALVE BOX CASTING & LID		15	no bid			$225.38	$3,380.70	stock	$223.53	$3,352.95	7-28 days	$215.91	$3,238.65	stock to 6 weeks	no bid			$223.35	$3,350.25	1 week	no bid			no bid			$11.45	$171.75	10-15 days
437		SQUARE STEEL VALVE BOX RISER		5	no bid			$141.60	$708.00	stock	$141.18	$705.90	7-28 days	$136.36	$681.80	stock to 6 weeks	no bid			no bid			no bid			no bid			$23.96	$119.80	10-15 days
438		CONCRETE VALVE BOX RISER	2"	15	no bid			no bid			$114.76	$1,721.40	7-28 days	$18.13	$271.95	stock to 6 weeks	no bid			$15.13	$226.95	1 week	no bid			no bid			$23.96	$359.40	10-15 days
439		CONCRETE VALVE BOX RISER	4"	15	no bid			no bid			$19.00	$285.00	7-28 days	$21.53	$322.95	stock to 6 weeks	no bid			$18.35	$275.25	1 week	no bid			no bid			$38.11	$571.65	10-15 days
440		CONCRETE VALVE BOX RISER	6"	15	no bid			$46.36	$695.40	stock	$29.00	$435.00	7-28 days	$34.96	$524.40	stock to 6 weeks	no bid			$27.35	$410.25	1 week	no bid			no bid			$54.44	$816.60	10-15 days
441		CONCRETE VALVE BOX RISER	12"	10	no bid			$59.78	$597.80	stock	$41.00	$410.00	7-28 days	$49.43	$494.30	stock to 6 weeks	no bid			$38.73	$387.30	1 week	no bid			no bid			no bid		
442		CONCRETE VALVE BOX RISER	18"	10	no bid			$73.20	$732.00	stock	$43.00	$430.00	7-28 days	$51.84	$518.40	stock to 6 weeks	no bid			$40.63	$406.30	1 week	no bid			no bid			no bid		
500		VALVE BOX EXTENSION; SIGMA	1"	25	no bid			$29.34	$733.50	stock	$19.06	$476.50	7-28 days	$21.71	$542.75	stock to 6 weeks	no bid			$17.20	$430.00	1-2 weeks	no bid			$19.05	$476.25	stock	no bid		
501		VALVE BOX EXTENSION; SIGMA	1.5"	25	no bid			$29.34	$733.50	stock	$23.30	$582.50	7-28 days	$28.29	$707.25	stock to 6 weeks	no bid			$21.02	$525.50	1-2 weeks	no bid			$23.25	$581.25	stock	no bid		
502		VALVE BOX EXTENSION; SIGMA	2"	30	no bid			$38.78	$1,163.40	stock	$23.30	$699.00	7-28 days	$33.94	$1,018.20	stock to 6 weeks	no bid			$21.02	$630.60	1-2 weeks	no bid			$23.25	$697.50	stock	no bid		
503		VALVE BOX EXTENSION; SIGMA	3"	25	no bid			$43.75	$1,093.75	stock	$31.77	$794.25	7-28 days	$33.57	$839.25	stock to 6 weeks	no bid			$28.66	$716.50	1-2 weeks	no bid			$31.75	$793.75	stock	no bid		
504		VALVE BOX EXTENSION; SIGMA	4"	25	no bid			$59.66	$1,491.50	stock	$37.06	$926.50	7-28 days	$33.86	$846.50	stock to 6 weeks	no bid			$33.43	$835.75	1-2 weeks	no bid			$37.05	$926.25	stock	no bid		
505		VALVE BOX EXTENSION; SIGMA	6"	25	no bid			$73.78	$1,844.50	stock	$52.95	$1,323.75	7-28 days	$48.34	$1,208.50	stock to 6 weeks	no bid			$47.76	$1,194.00	1-2 weeks	no bid			$52.94	$1,323.50	stock	no bid		
		HIGHLIGHTED PORTION IS ALSO ON THE GAS BID (G-232-237)																													
		Incomplete section		Totals		$0.00			$13,174.05			$12,142.75			$11,214.90			$0.00			$9,388.65			$0.00			$4,798.50			$2,039.20	

Hydrants

Item Number		DESCRIPTION	SIZE	Estimated BID QTY.	United Systems & Software UNIT PRICE	Cost		G & C Supply UNIT PRICE	Cost		Core & Main UNIT PRICE	Cost		Ferguson Waterworks UNIT PRICE	Cost	Estimated Delivery time	Badger Meter UNIT PRICE	Cost		Hayes Pipe Supply UNIT PRICE	Cost		Southern Pipe & Supply UNIT PRICE	Cost	Estimated Delivery time	Consolidated Pipe & Supply UNIT PRICE	Cost	Estimated Delivery time	Citgo Water UNIT PRICE	Cost	Estimated Delivery time
448		BLOW OFF-ABOVE GROUND; KUPFERLE	2"	8	no bid			$953.40	$7,627.20	stock	$1,117.27	$8,938.16	7-28 days	$961.29	$7,690.32	stock to 6 weeks	no bid			$928.98	$7,431.84	5-8 weeks	$940.32	$7,522.56	4 weeks	no bid			$945.83	$7,566.64	10-15 days
449		BLOW OFF-BELOW GROUND; KUPFERLE	2"	5	no bid			$948.36	$4,741.80	stock	$1,070.82	$5,354.10	7-28 days	$921.13	$4,605.65	stock to 6 weeks	no bid			$923.87	$4,619.35	5-8 weeks	$901.05	$4,505.25	4 weeks	no bid			$940.83	$4,704.15	10-15 days
450		POST HYDRANT,	3' BURY, 2" STRAIGHT INLET, 2-1/2" OUTLET	2	no bid			$1,395.20	$2,790.40	stock	$1,347.37	$2,694.74	7-28 days	no bid			no bid			$1,526.69		6-9 weeks	$1,306.00	$2,612.00	4 weeks	no bid			$1,360.83	$2,721.66	10-15 days
451		FIRE HYDRANT ASSEMBLY; M&H YELLOW	5 1/4"	6	no bid			$3,168.55	$19,011.30	4-6 weeks	$3,113.75	$18,682.50	7-28 days	no bid			no bid			no bid			$3,093.54	$18,561.24	4 weeks	no bid			$3,431.20	$20,587.20	10-15 days
452		HYDRANT TRAFFIC REPAIR KIT; MUELLER		5	no bid				$0.00		$392.23	$1,961.15	7-28 days	no bid			no bid			no bid			$212.51	$1,062.55	4 weeks	no bid			$168.30	$841.50	10-15 days
453		HYDRANT TRAFFIC REPAIR KIT; AMERICAN		1	no bid				$0.00		no bid			$488.08	$488.08	stock to 6 weeks	no bid			$650.73	$650.73	1-2 weeks	$215.57	$215.57	4 weeks	no bid			$181.33	$181.33	10-15 days
454		HYDRANT TRAFFIC REPAIR KIT; M&H		5	no bid			$330.57	$1,652.85	2 weeks	$320.41	$1,602.05	7-28 days	no bid			no bid			no bid			$207.49	$1,037.45	4 weeks	no bid			$118.85	$594.25	10-15 days
458		MUELLER EXTENSION KIT	5 1/4" X 6"	1	no bid			$429.11	$429.11	stock	$855.56	$855.56	7-28 days	no bid			no bid			no bid			$466.99	$466.99	4 weeks	no bid			no bid		10-15 days
459		MUELLER EXTENSION KIT	5 1/4" X 12"	1	no bid			$649.11	$649.11	stock	$1,007.78	$1,007.78	7-28 days	no bid			no bid			no bid			$533.75	$533.75	4 weeks	no bid			no bid		10-15 days
460		MUELLER EXTENSION KIT	5 1/4" X 18"	1	no bid			$583.11	$583.11	2 weeks	$1,141.12	$1,141.12	7-28 days	no bid			no bid			no bid			$598.39	$598.39	4 weeks	no bid			$560.48	$560.48	10-15 days
461		MUELLER EXTENSION KIT	5 1/4" X 24"	1	no bid			$517.91	$517.91	stock	$1,282.23	$1,282.23	7-28 days	no bid			no bid			no bid			$675.46	$675.46	4 weeks	no bid			$632.67	$632.67	10-15 days
462		M&H EXTENSION KIT	5 1/4" X 6"	1	no bid			$396.28	$396.28	stock	$655.50	$655.50	7-28 days	no bid			no bid			no bid			$401.81	$401.81	4 weeks	no bid			$734.53	$734.53	10-15 days
463		M&H EXTENSION KIT	5 1/4" X 12"	1	no bid			$453.77	$453.77	stock	$765.07	$765.07	7-28 days	no bid			no bid			no bid			$453.42	$453.42	4 weeks	no bid			$857.73	$857.73	10-15 days
464		M&H EXTENSION KIT	5 1/4" X 18"	1	no bid			$516.43	$516.43	stock	$868.94	$868.94	7-28 days	no bid			no bid			no bid			$519.42	$519.42	4 weeks	no bid			$973.47	$973.47	10-15 days
465		M&H EXTENSION KIT	5 1/4" X 24"	1	no bid			$574.38	$574.38	2 weeks	$943.67	$943.67	7-28 days	no bid			no bid			no bid			$579.98	$579.98	4 weeks	no bid			$545.07	$545.07	10-15 days
		Incomplete section		Totals		$0.00			$39,943.65			$46,752.57			$12,784.05			$0.00			$12,701.92			$39,745.84			$0.00			$41,500.68	

Insert Valve & Sleeves

Item Number		DESCRIPTION	SIZE	Estimated BID QTY.	United Systems & Software UNIT PRICE	Cost		G & C Supply UNIT PRICE	Cost		Core & Main UNIT PRICE	Cost		Ferguson Waterworks UNIT PRICE	Cost	Estimated Delivery time	Badger Meter UNIT PRICE	Cost		Hayes Pipe Supply UNIT PRICE	Cost		Southern Pipe & Supply UNIT PRICE	Cost	Estimated Delivery time	Consolidated Pipe & Supply UNIT PRICE	Cost	Estimated Delivery time	Citgo Water UNIT PRICE	Cost	Estimated Delivery time
480		INSERT VALVE & SLEEVE W/ INSTALLATION	6"	1	no bid			$7,300.00	$7,300.00		no bid			$9,139.78	$9,139.78	stock to 6 weeks	no bid			no bid			no bid			no bid			$114.27	$114.27	10-15 days
481		INSERT VALVE & SLEEVE W/ INSTALLATION	8"	1	no bid			$8,200.00	$8,200.00		no bid			$10,215.05	$10,215.05	stock to 6 weeks	no bid			no bid			no bid			no bid			$265.54	$265.54	10-15 days
482		INSERT VALVE & SLEEVE W/ INSTALLATION	10"	1	no bid			$14,900.00	$14,900.00		no bid			$15,161.29	$15,161.29	stock to 6 weeks	no bid			no bid			no bid			no bid			$407.50	$407.50	10-15 days
483		INSERT VALVE &SLEEVE W/ INSTALLATION	12"	1	no bid			$17,500.00	$17,500.00		no bid			$17,204.30	$17,204.30	stock to 6 weeks	no bid			no bid			no bid			no bid			no bid		10-15 days
484		INSERT VALVE & SLEEVE W/ INSTALLATION	16"	1	no bid			$35,000.00	$35,000.00		no bid			$43,548.39	$43,548.39	stock to 6 weeks	no bid			no bid			no bid			no bid			no bid		10-15 days
		Incomplete section		Totals		$0.00			$82,900.00			$0.00			$95,268.81			$0.00			$0.00			$0.00			$0.00			$787.31	

Sewer Material Bid List - FY 26-27

HIGHLIGHTED = RECOMMENDED AWARD

Reclaimed: Meter Boxes/Accessories

Item Number		DESCRIPTION	SIZE	Estimated BID QTY.	G & C Supply UNIT PRICE	Cost	Estimated Delivery time	Ferguson Waterworks UNIT PRICE	Cost	Estimated Delivery time	Hayes Pipe Supply UNIT PRICE	Cost	Estimated Delivery time	Fortiline Waterworks UNIT PRICE	Cost	Estimated Delivery time	Core & Main UNIT PRICE	Cost	Estimated Delivery time	Southern Pipe & Supply UNIT PRICE	Cost	Estimated Delivery time	Citco Water UNIT PRICE	Cost	Estimated Delivery time
51		36H CONCRETE BOX METER BOX BODY ONLY		6	no bid			no bid			$39.02	$234.12		$30.25	$181.50		no bid			no bid			$47.17	$283.02	
52		CI LID "SEWER" FOR 36H BOX	36T CI LID SEWER	6	no bid			no bid			$29.66	$177.96		$38.25	$229.50		$31.77	$190.62		no bid			$54.04	$324.24	
53		RECLAIMED WATER SQUARE VALVE BOX CASTING &		4	no bid			$264.77	$1,059.08	stock to 6 weeks	$302.21	$1,208.84		$250.55	$1,002.20		$245.89	$983.56		no bid			$158.04	$632.16	
54		SEWER SQUARE CLEANOUT CASTING & LID		6	no bid			$246.75	$1,480.50	stock to 6 weeks	$302.21	$1,813.26		$197.85	$1,187.10		$212.95	$1,277.70		no bid			$234.93	$1,409.58	
		Incomplete section		Totals		$0.00			$2,539.58			$3,434.18			$2,600.30			$2,451.88			$0.00			$2,649.00	

Manholes

Item Number		DESCRIPTION	SIZE	Estimated BID QTY.	G & C Supply UNIT PRICE	Cost	Estimated Delivery time	Ferguson Waterworks UNIT PRICE	Cost	Estimated Delivery time	Hayes Pipe Supply UNIT PRICE	Cost	Estimated Delivery time	Fortiline Waterworks UNIT PRICE	Cost	Estimated Delivery time	Core & Main UNIT PRICE	Cost	Estimated Delivery time	Southern Pipe & Supply UNIT PRICE	Cost	Estimated Delivery time	Citco Water UNIT PRICE	Cost	Estimated Delivery time
58		MANHOLE CASTING/LID; JBS WATER TIGHT W/T/BAR	26"	2	no bid			$1,075.00	$2,150.00	stock to 6 weeks	no bid			$1,040.85	$2,081.70		$1,138.83	$2,277.66		no bid			no bid		
59		MANHOLE CASTING/LID; JBS	26"	2	no bid			$451.11	$902.22	stock to 6 weeks	no bid			$436.55	$873.10		$485.89	$971.78		no bid			$624.00	$1,248.00	
61		CONCRETE MANHOLE RISER	4"	5	no bid			no bid			no bid			$80.65	$403.25		$94.12	$470.60		no bid			no bid		
62		CONCRETE MANHOLE RISER	6"	5	no bid			no bid			no bid			$80.65	$403.25		$104.71	$523.55		no bid			no bid		
63		CONCRETE MANHOLE RISER	12"	5	no bid			no bid			no bid			no bid			no bid			no bid			no bid		
64		MANHOLE RISER RING SOLID-CAST IRON	23" X 1.5"	5	no bid			no bid			no bid			$223.65	$1,118.25		$244.71	$1,223.55		no bid			$113.70	$568.50	
65		MANHOLE RISER RING SOLID-CAST IRON	26" X 1.5"	5	no bid			no bid			no bid			$129.05	$645.25		$244.71	$1,223.55		no bid			no bid		
		Incomplete section		Totals		$0.00			$3,052.22			$0.00			$5,524.80			$6,690.69			$0.00			$1,816.50	

Pipe

Item Number		DESCRIPTION	SIZE	Estimated BID QTY.	G & C Supply UNIT PRICE	Cost	Estimated Delivery time	Ferguson Waterworks UNIT PRICE	Cost	Estimated Delivery time	Hayes Pipe Supply UNIT PRICE	Cost	Estimated Delivery time	Fortiline Waterworks UNIT PRICE	Cost	Estimated Delivery time	Core & Main UNIT PRICE	Cost	Estimated Delivery time	Southern Pipe & Supply UNIT PRICE	Cost	Estimated Delivery time	Citco Water UNIT PRICE	Cost	Estimated Delivery time
71		CTS ROLL REUSE PIPE (500' ROLLS) (PURPLE)	1"	500	no bid			no bid			no bid			$1.75	$875.00		no bid			no bid			no bid		
72		CTS ROLL REUSE PIPE (500' ROLLS) (PURPLE)	2"	500	no bid			no bid			no bid			$10.75	$5,375.00		$10.66	$5,330.00		no bid			no bid		
73		SEWER PIPE SCH 40	4"	200	no bid			$2.40	$480.00	stock to 6 weeks	$3.75	$750.00		no bid			$3.45	$690.00		no bid			no bid		
74		C-900 REUSE WATER PIPE	4"	50	no bid			no bid			$6.61	$330.50		no bid			$6.33	$316.50		no bid			no bid		
75		C-900 PURPLE PIPE	6"	40	no bid			no bid			$13.14	$525.60		no bid			$12.73	$509.20		no bid			no bid		
77		SDR 21 SEWER PIPE	6"	100	no bid			$8.65	$865.00	stock to 6 weeks	$7.78	$778.00		no bid			$8.00	$800.00		no bid			no bid		
78		SDR 26 SEWER PIPE	6"	100	no bid			$5.93	$593.00	stock to 6 weeks	$5.94	$594.00		no bid			$6.11	$611.00		no bid			no bid		
80		CL 350 DUCTILE IRON SEWER PIPE W/ PROTECTO 401 LINING OR APPROVED EQUAL	8"	50	no bid			$70.00	$3,500.00	stock to 6 weeks	$67.66	$3,383.00		no bid			$64.78	$3,239.00		no bid			no bid		
81		C900 REUSE WATER PIPE	8"	40	no bid			no bid			$22.62	$904.80		no bid			$21.91	$876.40		no bid			no bid		
82		SDR 21 SEWER PIPE	8"	100	no bid			$12.18	$1,218.00	stock to 6 weeks	$13.07	$1,307.00		no bid			$13.45	$1,345.00		no bid			no bid		
83		SDR 26 SEWER PIPE	8"	100	no bid			$10.69	$1,069.00	stock to 6 weeks	$10.75	$1,075.00		no bid			$11.06	$1,106.00		no bid			no bid		
84		SDR 35 SEWER PIPE	8"	20	no bid			$8.29	$165.80	stock to 6 weeks	$8.10	$162.00		no bid			$8.35	$167.00		no bid			no bid		
85		SDR 35 SEWER PIPE	10"	20	no bid			$12.41	$248.20	stock to 6 weeks	$12.62	$252.40		no bid			$12.98	$259.60		no bid			no bid		
86		C900 REUSE WATER PIPE	12"	20	no bid			no bid			$48.16	$963.20		no bid			$47.20	$944.00		no bid			no bid		
87		SDR 26 SEWER PIPE	12"	100	no bid			$24.29	$2,429.00	stock to 6 weeks	$20.04	$2,004.00		no bid			$27.62	$2,762.00		no bid			no bid		
88		SDR11 IPS HDPE PIPE (RE-USE)	6"	20	no bid			no bid			no bid			no bid			no bid			no bid			no bid		
89		SDR11 IPS HDPE PIPE (RE-USE)	8"	20	no bid			no bid			no bid			no bid			no bid			no bid			no bid		
92		SDR 26 SEWER PIPE	15"	20	no bid			no bid			$36.16	$723.20		no bid			$37.20	$744.00		no bid			no bid		
93		CL 350 DUCTILE IRON SEWER PIPE W/ PROTECTO 401 LINING OR APPROVED EQUAL	20"	20	no bid			$197.51	$3,950.20	stock to 6 weeks	no bid			no bid			$185.66	$3,713.20		no bid			no bid		
		Incomplete section		Totals		$0.00			$14,518.20			$13,752.70			$6,250.00			$23,412.90			$0.00			$0.00	

Repair Clamps

Item Number		DESCRIPTION	SIZE	Estimated BID QTY.	G & C Supply UNIT PRICE	Cost	Estimated Delivery time	Ferguson Waterworks UNIT PRICE	Cost	Estimated Delivery time	Hayes Pipe Supply UNIT PRICE	Cost	Estimated Delivery time	Fortiline Waterworks UNIT PRICE	Cost	Estimated Delivery time	Core & Main UNIT PRICE	Cost	Estimated Delivery time	Southern Pipe & Supply UNIT PRICE	Cost	Estimated Delivery time	Citco Water UNIT PRICE	Cost	Estimated Delivery time
96		SEWER REPAIR CLAMP;JCM	8" x 12" LONG (8.20-8.60)	2	no bid			no bid			no bid			$201.10	$402.20		no bid			no bid			$305.23	$610.46	
97		SEWER REPAIR CLAMP; ROMAC	12" (12.10 - 12.50)	2	no bid			no bid			no bid			$269.15	$538.30		no bid			no bid			no bid		
		Incomplete section		Totals		$0.00			$0.00			$0.00			$940.50			$0.00			$0.00			$610.46	

Tapping Saddles

Item Number		DESCRIPTION	SIZE	Estimated BID QTY.	G & C Supply UNIT PRICE	Cost	Estimated Delivery time	Ferguson Waterworks UNIT PRICE	Cost	Estimated Delivery time	Hayes Pipe Supply UNIT PRICE	Cost	Estimated Delivery time	Fortiline Waterworks UNIT PRICE	Cost	Estimated Delivery time	Core & Main UNIT PRICE	Cost	Estimated Delivery time	Southern Pipe & Supply UNIT PRICE	Cost	Estimated Delivery time	Citco Water UNIT PRICE	Cost	Estimated Delivery time
102		ROMAC SEWER TAPPING SADDLE	(8.00-14.40)	2	$229.08	$458.16	stock	$209.43	$418.86	stock to 6 weeks	$177.16	$354.32		$193.90	$387.80		$225.72	$451.44		no bid			no bid		

				Totals		$458.16			$418.86			$354.32			$387.80			$451.44			$0.00			$0.00	
Fittings																								
Item				Estimated	G & C Supply		Estimated	Ferguson Waterworks		Estimated	Hayes Pipe Supply		Estimated	Fortiline Waterworks		Estimated	Core & Main		Estimated	Southern Pipe & Supply		Estimated	Citco Water		Estimated
Number		DESCRIPTION	SIZE	BID QTY.	UNIT PRICE	Cost	Delivery time	UNIT PRICE	Cost	Delivery time	UNIT PRICE	Cost	Delivery time	UNIT PRICE	Cost	Delivery time	UNIT PRICE	Cost	Delivery time	UNIT PRICE	Cost	Delivery time	UNIT PRICE	Cost	Delivery time
110		BRASS CLEAN-OUT CAP; MATCO-NORCA	4"	15	$13.21	$198.15	stock	$9.43	$141.45	stock to 6 weeks	$10.38	$155.70		no bid			$17.43	$261.45		no bid			$19.70	$295.50	
111		PLASTIC CLEAN-OUT CAP	4"	10	$4.59	$45.90	stock	$11.97	$119.70	stock to 6 weeks	no bid			$14.59	$145.90		$4.32	$43.20		no bid			no bid		
112		GLUE FEMALE ADAPTOR; MULTI FITTINGS	4"	15	$9.10	$136.50	stock	$14.71	$220.65	stock to 6 weeks	$11.97	$179.55		$11.05	$165.75		$9.46	$141.90		no bid			$10.37	$155.55	
114		GLUE LONG SWEEP TEE WYE; CHARLOTTE	4"	10	$35.09	$350.90	stock	$23.61	$236.10	stock to 6 weeks	no bid			$35.19	$351.90		$30.19	$301.90		no bid			no bid		
115		GLUE 45° FEMALE COUPLING; LASCO	4"	5	$12.90	$64.50	stock	$15.18	$75.90	stock to 6 weeks	no bid			$9.95	$49.75		$8.54	$42.70		no bid			no bid		
116		GLUE COUPLING; GPK	4"	10	$7.37	$73.70	stock	$7.40	$74.00	stock to 6 weeks	$7.28	$72.80		$6.70	$67.00		$5.76	$57.60		no bid			no bid		
117		GLUE 22° FEMALE COUPLING; LASCO	4"	5	$11.61	$58.05	stock	$10.96	$54.80	stock to 6 weeks	no bid			$15.55	$77.75		$13.35	$66.75		no bid			no bid		
119		QUICK CAP	6"	2	$5.80	$11.60	stock	$10.07	$20.14	stock to 6 weeks	$4.50	$9.00		$9.15	$18.30		$5.32	$10.64		no bid			no bid		
120		GLUE FEMALE ADAPTOR	6"	15	$30.50	$457.50	stock	$38.00	$570.00	stock to 6 weeks	no bid			$34.85	$522.75		$33.54	$503.10		no bid			no bid		
122		BRASS CLEAN-OUT CAP; MATCO-NORCA	6"	20	$33.10	$662.00	stock	$12.18	$243.60	stock to 6 weeks	$25.99	$519.80		$18.45	$369.00		$36.82	$736.40		no bid			no bid		
123		PLASTIC CLEAN-OUT CAP	6"	2	$14.91	$29.82	stock	$22.93	$45.86	stock to 6 weeks	$31.39	$62.78		$28.95	$57.90		$21.70	$43.40		no bid			no bid		
124		GLUE COUPLING; GPK	6"	6	$24.33	$145.98	stock	$13.80	$82.80	stock to 6 weeks	$29.97	$179.82		$27.60	$165.60		$13.05	$78.30		no bid			no bid		
125		GLUE 45° WYE; MULTI FITTINGS	6"	15	$83.38	$1,250.70	stock	$44.20	$663.00	stock to 6 weeks	no bid			$77.80	$1,167.00		$41.81	$627.15		no bid			no bid		
126		GLUE 22° FEMALE COUPLING; MULTI FITTINGS	6"	5	$72.29	$361.45	stock	$43.15	$215.75	stock to 6 weeks	no bid			$71.95	$359.75		$25.97	$129.85		no bid			no bid		
127		GLUE 22° MALE/FEMALE COUPLING; GPK	6"	5	no bid			$43.15	$215.75	stock to 6 weeks	no bid			$69.70	$348.50		$30.27	$151.35		no bid			no bid		
128		GLUE 45° MALE/FEMALE COUPLING; MULTI FITTINGS	6"	10	no bid			$40.04	$400.40	stock to 6 weeks	no bid			$46.00	$460.00		$27.19	$271.90		no bid			no bid		
129		GLUE 45 DEGREE/FEMALE COUPLING; MULTI FITTINGS	6"	5	$53.43	$267.15	stock	$22.49	$112.45	stock to 6 weeks	no bid			$46.00	$230.00		$21.27	$106.35		no bid			no bid		
130		SPIGOT x HUB SDR 35 x SCH 40	6" X 4"	5	$30.39	$151.95	stock	$31.61	$158.05	stock to 6 weeks	no bid			$29.95	$149.75		$29.91	$149.55		no bid			no bid		
		Incomplete section		Totals		$4,265.85			$3,650.40			$1,179.45			$4,706.60			$3,723.49			$0.00			$451.05	
Gasket Couplings																								
Item				Estimated	G & C Supply		Estimated	Ferguson Waterworks		Estimated	Hayes Pipe Supply		Estimated	Fortiline Waterworks		Estimated	Core & Main		Estimated	Southern Pipe & Supply		Estimated	Citco Water		Estimated
Number		DESCRIPTION	SIZE	BID QTY.	UNIT PRICE	Cost	Delivery time	UNIT PRICE	Cost	Delivery time	UNIT PRICE	Cost	Delivery time	UNIT PRICE	Cost	Delivery time	UNIT PRICE	Cost	Delivery time	UNIT PRICE	Cost	Delivery time	UNIT PRICE	Cost	Delivery time
135		GASKET COUPLING; MULTI FITTINGS	6"	2	$38.54	$77.08	stock	$38.63	$77.26	stock to 6 weeks	$52.26	$104.52		$35.75	$71.50		$36.54	$73.08		no bid			no bid		
136		GASKET 22° COUPLING; HARCO	6"	2	$31.74	$63.48	stock	$30.83	$61.66	stock to 6 weeks	$59.58	$119.16		$28.55	$57.10		$29.15	$58.30		no bid			no bid		
137		GASKET 45° COUPLING; HARCO	6"	2	$32.75	$65.50	stock	$31.77	$63.54	stock to 6 weeks	$43.71	$87.42		$29.45	$58.90		$30.05	$60.10		no bid			no bid		
138		GASKET 45° MALE/FEMALE; MULTI FITTINGS	6"	2	$30.63	$61.26	stock	$27.32	$54.64	stock to 6 weeks	no bid			$26.05	$52.10		$26.63	$53.26		no bid			no bid		
139		GASKET COUPLING; GPK	8"	2	$67.08	$134.16	stock	$65.57	$131.14	stock to 6 weeks	$86.34	$172.68		$60.75	$121.50		$62.02	$124.04		no bid			no bid		
142		WYE GASKET	8" X 6"	2	$94.79	$189.58	stock	$97.36	$194.72	stock to 6 weeks	$113.67	$227.34		$90.19	$180.38		$97.61	$195.22		no bid			no bid		
144		GASKET COUPLING; GPK	10"	2	$154.44	$308.88	stock	$145.53	$291.06	stock to 6 weeks	no bid			$134.80	$269.60		$137.63	$275.26		no bid			no bid		
145		GASKET COUPLING; GPK	12"	2	no bid			$198.73	$397.46	stock to 6 weeks	no bid			$195.89	$391.78		$199.96	$399.92		no bid			no bid		
147		GASKET COUPLING; IPEX	15"	2	no bid			$411.24	$822.48	stock to 6 weeks	no bid			$405.25	$810.50		$413.76	$827.52		no bid			no bid		
		Incomplete section		Totals		$899.94			$2,093.96			$711.12			$2,013.36			$2,066.70			$0.00			$0.00	
Ferncos																								
Item				Estimated	G & C Supply		Estimated	Ferguson Waterworks		Estimated	Hayes Pipe Supply		Estimated	Fortiline Waterworks		Estimated	Core & Main		Estimated	Southern Pipe & Supply		Estimated	Citco Water		Estimated
Number		DESCRIPTION	SIZE	BID QTY.	UNIT PRICE	Cost	Delivery time	UNIT PRICE	Cost	Delivery time	UNIT PRICE	Cost	Delivery time	UNIT PRICE	Cost	Delivery time	UNIT PRICE	Cost	Delivery time	UNIT PRICE	Cost	Delivery time	UNIT PRICE	Cost	Delivery time
152		COUPLING; FERNCO	4" CI/PVC X 4" CI/PVC	15	$4.68	$70.20	stock	$6.80	$102.00	stock to 6 weeks	$5.72	$85.80		$5.05	$75.75		$6.24	$93.60		$5.20	$78.00		$23.49	$352.35	
153		COUPLING; FERNCO	4" CONC X 4" CI/PVC	6	$5.05	$30.30	stock	$6.80	$40.80	stock to 6 weeks	$6.18	$37.08		$5.45	$32.70		$6.74	$40.44		$5.60	$33.60		$6.27	$37.62	
154		COUPLING; FERNCO	4" CLAY X 4" PVC	6	$4.68	$28.08	stock	$6.80	$40.80	stock to 6 weeks	$5.72	$34.32		$5.05	$30.30		$6.24	$37.44		$5.20	$31.20		$34.43	$206.58	
155		COUPLING; FERNCO	6" CLAY X 4" PVC	6	$11.73	$70.38	stock	$15.81	$94.86	stock to 6 weeks	$14.38	$86.28		no bid			$15.64	$93.84		$13.02	$78.12		$52.08	$312.48	
156		COUPLING; FERNCO	6" CI/PVC X 4" CI/PVC	6	$11.73	$70.38	stock	$15.81	$94.86	stock to 6 weeks	$14.38	$86.28		$12.65	$75.90		$15.64	$93.84		$13.02	$78.12		$57.87	$347.22	
157		COUPLING; FERNCO	6" CONC X 6" CI/PVC	6	$11.06	$66.36	stock	$14.90	$89.40	stock to 6 weeks	$13.54	$81.24		$11.89	$71.34		$14.75	$88.50		$12.28	$73.68		$68.25	$409.50	
158		COUPLING; FERNCO	6" CLAY X 6" PVC	6	$9.99	$59.94	stock	$14.90	$89.40	stock to 6 weeks	$12.25	$73.50		$10.75	$64.50		$13.32	$79.92		$11.11	$66.66		$58.39	$350.34	
159		COUPLING;FERNCO	6" CLAY X 6' CLAY	6	$10.79	$64.74	stock	$14.90	$89.40	stock to 6 weeks	$13.23	$79.38		$11.60	$69.60		$14.39	$86.34		$11.97	$71.82		$44.74	$268.44	
160		COUPLING; FERNCO	6" CI/PVC X 6" CI/PVC	8	$9.99	$79.92	stock	$14.90	$119.20	stock to 6 weeks	$12.25	$98.00		$10.75	$86.00		$13.32	$106.56		$11.10	$88.80		$12.41	$99.28	
161		COUPLING; FERNCO	6" AC OR DI X 6" CI OR PVC	2	$10.79	$21.58	stock	$14.90	$29.80	stock to 6 weeks	$13.23	$26.46		$11.60	$23.20		$14.39	$28.78		$11.95	$23.90		$13.40	$26.80	
162		COUPLING; FERNCO	8" CI/PVC X 8" CI/PVC	2	$18.57	$37.14	stock	$27.00	$54.00	stock to 6 weeks	$22.75	$45.50		$19.99	$39.98		$24.76	$49.52		$20.63	$41.26		$101.74	$203.48	
163		COUPLING; FERNCO	8" CI X 8" CI	2	$77.65	$155.30	stock	$106.55	$213.10	stock to 6 weeks	$18.84	$37.68		no bid			$103.54	$207.08		$86.27	$172.54		$66.42	$132.84	
164		COUPLING; FERNCO	8" CONC X 8" CI/PVC	2	$74.82	$149.64	stock	$106.55	$213.10	stock to 6 weeks	$20.35	$40.70		no bid			$99.76	$199.52		$83.13	$166.26		$86.77	$173.54	
165		COUPLING; FERNCO	8" CLAY X 8" PVC	2	$15.38	$30.76	stock	$25.00	$50.00	stock to 6 weeks	$18.84	$37.68		$16.55	$33.10		$20.51	$41.02		$17.08	$34.16		$66.41	$132.82	
166		COUPLING; FERNCO	10" CI/PVC X 10" CI/PVC	2	$23.09	$46.18	stock	$37.00	$74.00	stock to 6 weeks	$28.29	$56.58		$24.85	$49.70		$30.79	$61.58		$25.09	$50.18		$86.40	$172.80	
167		COUPLING; FERNCO	10" CLAY X 10" CI/PVC	2	$52.42	$104.84	stock	$25.00	$50.00	stock to 6 weeks	$28.89	$57.78		no bid			$69.90	$139.80		$58.24	$116.48		no bid		
168		COUPLING; FERNCO	10" CONC X 10" CI/PVC	2	$23.65	$47.30	2-4 weeks	$37.00	$74.00	stock to 6 weeks	$28.89	$57.78		no bid			$31.54	$63.08		$25.65	$51.30		no bid		
169		COUPLING; FERNCO	12" CI/PVC X 12" CI/PVC	2	$26.94	$53.88	stock	$38.00	$76.00	stock to 6 weeks	$33.02	$66.04		$28.99	$57.98		$35.92	$71.84		$29.93	$59.86		$105.77	$211.54	
170		COUPLING; FERNCO	12" CLAY X 12" CI/PVC	2	$26.94	$53.88	stock	$38.00	$76.00	stock to 6 weeks	$33.02	$66.04		$28.99	$57.98		$35.92	$71.84		$29.93	$59.86		$105.77	$211.54	
171		COUPLING; FERNCO	12" CONC X 12" PVC	2	$26.94	$53.88	stock	$38.00	$76.00	stock to 6 weeks	$33.02	$66.04		$28.99	$57.98		$35.92	$71.84		$29.92	$59.84		$149.32	$298.64	
172		COUPLING; FERNCO	15" CLAY X 15" PVC	2	$42.36	$84.72	stock	$60.00	$120.00	stock to 6 weeks	$151.14	$302.28		$45.55	$91.10		$56.48	$112.96		$47.06	$94.12		$199.70	$399.40	
		Incomplete section		Totals		$1,379.40			$1,866.72			$1,522.44			$917.11			$1,839.34			$1,529.76			$4,347.21	

LEGAL NOTICE

INVITATION TO SUBMIT QUOTATIONS

The Town of Smyrna will accept quotations on the annual Gas, Water and Sewer materials for the Utilities Department. Bidders shall submit sealed quotations in the format specified in the Invitation to Submit Quotations no later than **2:00 p.m. May 19, 2026** at which time the bids will be publicly opened and read aloud. No bid may be withdrawn after the scheduled closing time for a period of 90 days. Bidding documents may be obtained at Smyrna Town Hall during regular business hours or www.townofsmyrna.org. Quotations should be mailed or hand delivered to:

Purchasing Department
Smyrna Town Hall
Sealed Bid on Annual Gas, Water & Sewer Materials
May 19 @ 2:00 p.m.
315 South Lowry Street
Smyrna, TN 37167

The Town of Smyrna will not discriminate in the purchase of all goods and services on the basis of race, color, religion, sex, national origin, age, disability or any other lawfully protected classification.

Verbal quotations, faxed quotations or quotations received after the closing date will not be accepted. The Town of Smyrna reserves the right to reject any and all bids, to waive technicalities or informalities and to accept any bid deemed to be in the best interest of the Town.

BY: Sierra Lowry
Finance Director

TO BE RUN: May 5, 2026

Citco Water

COMPANY NAME

TABLE OF CONTENTS

		PAGE
SECTION I -	GENERAL INFORMATION	3
SECTION II -	SPECIFICATIONS AND PRICE QUOTATION	5
	INSURANCE REQUIREMENTS	6
	AGREEMENT	10
SECTION III –	SPECIFICATION COMPLIANCE	16
	ATTACHMENT A	17

SPREADSHEETS & DRAWINGS

SECTION I – GENERAL INFORMATION

A. The Town of Smyrna desires to purchase annual gas, water and sewer materials for the Utilities Department for the fiscal year July 1, 2026 through June 30, 2027.

Location of Smyrna Town Hall:
315 South Lowry Street
Smyrna, TN 37167

Delivery Locations:
Gas: 108 G Street, Smyrna
Water & Sewer: 106 G Street, Smyrna
Call for delivery appointment.

B. Questions should be directed to Kevin Scott 615-479-4895. Email address: kevin.scott@townofsmyrna.org.

C. The Town of Smyrna reserves the right to reject any and all bids, to waive technicalities or informalities and to accept any bid deemed to be in the best interest of the Town. No bid may be withdrawn after the scheduled closing time for a period of 90 days.

D. The bidder shall abide by and comply with the true intent of the specifications and not take advantage of any unintentional error or omission, but shall fully address the full intent and meaning of each aspect of the specifications.

E. **Equals must be pre-approved by Kevin Scott prior to bid opening. All items to be ordered as needed**. Quantities are **estimated** on annual usage.

F. All materials in the bid documents have been placed into specific categories within each department. Each category shall be considered as a whole and not broken apart (See example in Attachment A).

G. Section II, III and contract Agreement shall be **completed** and **included** as an integral part of each bidder's proposal. Successful bidder will be expected to enter into a contract Agreement with the Town. Agreement shall be signed, but not dated, by the proper business representative and submitted **with** the bid proposal. An executed contract will be forwarded to winning vendor after Council approval.

H. Freight shall be paid by vendor and should be included in unit price bid.

I. The Town is a tax-exempt organization.

J. Mail is delivered after 11:00 a.m. Monday through Friday.

K. Bid quotations **must** be submitted on the Town's quotation page(s). No exceptions.

L. THIS ORDER WILL EXPIRE JUNE 30, 2027.

M. By submission of this bid, each bidder/proposer and each person signing on behalf of any bidder certifies, and in the case of a joint bid each party thereto certifies as to its own organization, under penalty of perjury, that to the best of its knowledge and belief that each bidder is not on the list created pursuant to T.C.A. § 12-12-106 Iran

Divestment Act. For reference purposes, the list is currently available online at: State of TN_Debarred_Vendors.pdf

SECTION II – SPECIFICATIONS AND PRICE QUOTATION

Base Bid Schedule

See Attached Spreadsheets

All materials have been placed into specific categories within each department. Each category shall be considered as a whole and not broken apart. An example of the format is included in Attachment A.

The Town of Smyrna has included a spreadsheet with this document. The spreadsheet has been included for bidding convenience. Each bidder is responsible for the information and mathematical accuracy. Please check and double check your bid prior to submitting.

ESTIMATED DELIVERY TIME MUST BE INCLUDED FOR ITEMS.

Compliance with laws:

The contractor must comply with all applicable federal and state law including the prevailing wage laws.

Contractor must provide adequate proof of insurance with the bid.

INSURANCE REQUIREMENTS

The Vendor shall purchase and maintain for the duration of the contract insurance against claims for injuries to persons or damages to property which may arise from or in connection with the performance of the work hereunder by the Vendor, its agents, representatives, employees or subcontractors.

A. MINIMUM SCOPE AND LIMITS OF INSURANCE

1. **Workers Compensation**
   Workers Compensation insurance shall be in compliance with the State of Tennessee and shall be statutory. Employers Liability shall be included with a minimum limit of $500,000 per accident/per disease/per employee.

2. **Commercial General Liability**
   Commercial General Liability insurance shall have a minimum limit per occurrence of $1,000,000 and a minimum general aggregate of $2,000,000. It shall include completed operations, product liability and personal injury liability insurance.

3. **Automobile Liability**
   Automobile Liability Insurance shall have a minimum combined single limit per occurrence of $1,000,000. This insurance shall include third-party bodily injury and property damage liability for owned, hired, borrowed and non-owned automobiles.

B. DEDUCTIBLES AND SELF-INSURED RETENTIONS

Any deductibles or self-insured retentions must be declared to the Town of Smyrna. The Vendor shall be responsible for all deductibles and self-insured retentions.

C. OTHER INSURANCE PROVISIONS

The policies are to contain, or be endorsed to contain, the following provisions:

1. General Liability and Automobile Liability Coverages
   a. The Town, its elected and appointed officials, agents, employees and volunteers shall be named as an additional insured as regards negligence by the vendor.

   b. The Vendor's insurance shall be primary as respects the Town, its elected and appointed officials, agents, employees and volunteers. Any insurance or

self-insurance maintained by the Town of Smyrna shall be excess and non-contributory of the Vendor's insurance.

2. Workers Compensation and Employers Liability Coverage

   The insurer shall agree to waive all rights of subrogation against the Town, its elected and appointed officials, agents, employees and volunteers for losses arising from work performed by the Vendor for the Town of Smyrna.

3. All Coverages

   a. Coverage shall not be canceled, suspended, or voided by either party (the Vendor or the insurer) or reduced in coverage or in limits except after 30 days written notice has been given to the Town of Smyrna. Ten-day written notice of cancellation is acceptable for non-payment of premium. Notifications shall comply with the standard cancellation provisions in the Vendor's policy.

   b. Neither the acceptance of the completed work nor the payment thereof shall release the Vendor from the obligations of the insurance requirements or indemnification agreement.

   c. The insurance companies issuing the policies shall have no recourse against the Town of Smyrna for payment of premiums or for assessments under any form of the policies.

   d. Replacement certificates, policies or endorsements shall be provided to the Town for any such insurance expiring prior to the completion of services.

   e. Any failure of the Vendor to comply with reporting provisions of the policy shall not affect coverage provided to the Town, its elected and appointed officials, agents, employees and volunteers.

D. ACCEPTABILITY OF INSURERS

All required insurance shall be provided by a company or companies licensed to conduct business in the State of Tennessee. Insurance shall be underwritten by insurers with an A.M. Best Company ratings no less than an A.

E. VERIFICATION OF COVERAGE

The Vendor shall furnish the Town with Certificates of Insurance reflecting proof of required coverage. The Certificates for each insurance policy are to be signed by a person authorized by that insurer to bind coverage on its behalf. **The Certificates are to be received and approved by the Town before work commences and upon any contract renewal thereafter.**

Upon failure of the Vendor to furnish, deliver and maintain such insurance as requested, this contract, at the election of the Town, may be suspended, discontinued or terminated. Failure of the Vendor to purchase and/or maintain any required insurance shall not relieve the Vendor from any liability or indemnification under the contract.

The Certificate of Insurance naming the "Town of Smyrna" as **Additional Insured** shall be addressed to the attention of:

Town of Smyrna
Department of Safety & Risk Management
ATTN: Henry Urbina
315 S Lowry St
Smyrna, TN 37167

It can also be submitted electronically to henry.urbina@townofsmyrna.org. The subject line has to indicate the name of the project.

The Town reserves the right to request complete certified copies of all required insurance policies at any time.

F. SUBCONTRACTORS

Vendor shall include all subcontractors as insureds under its policies **OR** shall be responsible for verifying and maintaining the Certificates provided by each subcontractor. Subcontractors shall be subject to all of the requirements stated herein. The Town of Smyrna reserves the right to request copies of subcontractor's Certificates at any time.

G. WORKERS' COMPENSATION INDEMNITY

In the event Vendor is not required to provide or is exempt from providing workers' compensation coverage, the parties hereby agree that Vendor, its owners, agents and employees will have no cause of action against, and will not assert a claim against the Town of Smyrna, its elected and appointed officials, agents, employees and volunteers, under any circumstances. The parties also hereby agree that the Town of Smyrna, its elected and appointed officials, agents, employees and volunteers shall in no circumstance be, or considered as, the employer or statutory employer of Vendor, its owners, agents and employees. The parties further agree that Vendor is a wholly independent vendor and is exclusively responsible for its employees, owners, and agents. Vendor hereby agrees to protect, defend, indemnify and hold the Town of Smyrna, its elected and appointed officials, agents, employees and volunteers harmless from any such assertion or claim that may arise from the performance of this contract.

HOLD HARMLESS AND INDEMNITY REQUIREMENT:

Vendor shall indemnify and hold harmless, to the maximum extent permitted by law, the Town of Smyrna and its officers, agents, employees, volunteers, from and against any and all liability, damages, losses, (whether in contract or in tort, including personal injury, accidental death or property damage, and regardless, of whether the allegations are false, fraudulent or groundless), and costs (including reasonable attorney's fees, litigation, arbitration, mediation, appeal expenses) which in whole or in part are caused by the negligence, recklessness or intentional wrongful misconduct of the Vendor and

persons employed by or utilized by the Vendor in Vendor's performance of this Agreement.

The vendor further agrees to protect, defend, and save the Town, its elected and appointed officials, agents, employees and volunteers while working in the scope of their duties as such, harmless from and against all claims, demands, and causes of action of any kind of character, including the cost of their defense, arising in favor of the vendor's employees or third parties on account of bodily or personal injuries, death or damage to property arising out of services performed or omissions of services or in any way resulting from the acts of omissions of the vendor and/or its agents, employees, subcontractors, representative of the Town under this agreement.

Pursuant to Tennessee Attorney General Opinion 93-01, the Town will not indemnify, defend or hold harmless in any fashion the Vendor from any claims arising from any failure, regardless of any language in any attachment or other document that the Vendor may provide.

APPLICABLE LAW:

Any contract resulting from this ISQ shall be governed by and construed under the laws of the State of Tennessee.

CERTIFICATE OF LIABILITY INSURANCE

DATE (MM/DD/YYYY): 5/15/2026

THIS CERTIFICATE IS ISSUED AS A MATTER OF INFORMATION ONLY AND CONFERS NO RIGHTS UPON THE CERTIFICATE HOLDER. THIS CERTIFICATE DOES NOT AFFIRMATIVELY OR NEGATIVELY AMEND, EXTEND OR ALTER THE COVERAGE AFFORDED BY THE POLICIES BELOW. THIS CERTIFICATE OF INSURANCE DOES NOT CONSTITUTE A CONTRACT BETWEEN THE ISSUING INSURER(S), AUTHORIZED REPRESENTATIVE OR PRODUCER, AND THE CERTIFICATE HOLDER.

IMPORTANT: If the certificate holder is an ADDITIONAL INSURED, the policy(ies) must have ADDITIONAL INSURED provisions or be endorsed. If SUBROGATION IS WAIVED, subject to the terms and conditions of the policy, certain policies may require an endorsement. A statement on this certificate does not confer rights to the certificate holder in lieu of such endorsement(s).

PRODUCER Marsh & McLennan Agency LLC company - St. Louis 825 Maryville Centre Dr. Suite 200 Chesterfield MO 63017	**CONTACT NAME:** Debbie Esposito **PHONE (A/C, No, Ext):** 314-594-2565 **FAX (A/C, No):** 888-307-1561 **E-MAIL ADDRESS:** debbie.esposito@marshmma.com
INSURED WATESOL-03 CITCO Water 740 Enterprise Drive Lexington KY 40510	**INSURER(S) AFFORDING COVERAGE** / **NAIC #** **INSURER A :** National Union Fire Ins Co PittsburghPA / 19445 **INSURER B :** Travelers Property Casualty Co. of Amer / 36161 **INSURER C :** **INSURER D :** **INSURER E :** **INSURER F :**

COVERAGES **CERTIFICATE NUMBER:** 1214601685 **REVISION NUMBER:**

THIS IS TO CERTIFY THAT THE POLICIES OF INSURANCE LISTED BELOW HAVE BEEN ISSUED TO THE INSURED NAMED ABOVE FOR THE POLICY PERIOD INDICATED. NOTWITHSTANDING ANY REQUIREMENT, TERM OR CONDITION OF ANY CONTRACT OR OTHER DOCUMENT WITH RESPECT TO WHICH THIS CERTIFICATE MAY BE ISSUED OR MAY PERTAIN, THE INSURANCE AFFORDED BY THE POLICIES DESCRIBED HEREIN IS SUBJECT TO ALL THE TERMS, EXCLUSIONS AND CONDITIONS OF SUCH POLICIES. LIMITS SHOWN MAY HAVE BEEN REDUCED BY PAID CLAIMS.

INSR LTR	TYPE OF INSURANCE	ADDL INSD	SUBR WVD	POLICY NUMBER	POLICY EFF (MM/DD/YYYY)	POLICY EXP (MM/DD/YYYY)	LIMITS	
A	X **COMMERCIAL GENERAL LIABILITY** CLAIMS-MADE X OCCUR GEN'L AGGREGATE LIMIT APPLIES PER: POLICY X PRO-JECT X LOC OTHER:			9566274	6/1/2025	6/1/2026	EACH OCCURRENCE DAMAGE TO RENTED PREMISES (Ea occurrence) MED EXP (Any one person) PERSONAL & ADV INJURY GENERAL AGGREGATE PRODUCTS - COMP/OP AGG $	$ 2,000,000 $ 500,000 $ 25,000 $ 2,000,000 $ 4,000,000 $ 4,000,000 $
A	**AUTOMOBILE LIABILITY** X ANY AUTO OWNED AUTOS ONLY / SCHEDULED AUTOS X HIRED AUTOS ONLY / X NON-OWNED AUTOS ONLY			5717780	6/1/2025	6/1/2026	COMBINED SINGLE LIMIT (Ea accident) BODILY INJURY (Per person) BODILY INJURY (Per accident) PROPERTY DAMAGE (Per accident) $	$ 2,000,000 $ $ $ $
B	X **UMBRELLA LIAB** X OCCUR **EXCESS LIAB** CLAIMS-MADE DED RETENTION $			CUP7W859223	6/1/2025	6/1/2026	EACH OCCURRENCE AGGREGATE $	$ 5,000,000 $ 5,000,000 $
A	**WORKERS COMPENSATION AND EMPLOYERS' LIABILITY** Y/N ANYPROPRIETOR/PARTNER/EXECUTIVE OFFICER/MEMBER EXCLUDED? N **(Mandatory in NH)** If yes, describe under DESCRIPTION OF OPERATIONS below	N/A		17169554	6/1/2025	6/1/2026	X PER STATUTE / OTH-ER E.L. EACH ACCIDENT E.L. DISEASE - EA EMPLOYEE E.L. DISEASE - POLICY LIMIT	 $ 2,000,000 $ 2,000,000 $ 2,000,000

DESCRIPTION OF OPERATIONS / LOCATIONS / VEHICLES (ACORD 101, Additional Remarks Schedule, may be attached if more space is required)

Named Insured(s):
- Waterworks Solutions Intermediate Holdings, Inc.
- Waterworks Solutions Acquisition, Inc.
- The C. I. Thornburg Co., Inc. d/b/a CITCO Water
- National Road Utility Supply, Inc.
- AMP Utility Distribution Services Acquisition, LLC
- Aulick Chemical Solutions Acquisition, LLC
- BioChem Water Solutions, LLC

See Attached...

CERTIFICATE HOLDER

Town of Smyrna Department of Safety & Risk Management ATTN: Henry Urbina
315 S Lowry St
Smyrna TN 37167
United States

CANCELLATION

SHOULD ANY OF THE ABOVE DESCRIBED POLICIES BE CANCELLED BEFORE THE EXPIRATION DATE THEREOF, NOTICE WILL BE DELIVERED IN ACCORDANCE WITH THE POLICY PROVISIONS.

AUTHORIZED REPRESENTATIVE

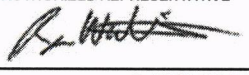

© 1988-2015 ACORD CORPORATION. All rights reserved.

AGENCY CUSTOMER ID: WATESOL-03

LOC #:

ADDITIONAL REMARKS SCHEDULE

AGENCY		NAMED INSURED
Marsh & McLennan Agency LLC		CITCO Water 740 Enterprise Drive Lexington KY 40510
POLICY NUMBER		
CARRIER	NAIC CODE	EFFECTIVE DATE:

ADDITIONAL REMARKS

THIS ADDITIONAL REMARKS FORM IS A SCHEDULE TO ACORD FORM,

FORM NUMBER: 25 **FORM TITLE:** CERTIFICATE OF LIABILITY INSURANCE

- Pump & Process Equipment Company, LLC
- Legacy Environmental Process, LLC

© 2008 ACORD CORPORATION. All rights reserved.

The ACORD name and logo are registered marks of ACORD



AGREEMENT

This Agreement is made and entered into as of this 15 day of May, 20 26, by and between Citco Water, a _____ _____ (the "Bidder") and the Town of Smyrna, Tennessee, a Tennessee municipal corporation (the "Town") for the purpose of _____.

WHEREAS, the Bidder has submitted a quotation for the provision of certain products and/or services to the Town, all in accordance with the terms of the Invitation to Submit Quotations attached hereto and incorporated herein by reference as if set forth at length verbatim as Exhibit A (the "ISQ"), and which Proposal from the Bidder is attached hereto and incorporated herein by reference as if set forth at length verbatim as Exhibit B (the "Quotation"); the ISQ and the Quotation, together with any and all ancillary documents thereto, shall be collectively referred to herein as the "Bid Documents"; and

WHEREAS, the Town now desires to accept the Bidder's quotation, in accordance with the terms set forth in such Bid Documents.

NOW, THEREFORE, in consideration of the mutual covenants contained herein, and for other good and valuable consideration, the receipt and sufficiency of which is hereby acknowledged, the undersigned do hereby agree as follows:

1. Acceptance of Bid Documents. The terms of the Bid Documents, as incorporated herein by reference, are hereby accepted by the parties hereto. The Bidder hereby agrees to provide the goods and/or services contemplated by such Bid Documents in accordance with the terms set forth therein. The Town hereby accepts the Bidder's quotation to provide the goods and/or services contemplated by such Bid Documents in accordance with the terms set forth therein.

2. Entire Agreement. This Agreement, including the exhibits and any other documents referred to herein or therein, which form a part hereof, contains the entire understanding of the parties with respect to its subject matter. There are no restrictions, agreements, promises, warranties, covenants or undertakings other than those expressly set forth herein or therein. This Agreement supersedes all prior written or oral agreements and understandings between the parties with respect to its subject matter and may not be altered, modified or amended, in whole or in part, except by the express written authorization and consent of the parties hereto.

3. Severability. This agreement constitutes the product of negotiations of the parties hereto and any enforcement of hereof will be interpreted in a neutral manner and not more strongly against any party based upon the source of the draftsmanship of this Agreement. If any provision of this Agreement shall be held invalid or unenforceable by a court of competent jurisdiction, the remaining provisions hereof shall continue to be fully effective.

4. Limitation of Liability. The Town of Smyrna shall not be liable for any loss, claim, expense or damage caused by, contributed to or arising out of the acts or omission of Bidder or third parties, whether negligent or otherwise.

5. Warranties. The Bidder warrants to the Town that all materials and equipment furnished under this Contract will be new unless otherwise specified, and that all work will be of good quality, free from faults and defects, suitable for the purpose for which the materials and equipment are furnished, and in conformance with the Agreement. If it does not perform as warranted, Bidder shall use all commercially reasonable efforts to correct the product(s) so that it operates in all material respects in conformity with the written representations of Bidder. If Bidder cannot correct the product(s) within a reasonable period of time, Bidder shall refund the purchase price of the product(s). All work not conforming to these requirements, including substitutions not properly approved and authorized, may be considered defective.

6. Software Deadline, Testing and Acceptance: If applicable to the Agreement, software provided by Bidder shall be installed for the purposes of testing, as stated herein below, no later than one hundred twenty (120) days from the effective date of this Agreement unless the parties, in writing, set a different specific date. In Addition, software provided by Bidder to The Town is subject to inspection and testing to verify that the software conforms to its written specifications and to ensure it meets The Town's needs. The Town shall have seven (7) business days after the software is installed to perform testing of the software using The Town's data. The Town shall provide Bidder with written notice of acceptance or rejection of the software five (5) business days or less after the end of the testing period. If the Town does not provide timely written notice of acceptance or rejection to Bidder, the software shall be deemed to be accepted by The Town. If the software is rejected, The Town may, at its sole discretion, either (1) return the software and receive a refund of all fees paid with respect thereto, or (2) allow Bidder to repair or replace the software, without charge, in a timely manner. In the event The Town elects to allow the Bidder to repair or replace the software, The Town shall have an additional (7) business days in which to accept or reject the software as laid out hereinabove.

7. Use of The Town's Logo or Name: Bidder shall not use The Town's name or any logo in marketing or publicity materials or for marketing or publicity purposes without the prior written authorization from The Town. Bidder shall not issue, publish, or divulge any materials developed or used in the performance of this Agreement or make any statement to the media relating to this Agreement without the prior written consent of The Town.

8. Indemnification. The parties hereto agree that Bidder shall indemnify The Town for any and all claims of negligence, tortious conduct or otherwise unlawful acts committed by Bidder in the performance of their obligations under the terms of this agreement, including any and all attachments or exhibits thereto and Bidder agrees to pay any and all costs associated with the enforcement of the terms of this indemnity agreement by The Town, including but not limited to, court costs, civil judgments, assessments or any other reasonable fees associated therewith. This clause shall survive the expiration or termination of this Agreement and shall remain in full force and effect until the expiration of any applicable statute of limitation. In addition, Article II, Section 29 of the Tennessee Constitution prohibits municipalities from lending their credit to private of public entities and, therefore, prohibits an agreement by The Town to indemnify a third party or agree to a limitation of liability provision.

9. Non-Appropriation: Bidder acknowledges that The Town is a governmental entity, and the validity of this Agreement is based upon the availability of public funding under its authority. In the event The Town fails to appropriate funds or make monies available for any fiscal year covered by the term of this Agreement for services to be provided, this Agreement shall be terminated on the last day of the fiscal year for which funds were appropriated or monies made available for such purposes without liability to The Town, and such termination shall not be a breach of the Agreement, and any unused payment made to Bidder shall be returned to The Town.

10. Tax Exemption: As a tax-exempt entity, The Town shall not be responsible for sales or use taxes incurred for products or services. The Town shall supply Bidder with its Sales and Use Tax Exemption Certificate upon Bidder's request. Bidder shall bear the burden of providing its suppliers with a copy of The Town's tax exemption certificate and Bidder shall assume all liability for such taxes, if any, that should be incurred.

11. Attorney Fees. The parties hereto agree that The Town shall be in no event liable for any attorney's fees which Bidder may incur due to breach of this Agreement by either party; and further, The Town shall not acquiesce to any term in any document that indicates or infers The Town may or shall be responsible for the Attorney's fees of another party or the Bidder's attorney fees.

12. Boycott of Israel. The Bidder certifies that it is not currently engaged in, and covenants that it will not, for the duration of the Contract, engage in a Boycott of Israel, as that term is defined in Tenn. Code Ann. § 12-4-119.

13. Failure to perform. The parties agree, in the event Bidder fails to perform any obligation, other than with regards to the date of delivery, set out in this Agreement, the Town shall be reimbursed by Bidder for any and all expenses associated with having to obtain a new provider to finish out the contracted term, including, but in no way limited to, any charges/fees, which are above and beyond the amount the Town would have paid to Bidder to complete the same task; provided, however, that if the failure, by its nature, is one that can be cured, the Bidder shall have fifteen (15) business days after receipt of written notice from the Town to cure said failure to perform. The parties hereby agree, unless a specific date of delivery is provided in this Agreement or other bid documents, all deliveries shall be made to the Town no later than ninety (90) days from the date of order. The parties further agree that if Bidder, in good faith, is not able to meet this ninety (90) day deadline of delivery due to forces beyond his, her or its control, that were unforeseeable at the time of signing this contract, then this entire Agreement shall be voidable at the sole discretion of the Town. Should the Town elect to void this Agreement due to Bidder's good faith inability, due to forces beyond his, her or its control, and which were unforeseeable at the time of signing this Agreement to meet the delivery deadline, then neither party shall be deemed to have breached this Agreement, and Bidder shall return all monies, within seven (7) business days, paid by the Town for the products/items that could not be delivered in the allotted time.

14. Unilateral Modification of Agreement Not Permitted: Bidder may make unilateral changes to its Privacy Policy, provided any such changes are subject to the provisions of this Agreement but shall not materially alter the use of the service or reduce the level of protection provided to the Town at the time of the execution of this Agreement. Except as provided in the preceding sentence, notwithstanding anything in this Agreement to the contrary, any change to this Agreement made by Bidder that is not in writing and that is not properly executed by the signatures of authorized representatives of the parties hereto, including attestation by The Town's Clerk and approved as to form by the Town Attorney are subject to the terms and conditions of this Agreement.

15. Changes to Terms: Except as provided in Paragraph No. 13 above pertaining to Bidder's Privacy Policy, Bidder shall provide The Town written notice, sent in care of Town Attorney's Office, Smyrna, Tennessee, 315 South Lowry Street, Tennessee 37167, of any proposed change to this Agreement at least ninety (90) days prior to being effective to The Town. The Town shall have thirty (30) days after receiving the written notice to terminate this Agreement, and such cancellation shall not be a breach of this Agreement. Bidder will refund to The Town any payment made by The Town to Bidder equal to the difference between the number of months the payment was intended for and the number of months remaining on this Agreement that the fee was intended to cover.

16. Price Assurance: Unless specifically stated in this Agreement or other bid documents, the bid price shall be valid for the full term of this Agreement. If the Bidder, specifically states that he, she or it cannot honor the bid price for the full term of this Agreement; then this Agreement is voidable at the sole discretion of the Town, if at any time during the full term of this Agreement, Bidder requests to raise the bid

price. If the Town elects to void this Agreement, at its sole discretion, it shall not be deemed to be a breach of the contract by either party.

17. Confidentiality. The Town, as a Tennessee Municipal Corporation is subject to the Tennessee Open Records Act, set out in T.C.A. §10-7-503 et seq; therefore, this Agreement and all documents or materials, in any format, including, but not limited to paper, electronic or virtual, that are public records pursuant to law, are not confidential and are subject to disclosure. The Town will respond to all proper Open Records Requests in the time allowed by law, without any requirement to disclose such request to Bidder or provide Bidder with notice or the time to obtain a protective order. The Town does not have the burden of establishing that information is not confidential information or that its release is authorized to release the records. This section 16 serves to meet such burden and authorization of disclosure.

18. Mediation. The Town may, at its option, require the attempted resolution of any dispute arising under this Agreement by mediation prior to the filing of any lawsuit or other claim. Should any dispute arise, Bidder shall provide the Town notice of any intent to file suit by certified mail. The Town shall notify the Bidder of its intent to exercise its right to mediation within thirty (30) days of receiving such notice. If the Town does not exercise its right to mediation, Bidder may file suit. Any mediator selected under this clause shall be agreed upon by the parties and the costs of such mediation shall be divided and paid equally between the parties.

19. No Presumption Against Drafter: The parties are both business entities having substantial experience with the subject matter of this Agreement, and each has fully participated in the negotiation and drafting of this Agreement. Accordingly, this Agreement shall be construed without regard to the rule that ambiguities in a document are to be construed against the draftsman. No inferences shall be drawn from the fact that the final, duly executed Agreement differs in any respect from any previous draft hereof.

20. Governing Law. This Agreement shall be deemed to have been executed and delivered within the State of Tennessee, and the rights and obligations of the parties shall be construed and enforced in accordance with, and governed by, the laws of the State of Tennessee. The parties agree that all obligations of the parties are performable in Smyrna, Tennessee.

21. Choice of Forum and Venue. The parties' choice of forum and venue shall be exclusively in the courts of Rutherford County, Tennessee or the United States District Court, for the Middle District of Tennessee. The parties hereby waive their right to a jury trial. Any provision of the Agreement held to violate a law or regulation shall be deemed void, and all remaining provisions shall continue in force.

IN WITNESS WHEREOF, the undersigned have executed this Agreement as of the date set forth above.

TOWN OF SMYRNA, TENNESSEE

By: _____
Name: Mary Esther Reed
Title: Mayor

ATTEST:

_____
Amber Hobbs, Town Clerk

BIDDER:

By: Tim Fallen
Title: Municipal Bid Coordinator

ATTEST:

_____

SECTION III - SPECIFICATIONS COMPLIANCE

Unless otherwise noted, all quotations for the annual gas, water and sewer materials shall be in complete accordance with the specifications detailed herein.

Bidders shall note in the space provided below any exceptions or deviations in any way from the specifications of any section of this ISQ. Bidders should provide complete detail of exceptions or deviations.

Proposal Exceptions

Section	Brief Description
Water Materials	Ford, Mueller, Sigma, Romac equivalents to Approved Part #
Sewer Materials	Ford, Sigma equivalents to Approved Part #

By signature below, vendor acknowledges any quotation to be in full compliance with all aspects of each section of the ISQ not noted above. The undersigned hereby declares that no person or party other than the undersigned has any interest whatever in this proposal, that it is without any connection or collusion with any person or persons making or having made any proposal for the same work and without any previous understanding with such person or persons as to relative prices, obviating competition, and that it is made in good faith.

Citco Water	800-999-3484
COMPANY	TELEPHONE NUMBER
Tim Fallen	Municipal Bid Coordinator
REPRESENTATIVE NAME	REPRESENTATIVE TITLE
Tim Fallen	tim.fallen@citcowater.com
SIGNATURE	E-MAIL ADDRESS

Smyrna

SEWER MATERIAL BID LIST 2025-2026

S = SEWER

S	ITEM #	DESCRIPTION	SIZE	APPROVED PART #	ALTERNATE PART #	UNIT	EST. QTY. FY 26/27	BIDDER	UNIT PRICE
		RECLAIMED: METER BOXES and ACCESSORIES							
S	51	36H COMCRETE BOX METER BOX BODY ONLY		36H	36H CONCRETE METER BOX LID WITH CI	EA	6	Citco Water	$47.17
S	52	CI LID "SEWER" FOR 36H BOX		36T CI LID SEWER	36H CONCRETE METER BOX	EA	6	Citco Water	$54.04
S	53	RECLAIMED WATER SQUARE VALVE BOX CASTING & LID		JBS 8006	562-S VB262 CI VALVE BOX	EA	4	Citco Water	$158.04
S	54	SEWER SQUARE CLEANOUT CASTING & LID		JBS 8006	SIGMA C348 LAMPHOLE FRAME AND COVER	EA	6	Citco Water	$234.93
S	ITEM #	DESCRIPTION	SIZE	APPROVED PART #	ALTERNATE PART #	UNIT	EST. QTY. FY 26/27	BIDDER	UNIT PRICE
		MANHOLES							
S	58	MANHOLE CASTING/LID; JBS WATER TIGHT W/ T BAR	26"	JBS 1123		EA	2	Citco Water	NO BID
S	59	MANHOLE CASTING/LID; JBS	26"	JBS 1150		EA	2	Citco Water	$624.00
S	61	CONCRETE MANHOLE RISER	4"			EA	5	Citco Water	NO BID
S	62	CONCRETE MANHOLE RISER	6"			EA	5	Citco Water	NO BID
S	63	CONCRETE MANHOLE RISER	12"			EA	5	Citco Water	NO BID
S	64	MANHOLE RISER RING SOLID-CAST IRON	24"x1.5"		SIGMA 24"X1-1/2" CI MANHOLE RISER	EA	5	Citco Water	$113.70
S	65	MANHOLE RISER RING SOLID-CAST IRON	26" x1.5"			EA	5	Citco Water	NO BID
S	ITEM #	DESCRIPTION	SIZE	APPROVED PART #	ALTERNATE PART #	UNIT	EST. QTY. FY 26/27	BIDDER	UNIT PRICE
		PIPE							
s	71	CTS ROLL REUSE PIPE (500' ROLLS) (PURPLE)	1"			FT	500	Citco Water	NO BID
s	72	CTS ROLL REUSE PIPE (500' ROLLS) (PURPLE)	2"			FT	500	Citco Water	NO BID
S	73	SEWER PIPE SCH 40	4"			FT	200	Citco Water	NO BID
S	74	C-900 REUSE WATER PIPE	4"			FT	50	Citco Water	NO BID
S	75	C-900 PURPLE PIPE	6"			FT	40	Citco Water	NO BID
S	77	SDR 21 SEWER PIPE	6"			FT	100	Citco Water	NO BID
S	78	SDR 26 SEWER PIPE	6"			FT	100	Citco Water	NO BID
S	80	CL 350 DUCTILE IRON SEWER PIPE W/ PROTECTO 401 LINING OR APPROVED EQUAL	8"			FT	50	Citco Water	NO BID
S	81	C900 REUSE WATER PIPE	8"			FT	40	Citco Water	NO BID
S	82	SDR 21 SEWER PIPE	8"			FT	100	Citco Water	NO BID
S	83	SDR 26 SEWER PIPE	8"			FT	100	Citco Water	NO BID
S	84	SDR 35 SEWER PIPE	8"			FT	20	Citco Water	NO BID
S	85	SDR 35 SEWER PIPE	10"			FT	20	Citco Water	NO BID
S	86	C900 REUSE WATER PIPE	12"			FT	20	Citco Water	NO BID
S	87	SDR 26 SEWER PIPE	12"			FT	100	Citco Water	NO BID
S	88	SDR11 IPS HDPE PIPE (RE-USE)	6"			FT	20	Citco Water	NO BID
S	89	SDR11 IPS HDPE PIPE (RE-USE)	8"			FT	20	Citco Water	NO BID
S	92	SDR 26 SEWER PIPE	15"			EA	20	Citco Water	NO BID
S	93	CL 350 DUCTILE IRON SEWER PIPE W/ PROTECTO 401 LINING OR APPROVED EQUAL	20"			EA	20	Citco Water	NO BID
S	ITEM #	DESCRIPTION	SIZE	APPROVED PART #	ALTERNATE PART #	UNIT	EST. QTY. FY 26/27	BIDDER	UNIT PRICE
		REPAIR CLAMPS							
S	96	SEWER REPAIR CLAMP;JCM	8" x 12" LONG (8.20-8.60)	101-0840-12	8"x12.5" FORD FS1-967-125 REPAIR	EA	2	Citco Water	$305.23
S	97	SEWER REPAIR CLAMP; ROMAC	12" (12.10 - 12.50)	171-125012000		EA	2	Citco Water	NO BID
S	ITEM #	DESCRIPTION	SIZE	APPROVED PART #	ALTERNATE PART #	UNIT	EST. QTY. FY 26/27	BIDDER	UNIT PRICE
		TAPPING SADDLES							
S	102	ROMAC SEWER TAPPING SADDLE	(8.00-14.40)	218-66640		EA	2	Citco Water	NO BID
S	ITEM #	DESCRIPTION	SIZE	APPROVED PART #	ALTERNATE PART #	UNIT	EST. QTY. FY 26/27	BIDDER	UNIT PRICE
		FITTINGS							
S	110	BRASS CLEAN-OUT CAP; MATCO-NORCA	4"	10082647091488		EA	15	Citco Water	$19.70
S	111	PLASTIC CLEAN-OUT CAP	4"			EA	10	Citco Water	NO BID

S	112	GLUE FEMALE ADAPTOR; MULTI FITTINGS	SEWER MATERIAL BID LIST 2025-2026		4" SDR35 HUB X FIPT CLEANOUT ADAPT	EA	15	Citco Water	$10.37
S	114	GLUE LONG SWEEP TEE WYE; CHARLOTTE	4"	6 11 942 03564 9		EA	10	Citco Water	NO BID
S	115	GLUE 45° FEMALE COUPLING; LASCO	4"	10 02552871829 6		EA	5	Citco Water	NO BID
S	116	GLUE COUPLING; GPK	4"			EA	10	Citco Water	NO BID
S	117	GLUE 22° FEMALE COUPLING; LASCO	4"			EA	5	Citco Water	NO BID
S	119	QUICK CAP	6"			EA	2	Citco Water	NO BID
S	120	GLUE FEMALE ADAPTOR	6"			EA	15	Citco Water	NO BID
S	122	BRASS CLEAN-OUT CAP; MATCO-NORCA	6"			EA	20	Citco Water	NO BID
S	123	PLASTIC CLEAN-OUT CAP	6"			EA	2	Citco Water	NO BID
S	124	GLUE COUPLING; GPK	6"			EA	6	Citco Water	NO BID
S	125	GLUE 45° WYE; MULTI FITTINGS	6"	22454 40306		EA	15	Citco Water	NO BID
S	126	GLUE 22° FEMALE COUPLING; MULTI FITTINGS	6"	22434 40969		EA	5	Citco Water	NO BID
S	127	GLUE 22° MALE/FEMALE COUPLING; GPK	6"			EA	5	Citco Water	NO BID
S	128	GLUE 45° MALE/FEMALE COUPLING; MULTI FITTINGS	6"	22454 40406		EA	10	Citco Water	NO BID
S	129	GLUE 45 DEGREE/FEMALE COUPLING; MULTI FITTINGS	6"	22454 40506		EA	5	Citco Water	NO BID
S	130	SPIGOT x HUB SDR 35 x SCH 40	6" X 4"			EA	5	Citco Water	NO BID
S	**ITEM #**	**DESCRIPTION**	**SIZE**	**APPROVED PART #**	**ALTERNATE PART #**	**UNIT**	**EST. QTY. FY 26/27**	**BIDDER**	**UNIT PRICE**
		GASKET COUPLINGS							
S	135	GASKET COUPLING; MULTI FITTINGS	6"			EA	2	Citco Water	NO BID
S	136	GASKET 22° COUPLING; HARCO	6"			EA	2	Citco Water	NO BID
S	137	GASKET 45° COUPLING; HARCO	6"			EA	2	Citco Water	NO BID
S	138	GASKET 45° MALE/FEMALE; MULTI FITTINGS	6"			EA	2	Citco Water	NO BID
S	139	GASKET COUPLING; GPK	8"			EA	2	Citco Water	NO BID
S	142	WYE GASKET	8" X 6"			EA	2	Citco Water	NO BID
S	144	GASKET COUPLING; GPK	10"			EA	2	Citco Water	NO BID
S	145	GASKET COUPLING; GPK	12"	106-0012		EA	2	Citco Water	NO BID
S	147	GASKET COUPLING; IPEX	15"	043637		EA	2	Citco Water	NO BID
S	**ITEM #**	**DESCRIPTION**	**SIZE**	**APPROVED PART #**	**ALTERNATE PART #**	**UNIT**	**EST. QTY. FY 26/27**	**BIDDER**	**UNIT PRICE**
		FERNCOS							
S	152	COUPLING; FERNCO	4" CI/PVC X 4" CI/PVC	1056-44		EA	15	Citco Water	$23.49
S	153	COUPLING; FERNCO	4" CONC X 4" CI/PVC	1006-44		EA	6	Citco Water	$6.27
S	154	COUPLING; FERNCO	4" CLAY X 4" PVC	1002-44		EA	6	Citco Water	$34.43
S	155	COUPLING; FERNCO	6" CLAY X 4" PVC	1001-64		EA	6	Citco Water	$52.08
S	156	COUPLING; FERNCO	6" CI/PVC X 4" CI/PVC	1056-64		EA	6	Citco Water	$57.87
S	157	COUPLING; FERNCO	6" CONC X 6" CI/PVC	1006-66		EA	6	Citco Water	$68.25
S	158	COUPLING; FERNCO	6" CLAY X 6" PVC	1002-66		EA	6	Citco Water	$58.39
S	159	COUPLING; FERNCO	6" CLAY X 6' CLAY	1001-66		EA	6	Citco Water	$44.74
S	160	COUPLING;FERNCO	6" CI/PVC X 6" CI/PVC	1056-66		EA	8	Citco Water	$12.41
S	161	COUPLING; FERNCO	6" AC or DI X 6" CI or PVC	1051-66		EA	2	Citco Water	$13.40
S	162	COUPLING; FERNCO	8" CI/PVC X 6" CI/PVC	1056-86		EA	2	Citco Water	$101.74
S	163	COUPLING; FERNCO	8" CI X 8" CI	1056-84		EA	2	Citco Water	$66.42
S	164	COUPLING; FERNCO	8" CONC X 8" CI/PVC	1006-68		EA	2	Citco Water	$86.77
S	165	COUPLING; FERNCO	8" CLAY X 8" PVC	1002-88		EA	2	Citco Water	$66.41
S	166	COUPLING; FERNCO	10" CI/PVC X 10" CI/PVC	1056-1010		EA	2	Citco Water	$86.40
S	167	COUPLING; FERNCO	10" CLAY X 10" CI/PVC	1004-88		EA	2	Citco Water	NO BID
S	168	COUPLING; FERNCO	10" CONC X 10" CI/PVC	1055-1010		EA	2	Citco Water	NO BID
S	169	COUPLING; FERNCO	12" CI/PVC X 12" CI/PVC	1056-1212		EA	2	Citco Water	$105.77
S	170	COUPLING; FERNCO	12" CLAY X 12" CI/PVC	1002-1212		EA	2	Citco Water	$105.77
S	171	COUPLING;FERNCO	12" CONC X 12" PVC	1006-1212		EA	2	Citco Water	$149.32
S	172	COUPLING;FERNCO	15" CLAY X 15" PVC	1002-1515		EA	2	Citco Water	$199.70

WATER MATERIALS BID LIST 2025-2026

Smyrna

WATER	ITEM #	DESCRIPTION	SIZE	APPROVED PART #	ALTERNATE PART #	UNIT	EST. QTY. FY 26/27	BIDDER	UNIT PRICE	ESTIMATED DELIVERY TIME
		METER YOKES/ACCESSORIES								
W	1	METER RETROSETTER W/ 360° LOCKWING & DC; MUELLER (FORD ALTERNATE)	5/8" X 3/4"	203B2446-R5---N	RETRO-2CVBRHH-NL	EA	10	Citco Water	$238.22	10-15 DAYS
W	2	METER RISER; RELOCATOR W/ 360° LOCKWING & DC; MUELLER (FORD ALTERNATE)	5/8" X 3/4" X 7"	234B24118R5---N	VBHH42-7WR-NL	EA	200	Citco Water	$251.13	10-15 DAYS
W	3	METER RISER; RELOCATOR W/ 360° LOCKWING & DC; MUELLER (FORD ALTERNATE)	5/8" X 3/4" X 12"	238B24118R5---N	VBHH42-12-NL	EA	10	Citco Water	$244.66	10-15 DAYS
W	4	METER RISER RELOCATOR W/ 360° LOCKWING & DC; MUELLER (FORD ALTERNATE)	1" X 10"	389B24118R5---N	VBHH44-10-NL	EA	80	Citco Water	$395.97	10-15 DAYS
W	5	METER RISER; RELOCATOR W/ 360° LOCKWING & DC; MUELLER (FORD ALTERNATE)	1.5" X 14"	063B2424--5N	VBRHH46-14-NL	EA	5	Citco Water	NO BID	
W	6	METER RISER; RELOCATOR W/ 360° LOCKWING & DC; MUELLER (FORD ALTERNATE)	2" X 14"	087B2424--5N	VBRHH47-14-NL	EA	10	Citco Water	$1,949.82	10-15 DAYS
W	7	METER RISER; RELOCATOR W/360° LOCKWING & DC; FORD W/BYPASS	2" X 14"	1-VBHH47-14B-NL	n/a	EA	2	Citco Water	NO BID	
W	9	METER SWIVEL 2.5L; FORD	5/8" X 3/4" X 3/4"x 2.5" LONG	C38-23-2.5-NL	MUELLER H-10890N	EA	200	Citco Water	$14.54	10-15 DAYS
W	10	METER SWIVEL COUPLING ; FORD	5/8" x 3/4" x 3/4" x 2.25" LONG	C38-23-2.25-NL	MUELLER H-10890026	EA	5	Citco Water	$14.54	10-15 DAYS
W	11	METER SWIVEL COUPLING STRAIGHT; FORD	1"	C38-44-2-625-NL	MUELLER H-10890	EA	80	Citco Water	$22.39	10-15 DAYS
W	12	FLANGE PAK FOR METER - BRASS (BOX W/2)	1.5"	4415FSC	or equal	EA	8	Citco Water	$62.31	10-15 DAYS
W	13	FLANGE PAK FOR METER - BRASS (BOX W/ 2)	2"	4420FSC	or equal	EA	10	Citco Water	$119.50	10-15 DAYS
W	14	A-24 METER ADAPTOR; FORD	5/8" x 3/4" to 1"	A24-NL	or equal	EA	120	Citco Water	$37.14	10-15 DAYS
W	15	A-47 FLANGED METER ADAPTOR; FORD (BOX W/ 2)	1" TO 2"	A47-NL	or equal	EA	5	Citco Water	$221.04	10-15 DAYS
W	16	A-67 FLANGED METER ADAPTOR; FORD (BOX W/2)	1.5" TO 2"	A67-NL	or equal	EA	5	Citco Water	$318.01	10-15 DAYS

WATER	ITEM #	DESCRIPTION	SIZE	APPROVED PART #	ALTERNATE PART #	UNIT	EST. QTY. FY 26/27	BIDDER	UNIT PRICE	ESTIMATED DELIVERY TIME
		WATER REGULATORS								
W	17	REGULATOR; WATTS	3/4"	LF25AUB-Z3		EA	4	Citco Water	$130.21	10-15 DAYS
W	18	REGULATOR; WATTS	1"	1LF25AUB-Z3		EA	4	Citco Water	$152.38	10-15 DAYS
W	19	REGULATOR; ZURN WILKINS	3/4"	MODEL 70XL		EA	2	Citco Water	$134.44	10-15 DAYS

WATER	ITEM #	DESCRIPTION	SIZE	APPROVED PART #	ALTERNATE PART #	UNIT	EST. QTY. FY 26/27	BIDDER	UNIT PRICE	ESTIMATED DELIVERY TIME
		WATER MOUDLE								
W	21	ITRON UNIVERSAL MOUDLE W/ LID MOUNTING KIT	UNIVERSAL	ERW-1350-001 100W+/CFG-1601-001	n/a	EA	275	Citco Water	NO BID	
W	22	ITRON UNIVERSAL LEAK SENSOR	UNIVERSAL	LDS-1601-001	n/a	EA	10	Citco Water	NO BID	
W	23	CELLULAR 500W MODULE W/ LID MOUNTING KIT	UNIVERSAL	ECW-1700-001/CFG-1601-001	n/a	EA	100	Citco Water	NO BID	

WATER	ITEM #	DESCRIPTION	SIZE	APPROVED PART #	ALTERNATE PART #	UNIT	EST. QTY. FY 26/27	BIDDER	UNIT PRICE	ESTIMATED DELIVERY TIME
		METERS AND PARTS								
W	24	METER CIB/HRE/USG W/ ITRON CONNECTOR; BADGER	5/8" X 3/4"	MODEL 25LL (NSF 61-G MTR)	n/a	EA	200	Citco Water	No Bid	
W	25	METER CIB/HRE/USG W/ ITRON CONNECTOR; BADGER	1"	MODEL 70 LL (NSF 61-G MTR)	n/a	EA	80	Citco Water	No Bid	
W	26	METER CIB/HRE/USG W/ ITRON CONNECTOR; BADGER	1.5	MODEL 120 LL (NSF 61-G-MTR)	n/a	EA	4	Citco Water	No Bid	
W	27	METER ELLIPTICALW/T. PLUG HRE/USG W/ ITRON CONNECTOR W/ D. P.; BADGER	2"	MODEL 170 LL (NSF 61- G-MTR)	n/a	EA	6	Citco Water	No Bid	
W	28	METER BOTTOMS FOR BADGER METER; BADGER	5/8" X 3/4"	57799 - 001	n/a	EA	25	Citco Water	No Bid	
W	29	METER BOTTOMS FOR BADGER METER	1"	59293 - 002	n/a	EA	10	Citco Water	No Bid	
W	37	CHAMBER for M70 BADGER METER	1"	33334-032	n/a	EA	5	Citco Water	No Bid	
W	38	CHAMBER for M120 BADGER METER	1.5"	33334-017	n/a	EA	5	Citco Water	No Bid	
W	39	CHAMBER forM170 BADGER METER	2"	33334-028	n/a	EA	5	Citco Water	No Bid	
W	40	RETROFIT REGISTER w/ ITRON CONNECTOR; BADGER	5/8" X 3/4"	M25/RETRO/RT	n/a	EA	400	Citco Water	No Bid	
W	41	RETROFIT REGISTER w/ ITRON CONNECTOR; BADGER	1"	M70/RETRO/RT	n/a	EA	6	Citco Water	No Bid	
W	42	RETROFIT REGISTER w/ ITRON CONNECTOR; BADGER	1.5"	M120/RETRO/RT	n/a	EA	2	Citco Water	No Bid	
W	43	RETROFIT REGISTER w/ ITRON CONNECTOR; BADGER	2"	M170/RETRO/RT	n/a	EA	4	Citco Water	No Bid	

WATER	ITEM #	DESCRIPTION	SIZE	APPROVED PART #	ALTERNATE PART #	UNIT	EST. QTY. FY 26/27	BIDDER	UNIT PRICE	ESTIMATED DELIVERY TIME
		ULTRASONIC METERS AND PARTS								
W	44	NEPTUNE METER W/ 5' ITRON CONNECTOR in 100 USG	2" x 17"	EU2E1G1SG61		EA	4	Citco Water	NO BID	
W	45	NEPTUNE METER W/ 25' ITRON CONNECTOR in 100 USG W/ FLANGE PAKS	3"X 12"	EU3A1G1SG61		EA	2	Citco Water	NO BID	
W	46	NEPTUNE METER W/ 25' ITRON CONNECTOR in 100 USG W/ FLANGE PAKS	4" X 14"	EU3C1G1SG61		EA	2	Citco Water	NO BID	
W	47	NEPTUNE METER W/ 25' ITRON CONNECTOR in 100 USG W/ FLANGE PAKS	6" X 18"	EU3E1G1SG61		EA	3	Citco Water	NO BID	

WATER	ITEM #	DESCRIPTION	SIZE	APPROVED PART #	ALTERNATE PART #	UNIT	EST. QTY. FY 26/27	BIDDER	UNIT PRICE	ESTIMATED DELIVERY TIME
		METER BOXES AND LIDS								
W	48	SIGMA RMB-132418-SW W/ LC1324T-D READ DOOR AND RECESS TOUCH READ HOLE	5/8" x 3/4" meters	RMB- 132418-SW	OLD CASTLE 1324X18 /DI65-45-12	EA	50	Citco Water	$98.15	10-15 DAYS
W	49	SIGMA RMB-173018-SW W/ LC1730T-D READ DOOR AND RECESS TOUCH READ HOLE	1" - 2" meters	RMB- 173018-SW	OLD CASTLE 1730X18/DI65-45-12	EA	25	Citco Water	$142.90	10-15 DAYS
W	50	SIGMA LID ONLY LC1324T-D READ DOOR AND RECESS TOUCH READ HOLE	5/8" x 3/4" meters	RMB-1324-L-RT	TRI CAST LID DI 6545-12 W/ READ DOOR /TRANS HOLE1324	EA	10	Citco Water	$72.95	10-15 DAYS
W	51	SIGMA LID ONLY LC1730T-D READ DOOR AND RECESS TOUCH READ HOLE	1" - 2" meters	RMB-1730-L-RT	TRI CAST LID DI 6545-12 W/ READ DOOR /TRANS HOLE1730	EA	10	Citco Water	$110.57	10-15 DAYS
W	55	CI SOLID METER BOX LID W/ ITRON TR HOLE FOR BROOKS 36HI5 METER BOX LID ONLY	CI SOLID LID FOR BROOKS 36HI5	LC 223T ITRON	n/a	EA	25	Citco Water	$32.67	10-15 DAYS
		*1324 AND 1730 BOXES SHALL COME W/LID READER DOOR AND RECESS TOUCH READ HOLE		LC1324T-D/1730T-D	Tricast DI w/ read door /trans hole 1324/1730					

WATER	ITEM #	DESCRIPTION	SIZE	APPROVED PART #	ALTERNATE PART #	UNIT	EST. QTY. FY 26/27	BIDDER	UNIT PRICE	ESTIMATED DELIVERY TIME
		VAULTS								
W	56	METER VAULT W/ ALUMINUM LID	2" METER VAULT	SEE DRAWING			2	Citco Water	NO BID	

WATER	ITEM #	DESCRIPTION	SIZE	APPROVED PART #	ALTERNATE PART #	UNIT	EST. QTY. FY 26/27	BIDDER	UNIT PRICE	ESTIMATED DELIVERY TIME
		BRASS FITTINGS								

WATER MATERIALS BID LIST 2025-2026

W	59	BRASS REDUCTION COUPLING	2" X 1.5"	[illegible]		EA	2	Citco Water	$23.13	10-15 DAYS
W	60	ROUGH BRASS 45° COUPLING	1.5"	BR4L		EA	2	Citco Water	$15.72	10-15 DAYS
W	61	ROUGH BRASS 90° COUPLING	1.5"	BR9L		EA	2	Citco Water	$14.45	10-15 DAYS
W	64	FEMALE THREAD BALL VALVE; FORD	3/4"	B11-233W-NL		EA	10	Citco Water	$50.37	10-15 DAYS
W	65	BRASS TEE	2"x2"x2"	NSF61-4		EA	10	Citco Water	$32.57	10-15 DAYS
W	66	BRASS THREADED 90°; MATCO	2"	NSF61-4		EA	10	Citco Water	$23.52	10-15 DAYS
W	67	BRASS THREADED STREET 90°; MATCO	2"	NSF61-4		EA	10	Citco Water	$34.37	10-15 DAYS
W	68	THREADED COUPLING; MATCO	2"	NSF61-4		EA	10	Citco Water	$20.27	10-15 DAYS
W	69	BRASS ALL-THREAD	1.5"			EA	2	Citco Water	$7.26	10-15 DAYS
W	70	BRASS NIPPLE	1.5" X 6"	BRNLU		EA	2	Citco Water	$20.70	10-15 DAYS
W	71	BRASS ALL THREAD; MATCO--NORCA	2"	NBR08CL		EA	20	Citco Water	$11.05	10-15 DAYS
W	72	BRASS NIPPLE; MATCO-NORCA	2" X 6" LONG	NBR086		EA	10	Citco Water	$26.61	10-15 DAYS
W	73	BRASS NIPPLE; BMI	2" X 12" LONG	7 77701049941		EA	10	Citco Water	$52.43	10-15 DAYS
W	74	BRASS NIPPLE	2" X 18" LONG			EA	6	Citco Water	$82.58	10-15 DAYS
W	75	BRASS NIPPLE	2" X 24" LONG			EA	6	Citco Water	$110.11	10-15 DAYS
W	76	CHECK VALVE; RED & WHITE	1.5"	236AB 1 1/2		EA	4	Citco Water	NO BID	
W	77	CHECK VALVE; RED & WHITE	2"	236AB 2		EA	4	Citco Water	NO BID	
W	78	APOLLO BALL VALVE	2"	A94ALF10801A		EA	6	Citco Water	$57.59	10-15 DAYS

WATER	ITEM #	DESCRIPTION	SIZE	APPROVED PART #	ALTERNATE PART #	UNIT	EST. QTY. FY 26/27	BIDDER	UNIT PRICE	ESTIMATED DELIVERY TIME
		COMPRESSION FITTINGS								
W	82	COUPLING; FMLIP; FORD	FMLIP 3/4" X 3/4" CTS	C14-33-Q-NL		EA	5	Citco Water	$23.56	10-15 DAYS
W	83	COUPLING; FORD	3/4" CTS X 3/4" CTS	C44-33-Q-NL		EA	30	Citco Water	$27.27	10-15 DAYS
W	84	COUPLING; FORD	3/4" CTS PAK X 3/4" IP MALE	C84-33-Q-NL		EA	5	Citco Water	$22.39	10-15 DAYS
W	85	COUPLING; FORD	3/4" CTS PACK X 1" CTS PACK	C44-34-Q-NL		EA	30	Citco Water	$31.69	10-15 DAYS
W	86	COUPLING; FMLIP; FORD	FMLIP 1" X 1" CTS	C14-44-Q-NL		EA	15	Citco Water	$31.96	10-15 DAYS
W	87	COUPLING; FORD	1" CTS X 1" CTS	C44-44-Q-NL		EA	25	Citco Water	$31.19	10-15 DAYS
W	88	COUPLING; FORD	1" CTS X 1" I.P. MALE	C84-44-Q-NL		EA	6	Citco Water	$26.52	10-15 DAYS
W	89	COUPLING; FORD	2" CTS X 2" CTS JOINT PK	C44-77-Q-NL		EA	6	Citco Water	$140.91	10-15 DAYS
W	90	2" CTS X 2" IRON PIPE THREAD; FORD	2" CTS X 2" IRON PIPE THREAD	C84-77-Q-NL		EA	6	Citco Water	$105.84	10-15 DAYS
W	91	COUPLING; T'S ; FORD	3/4" X 3/4" X 3/4" CTS	T444-333-Q-NL		EA	20	Citco Water	$65.99	10-15 DAYS
W	92	COUPLING; T'S ; FORD	3/4" X 3/4" X 1" CTS	T444-443-Q-NL		EA	10	Citco Water	$72.49	10-15 DAYS
W	93	COUPLING; T'S; FORD	1" X 1" X 3/4"	T444-443-AWT-Q-NL		EA	5	Citco Water	$70.62	10-15 DAYS
W	94	COUPLING; T'S; FORD	1" X 1" X 1" CTS PAK JOINT	T444-444-Q-NL		EA	5	Citco Water	$70.62	10-15 DAYS
W	95	BALL VALVE; FORD	3/4"	B44-233W-Q-NL		EA	20	Citco Water	$64.32	10-15 DAYS
W	96	BALL VALVE; FORD	1"	B44-344W-Q-NL		EA	20	Citco Water	$125.73	10-15 DAYS
W	97	COUPLING; "Y"; FORD	3/4" X 3/4" X 1" CTS	Y44-243-Q-NL		EA	25	Citco Water	$56.43	10-15 DAYS
W	98	90° COUPLING; FORD	3/4"	L44-33-Q-NL		EA	5	Citco Water	$35.24	10-15 DAYS
W	99	90° COUPLING; FORD	1"	L44-44-Q-NL		EA	5	Citco Water	$45.26	10-15 DAYS
W	100	Q -NUT ASSEMBLY	3/4"	QJN4-3		EA	20	Citco Water	$10.09	10-15 DAYS
W	101	Q-NUT ASSEMBLY	1"	QJN4-4		EA	20	Citco Water	$12.38	10-15 DAYS
W	102	FEMALE COPPER THREAD GRIP JOINT; FORD	3/4" X 3/4" CTS	C04-33-Q-NL		EA	5	Citco Water	$25.47	10-15 DAYS
W	103	FEMALE COPPER THREAD GRIP JOINT; FORD	1" X 1" CTS	C04-44-Q-NL		EA	5	Citco Water	$37.44	10-15 DAYS
W	104	PAK J ASSEMBLY; FORD	1" FEMALE X 3/4" CTS	C08-43-NL		EA	5	Citco Water	$31.77	10-15 DAYS
W	105	COUPLING SWIVEL 45 DEGREE; FORD	3/4"X3/4"	LA04-33S-Q-NL		EA	5	Citco Water	$40.21	10-15 DAYS
W	106	COUPLING SWIVEL 45 DEGREE; FORD	1"X1"	LAO4-44S-Q-NL		EA	5	Citco Water	$57.15	10-15 DAYS
W	107	COUPLING SWIVEL 90 DEGREE; FORD	3/4"X3/4"	L04-33S-Q-NL		EA	5	Citco Water	$44.91	10-15 DAYS
W	108	COUPLING SWIVEL 90 DEGREE; FORD	1"X1"	L04-44S-Q-NL		EA	5	Citco Water	$61.25	10-15 DAYS
W	109	MULTI SERVICE Y NL 1-2" FMLIP X 4-1" FMLIP	2"X1"	Y11-474-NL		EA	5	Citco Water	$110.06	10-15 DAYS

WATER	ITEM #	DESCRIPTION	SIZE	APPROVED PART #	ALTERNATE PART #	UNIT	EST. QTY. FY 26/27	BIDDER	UNIT PRICE	ESTIMATED DELIVERY TIME
		CURB STOPS								
W	113	CURB STOP W/360 DEGREE LOCKING WINGNUT; FORD	3/4"	B43-232WR-Q-NL		EA	200	Citco Water	$68.82	10-15 DAYS
W	114	CURB STOP W/360 DEGREE LOCKING WINGNUT; FORD	1"	B43-344WR-Q-NL		EA	25	Citco Water	$125.41	10-15 DAYS
W	115	BALL VALVE PAD WING/CURB STOP; FORD	1.5"	BF13-666W-NL		EA	4	Citco Water	$257.13	10-15 DAYS
W	116	BALL VALVE PAD WING/CURB STOP; FORD	2"	BF13-777W-NL		EA	4	Citco Water	$411.58	10-15 DAYS
W	117	BALL VALVE PAD WING W/COMPRESSION FITTING; FORD	2"	BF43-777W-Q-NL		EA	6	Citco Water	$461.12	10-15 DAYS

WATER	ITEM #	DESCRIPTION	SIZE	APPROVED PART #	ALTERNATE PART #	UNIT	EST. QTY. FY 26/27	BIDDER	UNIT PRICE	ESTIMATED DELIVERY TIME
		CORP STOPS								
W	122	CORPORATION STOP; FORD	3/4" TAPER X 3/4" CTS	FB1000-3-Q-NL		EA	10	Citco Water	$72.27	10-15 DAYS
W	123	CORPORATION STOP; FORD	1" CC TAPER x 1"CTS	FB1000-4-Q-NL		EA	20	Citco Water	$95.02	10-15 DAYS
W	124	CORPORATION STOP, IRON PIPE THREADS; FORD	1" IP THREAD X1" CTS	FB1100-4-Q-NL		EA	5	Citco Water	$95.02	10-15 DAYS

WATER	ITEM #	DESCRIPTION	SIZE	APPROVED PART #	ALTERNATE PART #	UNIT	EST. QTY. FY 26/27	BIDDER	UNIT PRICE	ESTIMATED DELIVERY TIME
		TAPPING SADDLES								
W	143	TAPPING SADDLE; SMITH BLAIR	2" X 3/4" (2.35-2.56)	315-00025607-000		EA	5	Citco Water	$55.18	10-15 DAYS
W	144	TAPPING SADDLE; SMITH BLAIR	2" X 1" (2.35-2.56)	315-00025609-000		EA	4	Citco Water	$55.18	10-15 DAYS
W	145	TAPPING SADDLE; SMITH BLAIR	2-1/4" X 3/4" (2.44-2.91)	315-00029107-000		EA	5	Citco Water	NO BID	
W	146	TAPPING SADDLE; SMITH BLAIR	2-1/4" X 1" (2.44-2.91)	315-00029109-000		EA	5	Citco Water	NO BID	
W	149	TAPPING SADDLE; SMITH BLAIR	4" X 3/4" (4.40-4.80)	315-00048007-000	ROMAC 202S-4.80X3/4CC DS	EA	4	Citco Water	$78.65	10-15 DAYS
W	151	TAPPING SADDLE; SMITH BLAIR	4" X 1" (4.40-4.80)	315-00048009-000	ROMAC 202S-4.80x1"CC DS	EA	4	Citco Water	$78.65	10-15 DAYS
W	155	TAPPING SADDLE; SMITH BLAIR	4" X 2" (4.40-4.80)	315-00048014-000	ROMAC 202S-4.80X2IP DS	EA	4	Citco Water	$89.76	10-15 DAYS
W	158	TAPPING SADDLE; SMITH BLAIR	6" X 3/4" (6.84-7.60)	315-00076007-000	ROMAC 202S-7.60X3/4CC DS	EA	5	Citco Water	$88.53	10-15 DAYS
W	160	TAPPING SADDLE ; SMITH BLAIR	6" X 1" (5.94-6.90)	315-00069009-000	ROMAC 202S-7.60X1CC DS	EA	5	Citco Water	$88.53	10-15 DAYS
W	161	TAPPING SADDLE; SMITH BLAIR	6" X 1" (6.84-7.60)	315-00076009-000		EA	5	Citco Water	NO BID	
W	163	TAPPING SADDLE; SMITH BLAIR	6" X 2" (5.94-6.90)	315-00069014-000	ROMAC 202S-7.60X2CC DS	EA	5	Citco Water	$99.75	10-15 DAYS

W	165	TAPPING SADDLE ; SMITH BLAIR	6"x2" (6.84-7.60)	315-00101006-000		EA	5	Citco Water	NO BID	
W	166	TAPPING SADDLE ; SMITH BLAIR	8" X 3/4" (8.54-10.10)	315-00101007-000	ROMAC 202S-9.80X3/4CC DS	EA	5	Citco Water	$111.16	10-15 DAYS
W	167	TAPPING SADDLE; SMITH BLAIR	8" X 1" (8.54-10.10)	315-00101009-000	ROMAC 202S-9.80X1CC DS	EA	4	Citco Water	$111.16	10-15 DAYS
W	171	TAPPING SADDLE; SMITH BLAIR	8" X 2" (8.54-10.10)	315-00101014-000	ROMAC 202S-9.80X2CC DS	EA	2	Citco Water	$126.61	10-15 DAYS
W	175	TAPPING SADDLE; SMITH BLAIR	10" X 2" (10.64-12.12)	315-00121214-00	ROMAC 202S-12.12X2IP DS	EA	4	Citco Water	$149.22	10-15 DAYS
W	176	TAPPING SADDLE; SMITH BLAIR	12" X 3/4" (12.64-14.32)	315-00143207-000	ROMAC 202S-14.38X3/4"CC DS	EA	2	Citco Water	$151.27	10-15 DAYS
W	178	TAPPING SADDLE; SMITH BLAIR	12" X 1" (12.62-14.32)	315-00143209-000	ROMAC 202SB-14.38X1"CC	EA	2	Citco Water	$340.64	10-15 DAYS
W	180	TAPPING SADDLE; SMITH BLAIR	12"-14"X 2" (12.62-14.32)	315-00143214-000	ROMAC 202S-14.38X2IP DS	EA	2	Citco Water	$172.87	10-15 DAYS
W	181	TAPPING SADDLE; SMITH BLAIR	16"- X 2" (17.25-17.80)	317-00178014-000	ROMAC 202S-18.90X2IP DS	EA	2	Citco Water	$207.05	10-15 DAYS
W	182	TAPPING SADDLE; SMITH BLAIR	16"- X 2" (17.25-17.80)	317-00195014-000		EA	2	Citco Water	NO BID	
W	183	TAPPING SADDLE:SMITH BLAIR	20"X2" (21.55-21.65)	317-00216014-000	ROMAC 202S-22.70X2IP DS	EA	2	Citco Water	$336.68	10-15 DAYS
W	184	TAPPING SADDLE; SMITH BLAIR	24" X 2" (25.75-25.85)	317-00258014-000	ROMAC 202S-25.90X2IPT DS	EA	2	Citco Water	**$395.88**	10-15 DAYS

WATER	ITEM #	DESCRIPTION	SIZE	APPROVED PART #	ALTERNATE PART #	UNIT	EST. QTY. FY 26/27	BIDDER	UNIT PRICE	ESTIMATED DELIVERY TIME
		REPAIR CLAMPS								
W	188	REPAIR CLAMP; SMITH BLAIR	3/4" X 6" FL CIR		3/4"x6" FORD FSC-105-6R WRAP CLAMP	EA	2	Citco Water	$61.56	10-15 DAYS
W	189	REPAIR CLAMP; SMITH BLAIR	1" X 6" FL CIR (PVC)	244-00013206-000	1"x6" FORD FSC-132-6R WRAP CLAMP	EA	2	Citco Water	$61.98	10-15 DAYS
W	190	REPAIR CLAMP; SMITH BLAIR	1-1/4" X 6"	244-00016609-000	1-1/4"x6" FORD FSC-166-6R WRAP	EA	4	Citco Water	$63.15	10-15 DAYS
W	191	REPAIR CLAMP; SMITH BLAIR	1.5" X 6" FL CIR (PVC)	244-00019006-000	1-1/2"x6" FORD FSC-190-6R WRAP	EA	4	Citco Water	$63.90	10-15 DAYS
W	192	REPAIR CLAMP; SMITH BLAIR	2" X 7" FL CIR (2.35-2.63)	226-00023807-000	2"X7-1/2" F1-263-75 FULL CIRCLE	EA	8	Citco Water	$67.08	10-15 DAYS
W	193	REPAIR CLAMP; SMITH BLAIR	2.5" X 7" FL CIR (2.70-3.00)	226-00027507-000	2-1/4-2-1/2"x7.5" FORD F1-300-75	EA	6	Citco Water	$71.27	10-15 DAYS
W	194	REPAIR CLAMP; SMITH BLAIR	2" X 12.5" FL CIR (2.35-2.63)	226-00023812-000	2"x12-1/2" FORD F1-263-125 REPAIR	EA	2	Citco Water	$95.56	10-15 DAYS
W	195	REPAIR CLAMP; SMITH BLAIR	2.5" X 12" FL CIR (2.70-3.00)	226-00027512-000	2-1/4-2-1/2"x12-1/2" FORD	EA	2	Citco Water	$101.15	10-15 DAYS
W	196	REPAIR CLAMP; SMITH BLAIR	2" X 15" (2.35-2.63)	226-00023815-000	2"x15" FORD F1-263-15 REPAIR CLAMP	EA	2	Citco Water	$119.68	10-15 DAYS
W	197	REPAIR CLAMP; SMITH BLAIR	2" X 25" (2.35-2.63)	226-00023825-000	2"X24" FORD FS1-263X24" REPAIR	EA	2	Citco Water	$264.01	10-15 DAYS
W	198	REPAIR CLAMP; SMITH BLAIR	2.25" X 25" (2.70-3.00)	226-00027525-000	FORD F1-400-75 3IN REPAIR	EA	2	Citco Water	$79.24	10-15 DAYS
W	199	REPAIR CLAMP; SMITH BLAIR	3" X 7.5" FL CIR (3.73-4.00)	226-00037507-000		EA	2	Citco Water	NO BID	
W	200	REPAIR CLAMP; SMITH BLAIR	3" X 12" FL CIR (3.46-3.70)	226-00035012-000	3"x12.5" FORD F1-370-125 REPAIR	EA	2	Citco Water	$113.58	10-15 DAYS
W	201	REPAIR CLAMP; SMITH BLAIR	4" X 7.5" FL CIR (3.96-4.25)	226-00040007-000	4"x7.5" FORD F1-514-75 REPAIR	EA	2	Citco Water	$86.86	10-15 DAYS
W	202	REPAIR CLAMP; SMITH BLAIR	4" X 7.5" FL CIR (4.45-4.73)	226-00045007-000		EA	2	Citco Water	NO BID	
W	203	REPAIR CLAMP; SMITH BLAIR	4" X 7.5" FL CIR (4.74-5.14)	226-00048007-000		EA	6	Citco Water	NO BID	
W	204	REPAIR CLAMP; SMITH BLAIR	4 X 12.5" FL CIR (4.74-5.14)	226-00048012-000	4"x12-1/2" FORD F1-514-125 REPAIR	EA	2	Citco Water	$139.02	10-15 DAYS
W	205	REPAIR CLAMP; SMITH BLAIR	4 X 15" FL CIR (PVC) (4.74-5.14)	226-00048015-000	4"X15" FORD F1-514-15 REPAIR CLAMP	EA	2	Citco Water	$151.21	10-15 DAYS
W	207	REPAIR CLAMP; SMITH BLAIR	6" X 7" FL CIR (6.84-7.24)	226-00069007-000	6"x7.5" FORD F1-724-75 REPAIR	EA	10	Citco Water	$104.55	10-15 DAYS
W	208	REPAIR CLAMP; SMITH BLAIR	6" X 7.5" FL CIR (6.56-6.96)	226-00066307-000	6"x7.5" FORD F1-696-75 REPAIR	EA	4	Citco Water	$102.28	10-15 DAYS
W	210	REPAIR CLAMP; SMITH BLAIR	6" X 12" FL CIR (6.56-6.96)	226-00066312-000	6"x12.5" FORD F1-696-125 REPAIR	EA	2	Citco Water	$164.24	10-15 DAYS
W	211	REPAIR CLAMP; SMITH BLAIR	6" X 12" FL CIR (6.84-7.24)	226-00069012-000	6"x12.5" FORD F1-724-125 REPAIR	EA	4	Citco Water	$167.28	10-15 DAYS
W	212	REPAIR CLAMP; SMITH BLAIR	6" X 12.5" (7.05-7.45)	226-00071012-000	6"x12.5" FORD F1-745-125 REPAIR	EA	2	Citco Water	$167.28	10-15 DAYS
W	213	REPAIR CLAMP; SMITH BLAIR	6" X 15" FL CIR (6.56-6.96)	226-00066315-000	6"x15" FORD F1-696-15 REPAIR CLAMP	EA	2	Citco Water	$180.34	10-15 DAYS
W	214	REPAIR CLAMP; SMITH BLAIR	6" X 15" (6.84-7.24)	226-00069015-000	6"x15" FORD F1-724-15 REPAIR CLAMP	EA	2	Citco Water	$184.89	10-15 DAYS
W	215	REPAIR CLAMP; SMITH BLAIR	6" X 15" (7.05-7.45)	226-00071015-000	6"X15" FORD F1-745-15 REPAIR CLAMP	EA	2	Citco Water	$184.89	10-15 DAYS
W	217	REPAIR CLAMP; SMITH BLAIR	8" X 7" FL CIR (8.54-8.94)	226-00086307-000	8"x7.5" FORD F1-894-75 REPAIR	EA	4	Citco Water	$122.63	10-15 DAYS
W	218	REPAIR CLAMP; SMITH BLAIR	8" X 7" FL CIR (8.99-9.39)	226-00090507-000	8"x7.5" FORD F1-939-75 REPAIR	EA	8	Citco Water	$122.63	10-15 DAYS
W	219	REPAIR CLAMP; SMITH BLAIR	8" X 12" FL CIR (8.99-9.39, DIP)	226-00090512-000	8"x12-1/2" FORD F1-939-125 REPAIR	EA	2	Citco Water	$196.46	10-15 DAYS
W	220	REPAIR CLAMP; SMITH BLAIR	8" X 15" (8.54-8.94)	226-00086315-000	8"x15" FORD F1-894-15 REPAIR CLAMP	EA	2	Citco Water	$224.61	10-15 DAYS
W	221	REPAIR CLAMP; SMITH BLAIR	8" X 15" (8.99-9.39)	226-00090515-000	8"x15" FORD F1-939-15 REPAIR CLAMP	EA	2	Citco Water	$224.61	10-15 DAYS
W	222	REPAIR CLAMP; SMITH BLAIR	10" X 15" FL CIR (DIP) (11.04-11.44)	226-00111015-000		EA	2	Citco Water	NO BID	
W	223	REPAIR CLAMP; SMITH BLAIR	10" X 20" (11.04-11.44)	226-00114020-000	10"x20" FORD F1-1144-20 REPAIR	EA	2	Citco Water	$387.04	10-15 DAYS
W	224	REPAIR CLAMP; SMITH BLAIR	12" X 7" FL CIR (13.10-13.50)	226-00132007-000	12"X7-1/2" F1-1350-75 REPAIR CLAMP	EA	2	Citco Water	$182.35	10-15 DAYS
W	225	REPAIR CLAMP; SMITH BLAIR	12" X 12" FL CIR (DIP) (13.10-13.50)	226-00132012-000	12"x12-1/2" FORD F1-1350-125	EA	2	Citco Water	$291.66	10-15 DAYS
W	226	REPAIR CLAMP; SMITH BLAIR	12' X 15' FL CIR (DIP) (13.10 - 13.50)	226-00132015-000	12"x15" FORD F1-1350-15 REPAIR	EA	2	Citco Water	$329.78	10-15 DAYS
W	227	REPAIR CLAMP; SMITH BLAIR	16" X 15" (17.15-17.90)	228-20171515-000		EA	2	Citco Water	NO BID	
W	229	REPAIR CLAMP; SMITH BLAIR	16" X 20" FL CIR (17.15-17.90)	228-20178220-000		EA	2	Citco Water	NO BID	
W	230	REPAIR CLAMP; SMITH BLAIR	16" X 30" (17.15-17.90)	228-20171530-000		EA	2	Citco Water	NO BID	
W	231	REPAIR CLAMP; SMITH BLAIR	18" X 20" FL CIR (19.23-19.98)	228-20192320-000	FORD F2-1998-20 FULL CIRCLE REPAIR	EA	2	Citco Water	$919.32	10-15 DAYS
W	232	REPAIR CLAMP; SMITH BLAIR	20" X 20" (21.52-22.27)	228-20215220-000	FORD F2-1998-20 FULL CIRCLE REPAIR	EA	2	Citco Water	$524.12	10-15 DAYS
W	233	REPAIR CLAMP; SMITH BLAIR	24" X 30" FL CIR (25.70-26.80)	228-30257030-000		EA	2	Citco Water	NO BID	
W	234	REPAIR CLAMP; SMITH BLAIR	24" X 20" FL CIR (25.70-26.80)	228-30257020-000		EA	2	Citco Water	NO BID	
W	237	REPAIR CLAMP; SMITH BLAIR W/1" CC TAP	6"X7.5" W/1" TAP (6.84-7.24)	238-00069007-009	6"x12.5"x1" CC FORD F1-724-125-CC4	EA	2	Citco Water	$220.03	10-15 DAYS
W	238	REPAIR CLAMP; SMITH BLAIR W/1" CC TAP	8"X7.5" W/ 1" TAP (8.99-9.39)	238-00090507-009	^8"x12.5"x 1"CC FORD FS1 939 125 CC4			Citco Water	$249.52	10-15 DAYS

WATER	ITEM #	DESCRIPTION	SIZE	APPROVED PART #	ALTERNATE PART #	UNIT	EST. QTY. FY 26/27	BIDDER	UNIT PRICE	ESTIMATED DELIVERY TIME
		HYMAX								
W	240	HYMAX; KRAUSZ	1.5" (1.61-2.13)	860-56-0041-16	1-1/2" HYMAX 860-54-0041-16	EA	4	Citco Water	$153.38	10-15 DAYS
W	241	HYMAX; KRAUSZ	2" (2.10-3.03)	860-56-0054-16	2" HYMAX-2 860-54-0054-16	EA	4	Citco Water	$164.88	10-15 DAYS
W	242	HYMAX; KRAUSZ	3" (3.46-4.33)	860-56-0088-16	3" HYMAX-2 860-54-0088-16	EA	4	Citco Water	$217.51	10-15 DAYS
W	243	HYMAX; KRAUSZ	4" (4.25-5.63)	860-56-0108-16C	4" HYMAX-2 860-54-0108-16	EA	4	Citco Water	$278.71	10-15 DAYS
W	244	HYMAX; KRAUSZ	6" (6.42-7.68)	860-56-0163-16	6" HYMAX-2 860-54-0163-16	EA	10	Citco Water	$369.11	10-15 DAYS
W	245	HYMAX; KRAUSZ	8" (8.54-9.84)	860-56-0217-16	8" HYMAX-2 860-54-0217-16	EA	10	Citco Water	$416.74	10-15 DAYS
W	246	HYMAX; KRAUSZ	10" (10.70 - 12.00)	860-56-0272-16	10" HYMAX-2 860-54-0272-16	EA	2	Citco Water	$536.11	10-15 DAYS
W	247	HYMAX; KRAUSZ	12" (12.40-13.66)	860-56-0315-16	12" HYMAX-2 860-54-0315-16	EA	2	Citco Water	$632.79	10-15 DAYS

WATER	ITEM #	DESCRIPTION	SIZE	APPROVED PART #	ALTERNATE PART #	UNIT	EST. QTY. FY 26/27	BIDDER	UNIT PRICE	ESTIMATED DELIVERY TIME
		PIPE								
W	254	PEX PIPE; REHAU 300 ft. Roll	3/4"	261056-100	n/a	FT	2000	Citco Water	$0.79	10-15 DAYS
W	255	PEX PIPE; REHAU 300 ft. roll	1"	261076-300	n/a	FT	4000	Citco Water	$1.28	10-15 DAYS
W	256	PEX PIPE; REHAU 300 ft. roll	2"		n/a	FT	300	Citco Water	$7.98	10-15 DAYS
W	258	CL-350 DUCTILE IRON WATER PIPE W/ BITUMINOUS SEAL COATING INSIDE & OUTSIDE	3"	CL-350	n/a	FT	60	Citco Water	$78.07	10-15 DAYS
W	263	CL-350 DUCTILE IRON WATER PIPE W/ BITUMINOUS SEAL COATING INSIDE & OUTSIDE	12"	CL-350	n/a	FT	40	Citco Water	$57.05	10-15 DAYS

W	264	CL-350 DUCTILE IRON WATER PIPE W/ BITUMINOUS SEAL COATING INSIDE & OUTSIDE	16"	CL-350	n/a	FT	40	Citco Water	$96.00	10-15 DAYS
W	265	CL-350 DUCTILE IRON WATER PIPE W/ BITUMINOUS SEAL COATING INSIDE & OUTSIDE	18"	CL-350	n/a	FT	40	Citco Water	NO BID	
W	266	CL-350 DUCTILE IRON WATER PIPE W/ BITUMINOUS SEAL COATING INSIDE & OUTSIDE	24"	CL-350	n/a	FT	40	Citco Water	$179.87	10-15 DAYS
W	267	CL-350 DUCTILE IRON WATER PIPE W/ BITUMINOUS SEAL COATING INSIDE & OUTSIDE	36"	CL-350	n/a	FT	40	Citco Water	$417.59	10-15 DAYS
W	268	C900 WATER PIPE SDR 14	4"	C-900		FT	100	Citco Water	$6.46	10-15 DAYS
W	269	C900 WATER PIPE SDR 14	6"	C-900		FT	200	Citco Water	$12.98	10-15 DAYS
W	270	C900 WATER PIPE SDR 14	8"	C-900		FT	200	Citco Water	$22.36	10-15 DAYS
W	271	C900 WATER PIPE SDR 14	10"	C-900		FT	40	Citco Water	$34.07	10-15 DAYS
W	273	SDR 11, 2" IPS BLACK WATER PIPE	2"	SDR-11		FT	100	Citco Water	**$0.90**	10-15 DAYS

WATER	ITEM #	DESCRIPTION	SIZE	APPROVED PART #	ALTERNATE PART #	UNIT	EST. QTY. FY 26/27	BIDDER	UNIT PRICE	ESTIMATED DELIVERY TIME
		PIPE FITTINGS								
W	277	PIPE STIFFENER (PLASTIC)	3/4"			EA	1000	Citco Water	$0.44	10-15 DAYS
W	278	PIPE STIFFENER (PLASTIC)	1"			EA	2000	Citco Water	$0.31	10-15 DAYS
W	279	PIPE INSERT; FORD # 55 STAINLESS STELL	2"			EA	14	Citco Water	$3.10	10-15 DAYS
W	293	CAP; TYLER	2"			EA	2	Citco Water	$70.67	10-15 DAYS
W	294	CAP; TYLER	3"			EA	2	Citco Water	$43.92	10-15 DAYS
W	295	CAP; TYLER	4"			EA	2	Citco Water	$54.41	10-15 DAYS
W	296	CAP; TYLER	4" X 2"			EA	2	Citco Water	$60.31	10-15 DAYS
W	297	CAP; TYLER	6"			EA	2	Citco Water	$97.68	10-15 DAYS
W	298	CAP; TYLER	6" X 2"			EA	2	Citco Water	$114.72	10-15 DAYS
W	299	CAP; TYLER	8"			EA	2	Citco Water	$146.19	10-15 DAYS
W	300	CAP; TYLER	8" X 2"			EA	2	Citco Water	$162.58	10-15 DAYS
W	345	ANCHOR COUPLING; TYLER	6" X 13" LONG			EA	6	Citco Water	$218.96	10-15 DAYS
W	346	ANCHOR COUPLING; TYLER	6" X 18" LONG			EA	6	Citco Water	$302.87	10-15 DAYS
W	347	ANCHOR COUPLING; TYLER	6" X 24" LONG			EA	6	Citco Water	$351.38	10-15 DAYS

WATER	ITEM #	DESCRIPTION	SIZE	APPROVED PART #	ALTERNATE PART #	UNIT	EST. QTY. FY 26/27	BIDDER	UNIT PRICE	ESTIMATED DELIVERY TIME
		ACCESSORIES								
W	389	M.J. ACC KIT; UFCO	3"	912-096-5892	3" STANDARD C153 MJ ACCESSORY PACK	EA	4	Citco Water	$26.67	10-15 DAYS
W	390	M.J. ACC KIT; SIGMA	4"	DGP 4"	4" STANDARD C153 MJ ACCESSORY PACK	EA	5	Citco Water	$34.67	10-15 DAYS
W	391	M.J. BOLT PACK SET	6"	SIP 6"	6" MJ ACC SET INCLUDES	EA	10	Citco Water	$46.67	10-15 DAYS
W	392	M.J. BOLT PACK SET	8"	SIP 8"	8" MJ ACC SET INCLUDES	EA	4	Citco Water	$52.00	10-15 DAYS
W	393	M.J. ACC KIT; SIGMA	10"	DGP 10	10" MJ ACC SET INCLUDES	EA	2	Citco Water	$74.00	10-15 DAYS
W	394	M.J. ACC KIT	12"		12" STANDARD C153 MJ ACCESSORY SET	EA	4	Citco Water	$76.00	10-15 DAYS
W	395	M.J. ACC KIT	16"		16" MJ ACC SET USA INCLUDES	EA	4	Citco Water	$106.86	10-15 DAYS
W	397	TRANSITION GASKET	4"		4" TRANSITION MJ-PVC GASKET	EA	4	Citco Water	$10.67	10-15 DAYS
W	398	TRANSITION GASKET	6"		6" TRANSITION MJ-PVC GASKET	EA	8	Citco Water	$11.33	10-15 DAYS
W	399	TRANSITION GASKET	8"		8" TRANSITION MJ-PVC GASKET	EA	6	Citco Water	$15.33	10-15 DAYS
W	400	MEGALUG D. I.; FORD	3"	UFR 1500-SA-3-I	3" FORD USA UFR1500-SA-3-U PVC	EA	4	Citco Water	$55.41	10-15 DAYS
W	401	MEGALUG AND ACC KIT (D I); SIGMA	4"	829,805,219,567	4" FORD UFR1400-DA-4-U 1400	EA	4	Citco Water	$52.06	10-15 DAYS
W	402	MEGALUG AND ACC KIT (D I); SIGMA	6"	UFR 1400-DA-6	6" FORD UFR1400-DA-6-U 1400	EA	4	Citco Water	$64.75	10-15 DAYS
W	403	MEGALUG AND ACC KIT (D I); EBAA	8"	110 804 1903	8" FORD UFR1400-DA-8-U 1400	EA	2	Citco Water	$87.89	10-15 DAYS
W	404	MEGALUG AND ACC KIT (D I); EBAA	10"	1,110,041,903	10" FORD UFR1400-DA-10-U 1400	EA	2	Citco Water	$125.57	10-15 DAYS
W	405	MEGALUG AND ACC KIT (D I); FORD	12"	UFR 1400-DA-12-I	12" FORD UFR1400-DA-12-U 1400	EA	2	Citco Water	$168.33	10-15 DAYS
W	406	MEGALUG AND ACC KIT (D I)	16"		16" FORD UFR1400-DA-16-U 1400	EA	4	Citco Water	$307.15	10-15 DAYS
W	407	MEGALUG AND ACC KIT (D I)	24"		24" USA UFR1400-DA-24-U	EA	2	Citco Water	$695.88	10-15 DAYS
W	408	MEGALUG AND ACC KIT (D.I.)	36"		36" USA UFR1400-DA-36-U	EA	2	Citco Water	$1,838.42	10-15 DAYS
W	412	MEGALUG AND ACC KIT (C900); SIGMA	4"	829,805,219,864	4" SIGMA SLCEP4 ONE-LOK C900	EA	10	Citco Water	$57.33	10-15 DAYS
W	413	MEGALUG AND ACC KIT (C900); SIGMA	6"	829 805 219 871	6" SIGMA SLCEP6 ONE-LOK C900	EA	40	Citco Water	$71.67	10-15 DAYS
W	414	MEGALUG AND ACC KIT (C900); SIGMA	8"	829 805 219 888	8" SIGMA SLCEP8 ONE-LOK C900	EA	30	Citco Water	$96.51	10-15 DAYS
W	415	C900 MEGALUG; EBAA	10"	2,010,161,903	10" SIGMA SLCEP10 ONE-LOK C900	EA	6	Citco Water	$168.18	10-15 DAYS
W	416	C900 MEGALUG; SIGMA	12"	829 052 199 01	12" SIGMA SLCEP12 ONE-LOK C900	EA	6	Citco Water	$176.30	10-15 DAYS
W	417	MEGALUG AND ACC KIT ((DI)	18"		18" SIGMA SLCEP18 ONE-LOK C-900	EA	4	Citco Water	$440.99	10-15 DAYS
W	418	MEGALUG AND ACC KIT (D I)	20"		20" SIGMA SLDEP20 ONE-LOK DIP MEGA	EA	4	Citco Water	$473.48	10-15 DAYS

WATER	ITEM #	DESCRIPTION	SIZE	APPROVED PART #	ALTERNATE PART #	UNIT	EST. QTY. FY 26/27	BIDDER	UNIT PRICE	ESTIMATED DELIVERY TIME
		VALVES								
W	423	GATE VALVE - THREADED; KENNEDY	2"	228D2X	2" EJ 2100200 RW THREADED GATE	EA	10	Citco Water	**453.19**	10-15 DAYS
W	424	GATE VALVE; KENNEDY	3"	324,067,014,001	3" EJ 2200300 MJ RW GATE VALVE	EA	2	Citco Water	$620.99	10-15 DAYS
W	425	GATE VALVE' M&H	4"	367,571,011,008	4" EJ 2200400 MJ RW GATE VALVE	EA	2	Citco Water	$689.99	10-15 DAYS
W	426	GATE VALVE; M&H	6"	467,571,011,008	6" EJ 2200600 MJ RW GATE VALVE	EA	5	Citco Water	$868.74	10-15 DAYS
W	427	TAPPING VALVE; MUELLER	6"	4,187,696	6" CLOW F6106 MJXFLG RW GATE VALVE	EA	2	Citco Water	$1,053.39	10-15 DAYS
W	428	GATE VALVE; MUELLER	8"	080A236023LN	8" EJ 2200800 MJ RW GATE VALVE	EA	5	Citco Water	$1,398.79	10-15 DAYS
W	429	GATE VALVE	10"		10" EJ 2201000 MJ RW GATE VALVE	EA	1	Citco Water	$2,181.39	10-15 DAYS
W	430	GATE VALVE; M&H	12"	587,571,011,008	12" EJ 2201200 RW MJ GATE VALVE	EA	1	Citco Water	$2,759.94	10-15 DAYS
W	431	GATE VALVE; MUELLER	16"	11,505,876,777	16" EJ 2201600 MJ RW GATE VALVE	EA	1	Citco Water	$9,251.91	10-15 DAYS

WATER	ITEM #	DESCRIPTION	SIZE	APPROVED PART #	ALTERNATE PART #	UNIT	EST. QTY. FY 26/27	BIDDER	UNIT PRICE	ESTIMATED DELIVERY TIME
		VALVE BOXES/RISERS								
W	436	SQUARE VALVE BOX CASTING & LID		JBS 8006	1" CI VALVE BOX RISER	EA	15	Citco Water	**11.45**	10-15 DAYS
W	437	SQUARE STEEL VALVE BOX RISER	1.5"	JBS 8006	1-1/2" CI VALVE BOX RISER	EA	5	Citco Water	**23.96**	10-15 DAYS
W	438	CONCRETE VALVE BOX RISER	2"		2" CI VALVE BOX RISER	EA	15	Citco Water	$23.96	10-15 DAYS
W	439	CONCRETE VALVE BOX RISER	4"		4" CI VALVE BOX RISER	EA	15	Citco Water	$38.11	10-15 DAYS
W	440	CONCRETE VALVE BOX RISER	6"		6" CI VALVE BOX RISER	EA	15	Citco Water	$54.44	10-15 DAYS
W	441	CONCRETE VALVE BOX RISER	12"			EA	10	Citco Water	NO BID	
W	442	CONCRETE VALVE BOX RISER	18"			EA	10	Citco Water	NO BID	

W	500	VALVE BOX EXTENSION; SIGMA	1"	VBR-1		EA	25	Citco Water	NO BID	
W	501	VALVE BOX EXTENSION; SIGMA	1.5"	VBR-1.5		EA	25	Citco Water	NO BID	
W	502	VALVE BOX EXTENSION; SIGMA	2"	VBR-2		EA	30	Citco Water	NO BID	
W	503	VALVE BOX EXTENSION; SIGMA	3"	VBR-3		EA	25	Citco Water	NO BID	
W	504	VALVE BOX EXTENSION; SIGMA	4"	VBR-4		EA	25	Citco Water	NO BID	
W	505	VALVE BOX EXTENSION; SIGMA	6"	VBR-6		EA	25	Citco Water	NO BID	
		HIGHLIGHTED PORTION IS ALSO ON THE GAS BID (G-232-237)	*PLEASE ALSO BID ON GAS (G-232-237) AS WELL*	*PLEASE ALSO BID ON GAS (G-232-237) AS WELL*						

WATER	ITEM #	DESCRIPTION	SIZE	APPROVED PART #	ALTERNATE PART #	UNIT	EST. QTY. FY 26/27	BIDDER	UNIT PRICE	ESTIMATED DELIVERY TIME
		HYDRANTS								
W	448	BLOW OFF-ABOVE GROUND; KUPFERLE	2" STRAIGHT BURY	MODEL 77	#77 MAINGUARD POST HYDRANT	EA	8	Citco Water	**945.83**	10-15 DAYS
W	449	BLOW OFF-BELOW GROUND; KUPFERLE	2" STRAIGHT BURY	MODEL 78	#78 MAINGUARD BLOW-OFF HYDRANT	EA	5	Citco Water	$940.83	10-15 DAYS
W	450	POST HYDRANT,	3' BURY, 3" MJ SHOE, 2-1/2" OUTLET	M&H MODEL 33	#2 ECLIPSE POST HYDRANT	EA	2	Citco Water	$1,360.83	10-15 DAYS
W	451	FIRE HYDRANT ASSEMBLY; M&H YELLOW	5 1/4" 3' 6"bury	MODEL 129 3-Way 1 Pumper/2 Hose	5-1/4" M&H FIRE HYDRANT	EA	6	Citco Water	$3,431.20	10-15 DAYS
W	452	HYDRANT TRAFFIC REPAIR KIT ; MUELLER	5 1/4"	MUELLER HRP301	HRPI-301 5-1/4 SAFETY FLANGE REPAIR KIT	EA	5	Citco Water	$168.30	10-15 DAYS
W	453	HYDRANT TRAFFIC REPAIR KIT ; AMERICAN	5 1/4"	AMERICAN AD-B62B-KIT	HRPI-684 NEW STYLE TRAFFIC REPAIR KIT	EA	1	Citco Water	$181.33	10-15 DAYS
W	454	HYDRANT TRAFFIC REPAIR KIT ; M&H	5 1/4"	M&H	M&H 5-1/4" 129T TRAFFIC HYDRANT	EA	5	Citco Water	$118.85	10-15 DAYS
W	458	MUELLER EXTENSION KIT	5 1/4" X 6"			EA	1	Citco Water	NO BID	
W	459	MUELLER EXTENSION KIT	5 1/4" X 12"	A320-010		EA	1	Citco Water	NO BID	
W	460	MUELLER EXTENSION KIT	5 1/4" X 18"	A320-16	1'6" HRPI 5-1/4 HYDRANT EXTENSION	EA	1	Citco Water	$560.48	10-15 DAYS
W	461	MUELLER EXTENSION KIT	5 1/4" X 24"	A320-20	2'0" HRPI 5-1/4 HYDRANT EXTENSION	EA	1	Citco Water	$632.67	10-15 DAYS
W	462	M&H EXTENSION KIT	5 1/4" X 6"		0'6" M&H 5-1/4" 129 HYDRANT	EA	1	Citco Water	$734.53	10-15 DAYS
W	463	M&H EXTENSION KIT	5 1/4" X 12"	441129-5-12	1'0" M&H 5-1/4" 129 HYDRANT	EA	1	Citco Water	$857.73	10-15 DAYS
W	464	M&H EXTENSION KIT	5 1/4" X 18"	441129-5-18	1'6" M&H 5-1/4" 129 HYDRANT	EA	1	Citco Water	$973.47	10-15 DAYS
W	465	M&H EXTENSION KIT	5 1/4" X 24"	441129-5-24	2'0" HRPI 5-1/4 EXTENSION FOR M&H	EA	1	Citco Water	$545.07	10-15 DAYS

WATER	ITEM #	DESCRIPTION	SIZE	APPROVED PART #	ALTERNATE PART #	UNIT	EST. QTY. FY 26/27	BIDDER	UNIT PRICE	ESTIMATED DELIVERY TIME
		INSERT VALVE & SLEEVES								
W	480	INSERT VALVE & SLEEVE W/ INSTALLATION	6"	HYDRO-STOP INSTA-VALVE 250 PATROIT	ROMAC	EA	1	Citco Water	$ 114.27	10-15 DAYS
W	481	INSERT VALVE & SLEEVE W/ INSTALLATION	8"	HYDRO-STOP INSTA-VALVE 250 PATROIT	ROMAC	EA	1	Citco Water	$ 265.54	10-15 DAYS
W	482	INSERT VALVE & SLEEVE W/ INSTALLATION	10"	HYDRO-STOP INSTA-VALVE 250 PATROIT	ROMAC	EA	1	Citco Water	$ 407.50	10-15 DAYS
W	483	INSERT VALVE &SLEEVE W/ INSTALLATION	12"	HYDRO-STOP INSTA-VALVE 250 PATROIT	ROMAC	EA	1	Citco Water	NO BID	
W	484	INSERT VALVE & SLEEVE W/ INSTALLATION	16"	HYDRO-STOP INSTA-VALVE 250 PATROIT		EA	1	Citco Water	NO BID	

LEGAL NOTICE

INVITATION TO SUBMIT QUOTATIONS

The Town of Smyrna will accept quotations on the annual Gas, Water and Sewer materials for the Utilities Department. Bidders shall submit sealed quotations in the format specified in the Invitation to Submit Quotations no later than **2:00 p.m. May 19, 2026** at which time the bids will be publicly opened and read aloud. No bid may be withdrawn after the scheduled closing time for a period of 90 days. Bidding documents may be obtained at Smyrna Town Hall during regular business hours or www.townofsmyrna.org. Quotations should be mailed or hand delivered to:

Purchasing Department
Smyrna Town Hall
Sealed Bid on Annual Gas, Water & Sewer Materials
May 19 @ 2:00 p.m.
315 South Lowry Street
Smyrna, TN 37167

The Town of Smyrna will not discriminate in the purchase of all goods and services on the basis of race, color, religion, sex, national origin, age, disability or any other lawfully protected classification.

Verbal quotations, faxed quotations or quotations received after the closing date will not be accepted. The Town of Smyrna reserves the right to reject any and all bids, to waive technicalities or informalities and to accept any bid deemed to be in the best interest of the Town.

BY: Sierra Lowry
Finance Director

TO BE RUN: May 5, 2026

Consolidated Pipe & Supply Company Inc.

COMPANY NAME

TABLE OF CONTENTS

		PAGE
SECTION I -	GENERAL INFORMATION	3
SECTION II -	SPECIFICATIONS AND PRICE QUOTATION	5
	INSURANCE REQUIREMENTS	6
	AGREEMENT	10
SECTION III –	SPECIFICATION COMPLIANCE	16
	ATTACHMENT A	17

SPREADSHEETS & DRAWINGS

SECTION I – GENERAL INFORMATION

A. The Town of Smyrna desires to purchase annual gas, water and sewer materials for the Utilities Department for the fiscal year July 1, 2026 through June 30, 2027.

Location of Smyrna Town Hall:
315 South Lowry Street
Smyrna, TN 37167

Delivery Locations:
Gas: 108 G Street, Smyrna
Water & Sewer: 106 G Street, Smyrna
Call for delivery appointment.

B. Questions should be directed to Kevin Scott 615-479-4895. Email address: kevin.scott@townofsmyrna.org.

C. The Town of Smyrna reserves the right to reject any and all bids, to waive technicalities or informalities and to accept any bid deemed to be in the best interest of the Town. No bid may be withdrawn after the scheduled closing time for a period of 90 days.

D. The bidder shall abide by and comply with the true intent of the specifications and not take advantage of any unintentional error or omission, but shall fully address the full intent and meaning of each aspect of the specifications.

E. **Equals must be pre-approved by Kevin Scott prior to bid opening. All items to be ordered as needed**. Quantities are **estimated** on annual usage.

F. All materials in the bid documents have been placed into specific categories within each department. Each category shall be considered as a whole and not broken apart (See example in Attachment A).

G. Section II, III and contract Agreement shall be **completed** and **included** as an integral part of each bidder's proposal. Successful bidder will be expected to enter into a contract Agreement with the Town. Agreement shall be signed, but not dated, by the proper business representative and submitted **with** the bid proposal. An executed contract will be forwarded to winning vendor after Council approval.

H. Freight shall be paid by vendor and should be included in unit price bid.

I. The Town is a tax-exempt organization.

J. Mail is delivered after 11:00 a.m. Monday through Friday.

K. Bid quotations **must** be submitted on the Town's quotation page(s). No exceptions.

L. THIS ORDER WILL EXPIRE JUNE 30, 2027.

M. By submission of this bid, each bidder/proposer and each person signing on behalf of any bidder certifies, and in the case of a joint bid each party thereto certifies as to its own organization, under penalty of perjury, that to the best of its knowledge and belief that each bidder is not on the list created pursuant to T.C.A. § 12-12-106 Iran

Divestment Act. For reference purposes, the list is currently available online at: State of TN_Debarred_Vendors.pdf

SECTION II – SPECIFICATIONS AND PRICE QUOTATION

Base Bid Schedule

See Attached Spreadsheets

All materials have been placed into specific categories within each department. Each category shall be considered as a whole and not broken apart. An example of the format is included in Attachment A.

The Town of Smyrna has included a spreadsheet with this document. The spreadsheet has been included for bidding convenience. Each bidder is responsible for the information and mathematical accuracy. Please check and double check your bid prior to submitting.

ESTIMATED DELIVERY TIME MUST BE INCLUDED FOR ITEMS.

Compliance with laws:

The contractor must comply with all applicable federal and state law including the prevailing wage laws.

Contractor must provide adequate proof of insurance with the bid.

INSURANCE REQUIREMENTS

The Vendor shall purchase and maintain for the duration of the contract insurance against claims for injuries to persons or damages to property which may arise from or in connection with the performance of the work hereunder by the Vendor, its agents, representatives, employees or subcontractors.

A. MINIMUM SCOPE AND LIMITS OF INSURANCE

1. **Workers Compensation**
   Workers Compensation insurance shall be in compliance with the State of Tennessee and shall be statutory. Employers Liability shall be included with a minimum limit of $500,000 per accident/per disease/per employee.

2. **Commercial General Liability**
   Commercial General Liability insurance shall have a minimum limit per occurrence of $1,000,000 and a minimum general aggregate of $2,000,000. It shall include completed operations, product liability and personal injury liability insurance.

3. **Automobile Liability**
   Automobile Liability Insurance shall have a minimum combined single limit per occurrence of $1,000,000. This insurance shall include third-party bodily injury and property damage liability for owned, hired, borrowed and non-owned automobiles.

B. DEDUCTIBLES AND SELF-INSURED RETENTIONS

Any deductibles or self-insured retentions must be declared to the Town of Smyrna. The Vendor shall be responsible for all deductibles and self-insured retentions.

C. OTHER INSURANCE PROVISIONS

The policies are to contain, or be endorsed to contain, the following provisions:

1. General Liability and Automobile Liability Coverages
   a. The Town, its elected and appointed officials, agents, employees and volunteers shall be named as an additional insured as regards negligence by the vendor.

   b. The Vendor's insurance shall be primary as respects the Town, its elected and appointed officials, agents, employees and volunteers. Any insurance or

self-insurance maintained by the Town of Smyrna shall be excess and non-contributory of the Vendor's insurance.

2. Workers Compensation and Employers Liability Coverage

   The insurer shall agree to waive all rights of subrogation against the Town, its elected and appointed officials, agents, employees and volunteers for losses arising from work performed by the Vendor for the Town of Smyrna.

3. All Coverages

   a. Coverage shall not be canceled, suspended, or voided by either party (the Vendor or the insurer) or reduced in coverage or in limits except after 30 days written notice has been given to the Town of Smyrna. Ten-day written notice of cancellation is acceptable for non-payment of premium. Notifications shall comply with the standard cancellation provisions in the Vendor's policy.

   b. Neither the acceptance of the completed work nor the payment thereof shall release the Vendor from the obligations of the insurance requirements or indemnification agreement.
   c. The insurance companies issuing the policies shall have no recourse against the Town of Smyrna for payment of premiums or for assessments under any form of the policies.

   d. Replacement certificates, policies or endorsements shall be provided to the Town for any such insurance expiring prior to the completion of services.

   e. Any failure of the Vendor to comply with reporting provisions of the policy shall not affect coverage provided to the Town, its elected and appointed officials, agents, employees and volunteers.

D. ACCEPTABILITY OF INSURERS

All required insurance shall be provided by a company or companies licensed to conduct business in the State of Tennessee. Insurance shall be underwritten by insurers with an A.M. Best Company ratings no less than an A.

E. VERIFICATION OF COVERAGE

The Vendor shall furnish the Town with Certificates of Insurance reflecting proof of required coverage. The Certificates for each insurance policy are to be signed by a person authorized by that insurer to bind coverage on its behalf. **The Certificates are to be received and approved by the Town before work commences and upon any contract renewal thereafter.**

Upon failure of the Vendor to furnish, deliver and maintain such insurance as requested, this contract, at the election of the Town, may be suspended, discontinued or terminated. Failure of the Vendor to purchase and/or maintain any required insurance shall not relieve the Vendor from any liability or indemnification under the contract.

The Certificate of Insurance naming the "Town of Smyrna" as **Additional Insured** shall be addressed to the attention of:

Town of Smyrna
Department of Safety & Risk Management
ATTN: Henry Urbina
315 S Lowry St
Smyrna, TN 37167

It can also be submitted electronically to henry.urbina@townofsmyrna.org. The subject line has to indicate the name of the project.

The Town reserves the right to request complete certified copies of all required insurance policies at any time.

F. SUBCONTRACTORS

Vendor shall include all subcontractors as insureds under its policies **OR** shall be responsible for verifying and maintaining the Certificates provided by each subcontractor. Subcontractors shall be subject to all of the requirements stated herein. The Town of Smyrna reserves the right to request copies of subcontractor's Certificates at any time.

G. WORKERS' COMPENSATION INDEMNITY

In the event Vendor is not required to provide or is exempt from providing workers' compensation coverage, the parties hereby agree that Vendor, its owners, agents and employees will have no cause of action against, and will not assert a claim against the Town of Smyrna, its elected and appointed officials, agents, employees and volunteers, under any circumstances. The parties also hereby agree that the Town of Smyrna, its elected and appointed officials, agents, employees and volunteers shall in no circumstance be, or considered as, the employer or statutory employer of Vendor, its owners, agents and employees. The parties further agree that Vendor is a wholly independent vendor and is exclusively responsible for its employees, owners, and agents. Vendor hereby agrees to protect, defend, indemnify and hold the Town of Smyrna, its elected and appointed officials, agents, employees and volunteers harmless from any such assertion or claim that may arise from the performance of this contract.

HOLD HARMLESS AND INDEMNITY REQUIREMENT:

Vendor shall indemnify and hold harmless, to the maximum extent permitted by law, the Town of Smyrna and its officers, agents, employees, volunteers, from and against any and all liability, damages, losses, (whether in contract or in tort, including personal injury, accidental death or property damage, and regardless, of whether the allegations are false, fraudulent or groundless), and costs (including reasonable attorney's fees, litigation, arbitration, mediation, appeal expenses) which in whole or in part are caused by the negligence, recklessness or intentional wrongful misconduct of the Vendor and

persons employed by or utilized by the Vendor in Vendor's performance of this Agreement.

The vendor further agrees to protect, defend, and save the Town, its elected and appointed officials, agents, employees and volunteers while working in the scope of their duties as such, harmless from and against all claims, demands, and causes of action of any kind of character, including the cost of their defense, arising in favor of the vendor's employees or third parties on account of bodily or personal injuries, death or damage to property arising out of services performed or omissions of services or in any way resulting from the acts of omissions of the vendor and/or its agents, employees, subcontractors, representative of the Town under this agreement.

Pursuant to Tennessee Attorney General Opinion 93-01, the Town will not indemnify, defend or hold harmless in any fashion the Vendor from any claims arising from any failure, regardless of any language in any attachment or other document that the Vendor may provide.

APPLICABLE LAW:

Any contract resulting from this ISQ shall be governed by and construed under the laws of the State of Tennessee.

AGREEMENT

This Agreement is made and entered into as of this 19th day of May, 2026, by and between Consolidated Pipe & Supply Company Inc., a Wholesale Distributor (the "Bidder") and the Town of Smyrna, Tennessee, a Tennessee municipal corporation (the "Town") for the purpose of the sale of materials / goods to The Town of Smyrna.

WHEREAS, the Bidder has submitted a quotation for the provision of certain products and/or services to the Town, all in accordance with the terms of the Invitation to Submit Quotations attached hereto and incorporated herein by reference as if set forth at length verbatim as Exhibit A (the "ISQ"), and which Proposal from the Bidder is attached hereto and incorporated herein by reference as if set forth at length verbatim as Exhibit B (the "Quotation"); the ISQ and the Quotation, together with any and all ancillary documents thereto, shall be collectively referred to herein as the "Bid Documents"; and

WHEREAS, the Town now desires to accept the Bidder's quotation, in accordance with the terms set forth in such Bid Documents.

NOW, THEREFORE, in consideration of the mutual covenants contained herein, and for other good and valuable consideration, the receipt and sufficiency of which is hereby acknowledged, the undersigned do hereby agree as follows:

1. Acceptance of Bid Documents. The terms of the Bid Documents, as incorporated herein by reference, are hereby accepted by the parties hereto. The Bidder hereby agrees to provide the goods and/or services contemplated by such Bid Documents in accordance with the terms set forth therein. The Town hereby accepts the Bidder's quotation to provide the goods and/or services contemplated by such Bid Documents in accordance with the terms set forth therein.

2. Entire Agreement. This Agreement, including the exhibits and any other documents referred to herein or therein, which form a part hereof, contains the entire understanding of the parties with respect to its subject matter. There are no restrictions, agreements, promises, warranties, covenants or undertakings other than those expressly set forth herein or therein. This Agreement supersedes all prior written or oral agreements and understandings between the parties with respect to its subject matter and may not be altered, modified or amended, in whole or in part, except by the express written authorization and consent of the parties hereto.

3. Severability. This agreement constitutes the product of negotiations of the parties hereto and any enforcement of hereof will be interpreted in a neutral manner and not more strongly against any party based upon the source of the draftsmanship of this Agreement. If any provision of this Agreement shall be held invalid or unenforceable by a court of competent jurisdiction, the remaining provisions hereof shall continue to be fully effective.

4. Limitation of Liability. The Town of Smyrna shall not be liable for any loss, claim, expense or damage caused by, contributed to or arising out of the acts or omission of Bidder or third parties, whether negligent or otherwise.

5. Warranties. The Bidder warrants to the Town that all materials and equipment furnished under this Contract will be new unless otherwise specified, and that all work will be of good quality, free from faults and defects, suitable for the purpose for which the materials and equipment are furnished, and in conformance with the Agreement. If it does not perform as warranted, Bidder shall use all commercially reasonable efforts to correct the product(s) so that it operates in all material respects in conformity with the written representations of Bidder. If Bidder cannot correct the product(s) within a reasonable period of time, Bidder shall refund the purchase price of the product(s). All work not conforming to these requirements, including substitutions not properly approved and authorized, may be considered defective.

6. Software Deadline, Testing and Acceptance: If applicable to the Agreement, software provided by Bidder shall be installed for the purposes of testing, as stated herein below, no later than one hundred twenty (120) days from the effective date of this Agreement unless the parties, in writing, set a different specific date. In Addition, software provided by Bidder to The Town is subject to inspection and testing to verify that the software conforms to its written specifications and to ensure it meets The Town's needs. The Town shall have seven (7) business days after the software is installed to perform testing of the software using The Town's data. The Town shall provide Bidder with written notice of acceptance or rejection of the software five (5) business days or less after the end of the testing period. If the Town does not provide timely written notice of acceptance or rejection to Bidder, the software shall be deemed to be accepted by The Town. If the software is rejected, The Town may, at its sole discretion, either (1) return the software and receive a refund of all fees paid with respect thereto, or (2) allow Bidder to repair or replace the software, without charge, in a timely manner. In the event The Town elects to allow the Bidder to repair or replace the software, The Town shall have an additional (7) business days in which to accept or reject the software as laid out hereinabove.

7. Use of The Town's Logo or Name: Bidder shall not use The Town's name or any logo in marketing or publicity materials or for marketing or publicity purposes without the prior written authorization from The Town. Bidder shall not issue, publish, or divulge any materials developed or used in the performance of this Agreement or make any statement to the media relating to this Agreement without the prior written consent of The Town.

8. Indemnification. The parties hereto agree that Bidder shall indemnify The Town for any and all claims of negligence, tortious conduct or otherwise unlawful acts committed by Bidder in the performance of their obligations under the terms of this agreement, including any and all attachments or exhibits thereto and Bidder agrees to pay any and all costs associated with the enforcement of the terms of this indemnity agreement by The Town, including but not limited to, court costs, civil judgments, assessments or any other reasonable fees associated therewith. This clause shall survive the expiration or termination of this Agreement and shall remain in full force and effect until the expiration of any applicable statute of limitation. In addition, Article II, Section 29 of the Tennessee Constitution prohibits municipalities from lending their credit to private of public entities and, therefore, prohibits an agreement by The Town to indemnify a third party or agree to a limitation of liability provision.

9. Non-Appropriation: Bidder acknowledges that The Town is a governmental entity, and the validity of this Agreement is based upon the availability of public funding under its authority. In the event The Town fails to appropriate funds or make monies available for any fiscal year covered by the term of this Agreement for services to be provided, this Agreement shall be terminated on the last day of the fiscal year for which funds were appropriated or monies made available for such purposes without liability to The Town, and such termination shall not be a breach of the Agreement, and any unused payment made to Bidder shall be returned to The Town.

10. Tax Exemption: As a tax-exempt entity, The Town shall not be responsible for sales or use taxes incurred for products or services. The Town shall supply Bidder with its Sales and Use Tax Exemption Certificate upon Bidder's request. Bidder shall bear the burden of providing its suppliers with a copy of The Town's tax exemption certificate and Bidder shall assume all liability for such taxes, if any, that should be incurred.

11. Attorney Fees. The parties hereto agree that The Town shall be in no event liable for any attorney's fees which Bidder may incur due to breach of this Agreement by either party; and further, The Town shall not acquiesce to any term in any document that indicates or infers The Town may or shall be responsible for the Attorney's fees of another party or the Bidder's attorney fees.

12. Boycott of Israel. The Bidder certifies that it is not currently engaged in, and covenants that it will not, for the duration of the Contract, engage in a Boycott of Israel, as that term is defined in Tenn. Code Ann. § 12-4-119.

13. Failure to perform. The parties agree, in the event Bidder fails to perform any obligation, other than with regards to the date of delivery, set out in this Agreement, the Town shall be reimbursed by Bidder for any and all expenses associated with having to obtain a new provider to finish out the contracted term, including, but in no way limited to, any charges/fees, which are above and beyond the amount the Town would have paid to Bidder to complete the same task; provided, however, that if the failure, by its nature, is one that can be cured, the Bidder shall have fifteen (15) business days after receipt of written notice from the Town to cure said failure to perform. The parties hereby agree, unless a specific date of delivery is provided in this Agreement or other bid documents, all deliveries shall be made to the Town no later than ninety (90) days from the date of order. The parties further agree that if Bidder, in good faith, is not able to meet this ninety (90) day deadline of delivery due to forces beyond his, her or its control, that were unforeseeable at the time of signing this contract, then this entire Agreement shall be voidable at the sole discretion of the Town. Should the Town elect to void this Agreement due to Bidder's good faith inability, due to forces beyond his, her or its control, and which were unforeseeable at the time of signing this Agreement to meet the delivery deadline, then neither party shall be deemed to have breached this Agreement, and Bidder shall return all monies, within seven (7) business days, paid by the Town for the products/items that could not be delivered in the allotted time.

14. Unilateral Modification of Agreement Not Permitted: Bidder may make unilateral changes to its Privacy Policy, provided any such changes are subject to the provisions of this Agreement but shall not materially alter the use of the service or reduce the level of protection provided to the Town at the time of the execution of this Agreement. Except as provided in the preceding sentence, notwithstanding anything in this Agreement to the contrary, any change to this Agreement made by Bidder that is not in writing and that is not properly executed by the signatures of authorized representatives of the parties hereto, including attestation by The Town's Clerk and approved as to form by the Town Attorney are subject to the terms and conditions of this Agreement.

15. Changes to Terms: Except as provided in Paragraph No. 13 above pertaining to Bidder's Privacy Policy, Bidder shall provide The Town written notice, sent in care of Town Attorney's Office, Smyrna, Tennessee, 315 South Lowry Street, Tennessee 37167, of any proposed change to this Agreement at least ninety (90) days prior to being effective to The Town. The Town shall have thirty (30) days after receiving the written notice to terminate this Agreement, and such cancellation shall not be a breach of this Agreement. Bidder will refund to The Town any payment made by The Town to Bidder equal to the difference between the number of months the payment was intended for and the number of months remaining on this Agreement that the fee was intended to cover.

16. Price Assurance: Unless specifically stated in this Agreement or other bid documents, the bid price shall be valid for the full term of this Agreement. If the Bidder, specifically states that he, she or it cannot honor the bid price for the full term of this Agreement; then this Agreement is voidable at the sole discretion of the Town, if at any time during the full term of this Agreement, Bidder requests to raise the bid

price. If the Town elects to void this Agreement, at its sole discretion, it shall not be deemed to be a breach of the contract by either party.

17. Confidentiality. The Town, as a Tennessee Municipal Corporation is subject to the Tennessee Open Records Act, set out in T.C.A. §10-7-503 et seq; therefore, this Agreement and all documents or materials, in any format, including, but not limited to paper, electronic or virtual, that are public records pursuant to law, are not confidential and are subject to disclosure. The Town will respond to all proper Open Records Requests in the time allowed by law, without any requirement to disclose such request to Bidder or provide Bidder with notice or the time to obtain a protective order. The Town does not have the burden of establishing that information is not confidential information or that its release is authorized to release the records. This section 16 serves to meet such burden and authorization of disclosure.

18. Mediation. The Town may, at its option, require the attempted resolution of any dispute arising under this Agreement by mediation prior to the filing of any lawsuit or other claim. Should any dispute arise, Bidder shall provide the Town notice of any intent to file suit by certified mail. The Town shall notify the Bidder of its intent to exercise its right to mediation within thirty (30) days of receiving such notice. If the Town does not exercise its right to mediation, Bidder may file suit. Any mediator selected under this clause shall be agreed upon by the parties and the costs of such mediation shall be divided and paid equally between the parties.

19. No Presumption Against Drafter: The parties are both business entities having substantial experience with the subject matter of this Agreement, and each has fully participated in the negotiation and drafting of this Agreement. Accordingly, this Agreement shall be construed without regard to the rule that ambiguities in a document are to be construed against the draftsman. No inferences shall be drawn from the fact that the final, duly executed Agreement differs in any respect from any previous draft hereof.

20. Governing Law. This Agreement shall be deemed to have been executed and delivered within the State of Tennessee, and the rights and obligations of the parties shall be construed and enforced in accordance with, and governed by, the laws of the State of Tennessee. The parties agree that all obligations of the parties are performable in Smyrna, Tennessee.

21. Choice of Forum and Venue. The parties' choice of forum and venue shall be exclusively in the courts of Rutherford County, Tennessee or the United States District Court, for the Middle District of Tennessee. The parties hereby waive their right to a jury trial. Any provision of the Agreement held to violate a law or regulation shall be deemed void, and all remaining provisions shall continue in force.

IN WITNESS WHEREOF, the undersigned have executed this Agreement as of the date set forth above.

TOWN OF SMYRNA, TENNESSEE

By: _____
Name: Mary Esther Reed
Title: Mayor

ATTEST:

_____
Amber Hobbs, Town Clerk

BIDDER:

By: Kevin Pulley Kevin Pulley
Title: Outside Sales

ATTEST:

Patrick Macchiaverna Operations Manager

SECTION III - SPECIFICATIONS COMPLIANCE

Unless otherwise noted, all quotations for the annual gas, water and sewer materials shall be in complete accordance with the specifications detailed herein.

Bidders shall note in the space provided below any exceptions or deviations in any way from the specifications of any section of this ISQ. Bidders should provide complete detail of exceptions or deviations.

Proposal Exceptions

Section	Brief Description

By signature below, vendor acknowledges any quotation to be in full compliance with all aspects of each section of the ISQ not noted above. The undersigned hereby declares that no person or party other than the undersigned has any interest whatever in this proposal, that it is without any connection or collusion with any person or persons making or having made any proposal for the same work and without any previous understanding with such person or persons as to relative prices, obviating competition, and that it is made in good faith.

Consolidated Pipe & Supply Company Inc.	O. 615-242-4286 C. 615-417-1017
COMPANY	TELEPHONE NUMBER
Kevin Pulley	Outside Sales Represenative
REPRESENTATIVE NAME	REPRESENTATIVE TITLE
SIGNATURE	kevin.pulley@cpspipe.com
	E-MAIL ADDRESS

Attachment A

Cutoffs							
	Estimated	Vendor A		Vendor B		Vendor C	
DESCRIPTION	Bid Qty	Unit Price	Cost	Unit Price	Cost	Unit Price	Cost
3/4" STOPCOCK; JOMAR 241-004B	150	$12.00	$1,800.00	$9.00	$1,350.00	$1.00	$150.00
3/4" STOPCOCK, HIGH PRESSURE, MUELLER	20	$18.00	$360.00	$17.00	$340.00	$2.00	$40.00
1" STOPCOCK; JOMAR 241-005B	30	$13.75	$412.50	$13.00	$390.00	$3.00	$90.00
1 1/4" STOPCOCK; 175 MAOP MUELLER	10	$14.50	$145.00	$16.00	$160.00	$4.00	$40.00
1 1/2" STOPCOCK; 175 MAOP MUELLER	10	$15.00	$150.00	$14.00	$140.00	No Bid	$0.00
2" STOPCOCK; 175 MAOP MUELLER	30	$16.00	$480.00	$20.00	$600.00	$6.00	$180.00
	Totals		$3,347.50		$2,980.00		$500.00
	Low Bidder						
	Incomplete Bid						

Category Calculation Guidelines:

1. Multiply estimated quantity times bid unit price for cost of each category item
2. Add costs in category for each vendor to obtain category total cost per vendor
3. Any unit price omitted from category will result in incomplete bid for given category
4. Low bidder, meeting all other requirements, shall be awarded the entire category

WATER MATERIALS BID LIST 2025-2026

WATER	ITEM #	DESCRIPTION	SIZE	APPROVED PART #	ALTERNATE PART #	UNIT	EST. QTY. FY 26/27	BIDDER	UNIT PRICE	ESTIMATED DELIVERY TIME
		METER YOKES/ACCESSORIES								
W	1	METER RETROSETTER W/ 360° LOCKWING & DC; MUELLER (FORD ALTERNATE)	5/8" X 3/4"	203B2446-R5---N	RETRO-2CVBRHH-NL	EA	10			
W	2	METER RISER; RELOCATOR W/ 360° LOCKWING & DC; MUELLER (FORD ALTERNATE)	5/8" X 3/4" X 7"	234B24118R5---N	VBHH42-7WR-NL	EA	200			
W	3	METER RISER; RELOCATOR W/ 360° LOCKWING & DC; MUELLER (FORD ALTERNATE)	5/8" X 3/4" X 12"	238B24118R5---N	VBHH42-12-NL	EA	10			
W	4	METER RISER RELOCATOR W/ 360° LOCKWING & DC; MUELLER (FORD ALTERNATE)	1" X 10"	389B24118R5---N	VBHH44-10-NL	EA	80			
W	5	METER RISER; RELOCATOR W/ 360° LOCKWING & DC; MUELLER (FORD ALTERNATE)	1.5" X 14"	063B2424--5N	VBRHH46-14-NL	EA	5			
W	6	METER RISER; RELOCATOR W/ 360° LOCKWING & DC; MUELLER (FORD ALTERNATE)	2" X 14"	087B2424--5N	VBRHH47-14-NL	EA	10			
W	7	METER RISER; RELOCATOR W/360° LOCKWING & DC; FORD W/BYPASS	2" X 14"	1-VBHH47-14B-NL	n/a	EA	2			
W	9	METER SWIVEL 2.5L; FORD	5/8" X 3/4" X 3/4"x 2.5" LONG	C38-23-2.5-NL	MUELLER H-10890N	EA	200			
W	10	METER SWIVEL COUPLING ; FORD	5/8" x 3/4" x 3/4" x 2.25" LONG	C38-23-2.25-NL	MUELLER H-1089002(	EA	5			
W	11	METER SWIVEL COUPLING STRAIGHT; FORD	1"	C38-44-2-625-NL	MUELLER H-10890	EA	80			
W	12	FLANGE PAK FOR METER - BRASS (BOX W/2)	1.5"	4415FSC	or equal	EA	8			
W	13	FLANGE PAK FOR METER - BRASS (BOX W/ 2)	2"	4420FSC	or equal	EA	10			
W	14	A-24 METER ADAPTOR; FORD	5/8" x 3/4" to 1"	A24-NL	or equal	EA	120			
W	15	A-47 FLANGED METER ADAPTOR; FORD (BOX W/ 2)	1" TO 2"	A47-NL	or equal	EA	5			
W	16	A-67 FLANGED METER ADAPTOR; FORD (BOX W/2)	1.5" TO 2"	A67-NL	or equal	EA	5			

WATER	ITEM #	DESCRIPTION	SIZE	APPROVED PART #	ALTERNATE PART #	UNIT	EST. QTY. FY 26/27	BIDDER	UNIT PRICE	ESTIMATED DELIVERY TIME
		WATER REGULATORS								
W	17	REGULATOR; WATTS	3/4"	LF25AUB-Z3		EA	4			
W	18	REGULATOR; WATTS	1"	1LF25AUB-Z3		EA	4			
W	19	REGULATOR; ZURN WILKINS	3/4"	MODEL 70XL		EA	2			

WATER	ITEM #	DESCRIPTION	SIZE	APPROVED PART #	ALTERNATE PART #	UNIT	EST. QTY. FY 26/27	BIDDER	UNIT PRICE	ESTIMATED DELIVERY TIME
		WATER MOUDLE								
W	21	ITRON UNIVERSAL MOUDLE W/ LID MOUNTING KIT	UNIVERSAL	ERW-1350-001 100W+/CFG-1601-001	n/a	EA	275			
W	22	ITRON UNIVERSAL LEAK SENSOR	UNIVERSAL	LDS-1601-001	n/a	EA	10			
W	23	CELLULAR 500W MODULE W/ LID MOUNTING KIT	UNIVERSAL	ECW-1700-001/CFG-1601-001	n/a	EA	100			

WATER	ITEM #	DESCRIPTION	SIZE	APPROVED PART #	ALTERNATE PART #	UNIT	EST. QTY. FY 26/27	BIDDER	UNIT PRICE	ESTIMATED DELIVERY TIME
		METERS AND PARTS								
W	24	METER CIB/HRE/USG W/ ITRON CONNECTOR; BADGER	5/8" X 3/4"	MODEL 25LL (NSF 61-G MTR)	n/a	EA	200			
W	25	METER CIB/HRE/USG W/ ITRON CONNECTOR; BADGER	1"	MODEL 70 LL (NSF 61-G MTR)	n/a	EA	80			
W	26	METER CIB/HRE/USG W/ ITRON CONNECTOR; BADGER	1.5	MODEL 120 LL (NSF 61-G-MTR)	n/a	EA	4			
W	27	METER ELLIPTICALW/T. PLUG HRE/USG W/ ITRON CONNECTOR W/ D. P.; BADGER	2"	MODEL 170 LL (NSF 61- G-MTR)	n/a	EA	6			
W	28	METER BOTTOMS FOR BADGER METER; BADGER	5/8" X 3/4"	57799 - 001	n/a	EA	25			
W	29	METER BOTTOMS FOR BADGER METER	1"	59293 - 002	n/a	EA	10			
W	37	CHAMBER for M70 BADGER METER	1"	33334-032	n/a	EA	5			
W	38	CHAMBER for M120 BADGER METER	1.5"	33334-017	n/a	EA	5			
W	39	CHAMBER forM170 BADGER METER	2"	33334-028	n/a	EA	5			
W	40	RETROFIT REGISTER w/ ITRON CONNECTOR; BADGER	5/8" X 3/4"	M25/RETRO/RT	n/a	EA	400			
W	41	RETROFIT REGISTER w/ ITRON CONNECTOR; BADGER	1"	M70/RETRO/RT	n/a	EA	6			
W	42	RETROFIT REGISTER w/ ITRON CONNECTOR; BADGER	1.5"	M120/RETRO/RT	n/a	EA	2			
W	43	RETROFIT REGISTER w/ ITRON CONNECTOR; BADGER	2"	M170/RETRO/RT	n/a	EA	4			

WATER	ITEM #	DESCRIPTION	SIZE	APPROVED PART #	ALTERNATE PART #	UNIT	EST. QTY. FY 26/27	BIDDER	UNIT PRICE	ESTIMATED DELIVERY TIME
		ULTRASONIC METERS AND PARTS								
W	44	NEPTUNE METER W/ 5' ITRON CONNECTOR in 100 USG	2" x 17"	EU2E1G1SG61		EA	4			
W	45	NEPTUNE METER W/ 25' ITRON CONNECTOR in 100 USG W/ FLANGE PAKS	3"X 12"	EU3A1G1SG61		EA	2			
W	46	NEPTUNE METER W/ 25' ITRON CONNECTOR in 100 USG W/ FLANGE PAKS	4" X 14"	EU3C1G1SG61		EA	2			
W	47	NEPTUNE METER W/ 25' ITRON CONNECTOR in 100 USG W/ FLANGE PAKS	6" X 18"	EU3E1G1SG61		EA	3			

WATER	ITEM #	DESCRIPTION	SIZE	APPROVED PART #	ALTERNATE PART #	UNIT	EST. QTY. FY 26/27	BIDDER	UNIT PRICE	ESTIMATED DELIVERY TIME

WATER MATERIALS BID LIST 2025-2026

		METER BOXES AND LIDS								
W	48	SIGMA RMB-132418-SW W/ LC1324T-D READ DOOR AND RECESS TOUCH READ HOLE	5/8" x 3/4" meters	RMB- 132418-SW	ASTLE 1324X18 /DI65	EA	50			
W	49	SIGMA RMB-173018-SW W/ LC1730T-D READ DOOR AND RECESS TOUCH READ HOLE	1" - 2" meters	RMB- 173018-SW	ASTLE 1730X18/DI65	EA	25			
W	50	SIGMA LID ONLY LC1324T-D READ DOOR AND RECESS TOUCH READ HOLE	5/8" x 3/4" meters	RMB-1324-L-RT	45-12 W/ READ DOOR /	EA	10			
W	51	SIGMA LID ONLY LC1730T-D READ DOOR AND RECESS TOUCH READ HOLE	1" - 2" meters	RMB-1730-L-RT	645-12 W/ READ DOOR /	EA	10			
W	55	CI SOLID METER BOX LID W/ ITRON TR HOLE FOR BROOKS 36H15 METER BOX LID ONLY	CI SOLID LID FOR BROOKS 36HI5	LC 223T ITRON	n/a	EA	25			
		***1324 AND 1730 BOXES SHALL COME W/LID READER DOOR AND RECESS TOUCH READ HOLE**		LC1324T-D/1730T-D	w/ read door /trans hole 1324/1730					
WATER	**ITEM #**	**DESCRIPTION**	**SIZE**	**APPROVED PART #**	**ALTERNATE PART #**	**UNIT**	**EST. QTY. FY 26/27**	**BIDDER**	**UNIT PRICE**	**ESTIMATED DELIVERY TIME**
		VAULTS								
W	56	METER VAULT W/ ALUMINUM LID	2" METER VAULT	SEE DRAWING			2			
WATER	**ITEM #**	**DESCRIPTION**	**SIZE**	**APPROVED PART #**	**ALTERNATE PART #**	**UNIT**	**EST. QTY. FY 26/27**	**BIDDER**	**UNIT PRICE**	**ESTIMATED DELIVERY TIME**
		BRASS FITTINGS								
W	59	BRASS REDUCTION COUPLING	2" X 1.5"	B-RC0807		EA	2			
W	60	ROUGH BRASS 45° COUPLING	1.5"	BR4L		EA	2			
W	61	ROUGH BRASS 90° COUPLING	1.5"	BR9L		EA	2			
W	64	FEMALE THREAD BALL VALVE; FORD	3/4"	B11-233W-NL		EA	10			
W	65	BRASS TEE	2"x2"x2"	NSF61-4		EA	10			
W	66	BRASS THREADED 90°; MATCO	2"	NSF61-4		EA	10			
W	67	BRASS THREADED STREET 90°; MATCO	2"	NSF61-4		EA	10			
W	68	THREADED COUPLING; MATCO	2"	NSF61-4		EA	10			
W	69	BRASS ALL-THREAD	1.5"			EA	2			
W	70	BRASS NIPPLE	1.5" X 6"	BRNLU		EA	2			
W	71	BRASS ALL THREAD; MATCO--NORCA	2"	NBR08CL		EA	20			
W	72	BRASS NIPPLE; MATCO-NORCA	2" X 6" LONG	NBR086		EA	10			
W	73	BRASS NIPPLE; BMI	2" X 12" LONG	7 77701049941		EA	10			
W	74	BRASS NIPPLE	2" X 18" LONG			EA	6			
W	75	BRASS NIPPLE	2" X 24" LONG			EA	6			
W	76	CHECK VALVE; RED & WHITE	1.5"	236AB 1 1/2		EA	4			
W	77	CHECK VALVE; RED & WHITE	2"	236AB 2		EA	4			
W	78	APOLLO BALL VALVE	2"	A94ALF10801A		EA	6			
WATER	**ITEM #**	**DESCRIPTION**	**SIZE**	**APPROVED PART #**	**ALTERNATE PART #**	**UNIT**	**EST. QTY. FY 26/27**	**BIDDER**	**UNIT PRICE**	**ESTIMATED DELIVERY TIME**
		COMPRESSION FITTINGS								
W	82	COUPLING; FMLIP; FORD	FMLIP 3/4" X 3/4" CTS	C14-33-Q-NL		EA	5			
W	83	COUPLING; FORD	3/4" CTS X 3/4" CTS	C44-33-Q-NL		EA	30			
W	84	COUPLING; FORD	3/4" CTS PAK X 3/4" IP MALE	C84-33-Q-NL		EA	5			
W	85	COUPLING; FORD	3/4" CTS PACK X 1" CTS PACK	C44-34-Q-NL		EA	30			
W	86	COUPLING; FMLIP; FORD	FMLIP 1" X 1" CTS	C14-44-Q-NL		EA	15			
W	87	COUPLING; FORD	1" CTS X 1" CTS	C44-44-Q-NL		EA	25			
W	88	COUPLING; FORD	1" CTS X 1" I.P. MALE	C84-44-Q-NL		EA	6			
W	89	COUPLING; FORD	2" CTS X 2" CTS JOINT PK	C44-77-Q-NL		EA	6			
W	90	2" CTS X 2" IRON PIPE THREAD; FORD	2" CTS X 2" IRON PIPE THREAD	C84-77-Q-NL		EA	6			
W	91	COUPLING; T'S ; FORD	3/4" X 3/4" X 3/4" CTS	T444-333-Q-NL		EA	20			
W	92	COUPLING; T'S ; FORD	3/4" X 3/4" X 1" CTS	T444-443-Q-NL		EA	10			
W	93	COUPLING; T'S; FORD	1" X 1" X 3/4"	T444-443-AWT-Q-NL		EA	5			
W	94	COUPLING; T'S; FORD	1" X 1" X 1" CTS PAK JOINT	T444-444-Q-NL		EA	5			
W	95	BALL VALVE; FORD	3/4"	B44-233W-Q-NL		EA	20			
W	96	BALL VALVE; FORD	1"	B44-344W-Q-NL		EA	20			
W	97	COUPLING; "Y"; FORD	3/4" X 3/4" X 1" CTS	Y44-243-Q-NL		EA	25			
W	98	90° COUPLING; FORD	3/4"	L44-33-Q-NL		EA	5			
W	99	90° COUPLING; FORD	1"	L44-44-Q-NL		EA	5			
W	100	Q -NUT ASSEMBLY	3/4"	QJN4-3		EA	20			
W	101	Q-NUT ASSEMBLY	1"	QJN4-4		EA	20			
W	102	FEMALE COPPER THREAD GRIP JOINT; FORD	3/4" X 3/4" CTS	C04-33-Q-NL		EA	5			
W	103	FEMALE COPPER THREAD GRIP JOINT; FORD	1" X 1" CTS	C04-44-Q-NL		EA	5			
W	104	PAK J ASSEMBLY; FORD	1" FEMALE X 3/4" CTS	C08-43-NL		EA	5			
W	105	COUPLING SWIVEL 45 DEGREE; FORD	3/4"X3/4"	LA04-33S-Q-NL		EA	5			
W	106	COUPLING SWIVEL 45 DEGREE; FORD	1"X1"	LAO4-44S-Q-NL		EA	5			
W	107	COUPLING SWIVEL 90 DEGREE; FORD	3/4"X3/4"	L04-33S-Q-NL		EA	5			

W	108	COUPLING SWIVEL 90 DEGREE; FORD	1"X1"	L04-44S-Q-NL		EA	5			
W	109	MULTI SERVICE Y NL 1-2" FMLIP X 4-1" FMLIP	2"X1"	Y11-474-NL		EA	5			
WATER	**ITEM #**	**DESCRIPTION**	**SIZE**	**APPROVED PART #**	**ALTERNATE PART #**	**UNIT**	**EST. QTY. FY 26/27**	**BIDDER**	**UNIT PRICE**	**ESTIMATED DELIVERY TIME**
		CURB STOPS								
W	113	CURB STOP W/360 DEGREE LOCKING WINGNUT; FORD	3/4"	B43-232WR-Q-NL		EA	200			
W	114	CURB STOP W/360 DEGREE LOCKING WINGNUT; FORD	1"	B43-344WR-Q-NL		EA	25			
W	115	BALL VALVE PAD WING/CURB STOP; FORD	1.5"	BF13-666W-NL		EA	4			
W	116	BALL VALVE PAD WING/CURB STOP; FORD	2"	BF13-777W-NL		EA	4			
W	117	BALL VALVE PAD WING W/COMPRESSION FITTING; FORD	2"	BF43-777W-Q-NL		EA	6			
WATER	**ITEM #**	**DESCRIPTION**	**SIZE**	**APPROVED PART #**	**ALTERNATE PART #**	**UNIT**	**EST. QTY. FY 26/27**	**BIDDER**	**UNIT PRICE**	**ESTIMATED DELIVERY TIME**
		CORP STOPS								
W	122	CORPORATION STOP; FORD	3/4" TAPER X 3/4" CTS	FB1000-3-Q-NL		EA	10			
W	123	CORPORATION STOP; FORD	1" CC TAPER x 1"CTS	FB1000-4-Q-NL		EA	20			
W	124	CORPORATION STOP, IRON PIPE THREADS; FORD	1" IP THREAD X1" CTS	FB1100-4-Q-NL		EA	5			
WATER	**ITEM #**	**DESCRIPTION**	**SIZE**	**APPROVED PART #**	**ALTERNATE PART #**	**UNIT**	**EST. QTY. FY 26/27**	**BIDDER**	**UNIT PRICE**	**ESTIMATED DELIVERY TIME**
		TAPPING SADDLES								
W	143	TAPPING SADDLE; SMITH BLAIR	2" X 3/4" (2.35-2.56)	315-00025607-000		EA	5			
W	144	TAPPING SADDLE; SMITH BLAIR	2" X 1" (2.35-2.56)	315-00025609-000		EA	4			
W	145	TAPPING SADDLE; SMITH BLAIR	2-1/4" X 3/4" (2.44-2.91)	315-00029107-000		EA	5			
W	146	TAPPING SADDLE; SMITH BLAIR	2-1/4" X 1" (2.44-2.91)	315-00029109-000		EA	5			
W	149	TAPPING SADDLE; SMITH BLAIR	4" X 3/4" (4.40-4.80)	315-00048007-000		EA	4			
W	151	TAPPING SADDLE; SMITH BLAIR	4" X 1" (4.40-4.80)	315-00048009-000		EA	4			
W	155	TAPPING SADDLE; SMITH BLAIR	4" X 2" (4.40-4.80)	315-00048014-000		EA	4			
W	158	TAPPING SADDLE; SMITH BLAIR	6" X 3/4" (6.84-7.60)	315-00076007-000		EA	5			
W	160	TAPPING SADDLE ; SMITH BLAIR	6" X 1" (5.94-6.90)	315-00069009-000		EA	5			
W	161	TAPPING SADDLE; SMITH BLAIR	6" X 1" (6.84-7.60)	315-00076009-000		EA	5			
W	163	TAPPING SADDLE; SMITH BLAIR	6" X 2" (5.94-6.90)	315-00069014-000		EA	5			
W	165	TAPPING SADDLE ; SMITH BLAIR	6"x2" (6.84-7.60)	315-00076014-000		EA	5			
W	166	TAPPING SADDLE ; SMITH BLAIR	8" X 3/4" (8.54-10.10)	315-00101007-000		EA	5			
W	167	TAPPING SADDLE; SMITH BLAIR	8" X 1" (8.54-10.10)	315-00101009-000		EA	4			
W	171	TAPPING SADDLE; SMITH BLAIR	8" X 2" (8.54-10.10)	315-00101014-000		EA	2			
W	175	TAPPING SADDLE; SMITH BLAIR	10" X 2" (10.64-12.12)	315-00121214-00		EA	4			
W	176	TAPPING SADDLE; SMITH BLAIR	12" X 3/4" (12.64-14.32)	315-00143207-000		EA	2			
W	178	TAPPING SADDLE; SMITH BLAIR	12" X 1" (12.62-14.32)	315-00143209-000		EA	2			
W	180	TAPPING SADDLE; SMITH BLAIR	12"-14"X 2" (12.62-14.32)	315-00143214-000		EA	2			
W	181	TAPPING SADDLE; SMITH BLAIR	16"- X 2" (17.25-17.80)	317-00178014-000		EA	2			
W	182	TAPPING SADDLE; SMITH BLAIR	16"- X 2" (17.25-17.80)	317-00195014-000		EA	2			
W	183	TAPPING SADDLE:SMITH BLAIR	20"X2" (21.55-21.65)	317-00216014-000		EA	2			
W	184	TAPPING SADDLE; SMITH BLAIR	24" X 2" (25.75-25.85)	317-00258014-000		EA	2			
WATER	**ITEM #**	**DESCRIPTION**	**SIZE**	**APPROVED PART #**	**ALTERNATE PART #**	**UNIT**	**EST. QTY. FY 26/27**	**BIDDER**	**UNIT PRICE**	**ESTIMATED DELIVERY TIME**
		REPAIR CLAMPS								
W	188	REPAIR CLAMP; SMITH BLAIR	3/4" X 6" FL CIR			EA	2			
W	189	REPAIR CLAMP; SMITH BLAIR	1" X 6" FL CIR (PVC)	244-00013206-000		EA	2			
W	190	REPAIR CLAMP; SMITH BLAIR	1-1/4" X 6"	244-00016609-000		EA	4			
W	191	REPAIR CLAMP; SMITH BLAIR	1.5" X 6" FL CIR (PVC)	244-00019006-000		EA	4			
W	192	REPAIR CLAMP; SMITH BLAIR	2" X 7" FL CIR (2.35-2.63)	226-00023807-000		EA	8			
W	193	REPAIR CLAMP; SMITH BLAIR	2.5" X 7" FL CIR (2.70-3.00)	226-00027507-000		EA	6			
W	194	REPAIR CLAMP; SMITH BLAIR	2" X 12.5" FL CIR (2.35-2.63)	226-00023812-000		EA	2			
W	195	REPAIR CLAMP; SMITH BLAIR	2.5" X 12" FL CIR (2.70-3.00)	226-00027512-000		EA	2			
W	196	REPAIR CLAMP; SMITH BLAIR	2" X 15" (2.35-2.63)	226-00023815-000		EA	2			
W	197	REPAIR CLAMP; SMITH BLAIR	2" X 25" (2.35-2.63)	226-00023825-000		EA	2			
W	198	REPAIR CLAMP; SMITH BLAIR	2.25" X 25" (2.70-3.00)	226-00027525-000		EA	2			
W	199	REPAIR CLAMP; SMITH BLAIR	3" X 7.5" FL CIR (3.73-4.00)	226-00037507-000		EA	2			
W	200	REPAIR CLAMP; SMITH BLAIR	3" X 12" FL CIR (3.46-3.70)	226-00035012-000		EA	2			
W	201	REPAIR CLAMP; SMITH BLAIR	4" X 7.5" FL CIR (3.96-4.25)	226-00040007-000		EA	2			
W	202	REPAIR CLAMP; SMITH BLAIR	4" X 7.5" FL CIR (4.45-4.73)	226-00045007-000		EA	2			

W	203	REPAIR CLAMP; SMITH BLAIR	4" X 7.5" FL CIR (4.74-5.14)	226-00048007-000		EA	6		
W	204	REPAIR CLAMP; SMITH BLAIR	4 X 12.5" FL CIR (4.74-5.14)	226-00048012-000		EA	2		
W	205	REPAIR CLAMP; SMITH BLAIR	4 X 15" FL CIR (PVC) (4.74-5.14)	226-00048015-000		EA	2		
W	207	REPAIR CLAMP; SMITH BLAIR	6" X 7" FL CIR (6.84-7.24)	226-00069007-000		EA	10		
W	208	REPAIR CLAMP; SMITH BLAIR	6" X 7.5" FL CIR (6.56-6.96)	226-00066307-000		EA	4		
W	210	REPAIR CLAMP; SMITH BLAIR	6" X 12" FL CIR (6.56-6.96)	226-00066312-000		EA	2		
W	211	REPAIR CLAMP; SMITH BLAIR	6" X 12" FL CIR (6.84-7.24)	226-00069012-000		EA	4		
W	212	REPAIR CLAMP; SMITH BLAIR	6" X 12.5" (7.05-7.45)	226-00071012-000		EA	2		
W	213	REPAIR CLAMP; SMITH BLAIR	6" X 15" FL CIR (6.56-6.96)	226-00066315-000		EA	2		
W	214	REPAIR CLAMP; SMITH BLAIR	6" X 15" (6.84-7.24)	226-00069015-000		EA	2		
W	215	REPAIR CLAMP; SMITH BLAIR	6" X 15" (7.05-7.45)	226-00071015-000		EA	2		
W	217	REPAIR CLAMP; SMITH BLAIR	8" X 7" FL CIR (8.54-8.94)	226-00086307-000		EA	4		
W	218	REPAIR CLAMP; SMITH BLAIR	8" X 7" FL CIR (8.99-9.39)	226-00090507-000		EA	8		
W	219	REPAIR CLAMP; SMITH BLAIR	8" X 12" FL CIR (8.99-9.39, DIP)	226-00090512-000		EA	2		
W	220	REPAIR CLAMP; SMITH BLAIR	8" X 15" (8.54-8.94)	226-00086315-000		EA	2		
W	221	REPAIR CLAMP; SMITH BLAIR	8" X 15" (8.99-9.39)	226-00090515-000		EA	2		
W	222	REPAIR CLAMP; SMITH BLAIR	10" X 15" FL CIR (DIP) (11.04-11.44)	226-00111015-000		EA	2		
W	223	REPAIR CLAMP; SMITH BLAIR	10" X 20" (11.04-11.44)	226-00114020-000		EA	2		
W	224	REPAIR CLAMP; SMITH BLAIR	12" X 7" FL CIR (13.10-13.50)	226-00132007-000		EA	2		
W	225	REPAIR CLAMP; SMITH BLAIR	12" X 12" FL CIR (DIP) (13.10-13.50)	226-00132012-000		EA	2		
W	226	REPAIR CLAMP; SMITH BLAIR	12' X 15' FL CIR (DIP) (13.10 - 13.50)	226-00132015-000		EA	2		
W	227	REPAIR CLAMP; SMITH BLAIR	16" X 15" (17.15-17.90)	228-20171515-000		EA	2		
W	229	REPAIR CLAMP; SMITH BLAIR	16" X 20" FL CIR (17.15-17.90)	228-20178220-000		EA	2		
W	230	REPAIR CLAMP; SMITH BLAIR	16" X 30" (17.15-17.90)	228-20171530-000		EA	2		
W	231	REPAIR CLAMP; SMITH BLAIR	18" X 20" FL CIR (19.23-19.98)	228-20192320-000		EA	2		
W	232	REPAIR CLAMP; SMITH BLAIR	20" X 20" (21.52-22.27)	228-20215220-000		EA	2		
W	233	REPAIR CLAMP; SMITH BLAIR	24" X 30" FL CIR (25.70-26.80)	228-30257030-000		EA	2		
W	234	REPAIR CLAMP; SMITH BLAIR	24" X 20" FL CIR (25.70-26.80)	228-30257020-000		EA	2		
W	237	REPAIR CLAMP; SMITH BLAIR W/1" CC TAP	6"X7.5" W/1" TAP (6.84-7.24)	238-00069007-009		EA	2		
W	238	REPAIR CLAMP; SMITH BLAIR W/1" CC TAP	8"X7.5" W/ 1" TAP (8.99-9.39)	238-00090507-009					

WATER	ITEM #	DESCRIPTION	SIZE	APPROVED PART #	ALTERNATE PART #	UNIT	EST. QTY. FY 26/27	BIDDER	UNIT PRICE	ESTIMATED DELIVERY TIME
		HYMAX								
W	240	HYMAX; KRAUSZ	1.5" (1.61-2.13)	860-56-0041-16		EA	4			
W	241	HYMAX; KRAUSZ	2" (2.10-3.03)	860-56-0054-16		EA	4			
W	242	HYMAX; KRAUSZ	3" (3.46-4.33)	860-56-0088-16		EA	4			
W	243	HYMAX; KRAUSZ	4" (4.25-5.63)	860-56-0108-16C		EA	4			
W	244	HYMAX; KRAUSZ	6" (6.42-7.68)	860-56-0163-16		EA	10			
W	245	HYMAX; KRAUSZ	8" (8.54-9.84)	860-56-0217-16		EA	10			
W	246	HYMAX; KRAUSZ	10" (10.70 - 12.00)	860-56-0272-16		EA	2			
W	247	HYMAX; KRAUSZ	12" (12.40-13.66)	860-56-0315-16		EA	2			

WATER	ITEM #	DESCRIPTION	SIZE	APPROVED PART #	ALTERNATE PART #	UNIT	EST. QTY. FY 26/27	BIDDER	UNIT PRICE	ESTIMATED DELIVERY TIME
		PIPE								
W	254	PEX PIPE; REHAU 300 ft. Roll	3/4"	261056-100	n/a	FT	2000			
W	255	PEX PIPE; REHAU 300 ft. roll	1"	261076-300	n/a	FT	4000			
W	256	PEX PIPE; REHAU 300 ft. roll	2"		n/a	FT	300			
W	258	CL-350 DUCTILE IRON WATER PIPE W/ BITUMINOUS SEAL COATING INSIDE & OUTSIDE	3"	CL-350	n/a	FT	60			
W	263	CL-350 DUCTILE IRON WATER PIPE W/ BITUMINOUS SEAL COATING INSIDE & OUTSIDE	12"	CL-350	n/a	FT	40			
W	264	CL-350 DUCTILE IRON WATER PIPE W/ BITUMINOUS SEAL COATING INSIDE & OUTSIDE	16"	CL-350	n/a	FT	40			
W	265	CL-350 DUCTILE IRON WATER PIPE W/ BITUMINOUS SEAL COATING INSIDE & OUTSIDE	18"	CL-350	n/a	FT	40			
W	266	CL-350 DUCTILE IRON WATER PIPE W/ BITUMINOUS SEAL COATING INSIDE & OUTSIDE	24"	CL-350	n/a	FT	40			
W	267	CL-350 DUCTILE IRON WATER PIPE W/ BITUMINOUS SEAL COATING INSIDE & OUTSIDE	36"	CL-350	n/a	FT	40			
W	268	C900 WATER PIPE SDR 14	4"	C-900		FT	100			
W	269	C900 WATER PIPE SDR 14	6"	C-900		FT	200			
W	270	C900 WATER PIPE SDR 14	8"	C-900		FT	200			
W	271	C900 WATER PIPE SDR 14	10"	C-900		FT	40			
W	273	SDR 11, 2" IPS BLACK WATER PIPE	2"	SDR-11		FT	100			

WATER	ITEM #	DESCRIPTION	SIZE	APPROVED PART #	ALTERNATE PART #	UNIT	EST. QTY. FY 26/27	BIDDER	UNIT PRICE	ESTIMATED DELIVERY TIME
		PIPE FITTINGS								
W	277	PIPE STIFFENER (PLASTIC)	3/4"			EA	1000			

W	278	PIPE STIFFENER (PLASTIC)	1"			EA	2000			
W	279	PIPE INSERT; FORD # 55 STAINLESS STELL	2"			EA	14			
W	293	CAP; TYLER	2"			EA	2			
W	294	CAP; TYLER	3"			EA	2			
W	295	CAP; TYLER	4"			EA	2			
W	296	CAP; TYLER	4" X 2"			EA	2			
W	297	CAP; TYLER	6"			EA	2			
W	298	CAP; TYLER	6" X 2"			EA	2			
W	299	CAP; TYLER	8"			EA	2			
W	300	CAP; TYLER	8" X 2"			EA	2			
W	345	ANCHOR COUPLING; TYLER	6" X 13" LONG			EA	6			
W	346	ANCHOR COUPLING; TYLER	6" X 18" LONG			EA	6			
W	347	ANCHOR COUPLING; TYLER	6" X 24" LONG			EA	6			
WATER	**ITEM #**	**DESCRIPTION**	**SIZE**	**APPROVED PART #**	**ALTERNATE PART #**	**UNIT**	**EST. QTY. FY 26/27**	**BIDDER**	**UNIT PRICE**	**ESTIMATED DELIVERY TIME**
		ACCESSORIES								
W	389	M.J. ACC KIT; UFCO	3"	912-096-5892		EA	4			
W	390	M.J. ACC KIT; SIGMA	4"	DGP 4"		EA	5			
W	391	M.J. BOLT PACK SET	6"	SIP 6"		EA	10			
W	392	M.J. BOLT PACK SET	8"	SIP 8"		EA	4			
W	393	M.J. ACC KIT; SIGMA	10"	DGP 10		EA	2			
W	394	M.J. ACC KIT	12"			EA	4			
W	395	M.J. ACC KIT	16"			EA	4			
W	397	TRANSITION GASKET	4"			EA	4			
W	398	TRANSITION GASKET	6"			EA	8			
W	399	TRANSITION GASKET	8"			EA	6			
W	400	MEGALUG D. I.; FORD	3"	UFR 1500-SA-3-I		EA	4			
W	401	MEGALUG AND ACC KIT (D I); SIGMA	4"	829,805,219,567		EA	4			
W	402	MEGALUG AND ACC KIT (D I); SIGMA	6"	UFR 1400-DA-6		EA	4			
W	403	MEGALUG AND ACC KIT (D I); EBAA	8"	110 804 1903		EA	2			
W	404	MEGALUG AND ACC KIT (D I); EBAA	10"	1,110,041,903		EA	2			
W	405	MEGALUG AND ACC KIT (D I); FORD	12"	UFR 1400-DA-12-I		EA	2			
W	406	MEGALUG AND ACC KIT (D I)	16"			EA	4			
W	407	MEGALUG AND ACC KIT (D I)	24"			EA	2			
W	408	MEGALUG AND ACC KIT (D.I.)	36"			EA	2			
W	412	MEGALUG AND ACC KIT (C900); SIGMA	4"	829,805,219,864		EA	10			
W	413	MEGALUG AND ACC KIT (C900); SIGMA	6"	829 805 219 871		EA	40			
W	414	MEGALUG AND ACC KIT (C900); SIGMA	8"	829 805 219 888		EA	30			
W	415	C900 MEGALUG; EBAA	10"	2,010,161,903		EA	6			
W	416	C900 MEGALUG; SIGMA	12"	829 052 199 01		EA	6			
W	417	MEGALUG AND ACC KIT ((DI)	18"			EA	4			
W	418	MEGALUG AND ACC KIT (D I)	20"			EA	4			
WATER	**ITEM #**	**DESCRIPTION**	**SIZE**	**APPROVED PART #**	**ALTERNATE PART #**	**UNIT**	**EST. QTY. FY 26/27**	**BIDDER**	**UNIT PRICE**	**ESTIMATED DELIVERY TIME**
		VALVES								
W	423	GATE VALVE - THREADED; KENNEDY	2"	228D2X		EA	10			
W	424	GATE VALVE; KENNEDY	3"	324,067,014,001		EA	2			
W	425	GATE VALVE' M&H	4"	367,571,011,008		EA	2			
W	426	GATE VALVE; M&H	6"	467,571,011,008		EA	5			
W	427	TAPPING VALVE; MUELLER	6"	4,187,696		EA	2			
W	428	GATE VALVE; MUELLER	8"	080A236023LN		EA	5			
W	429	GATE VALVE	10"			EA	1			
W	430	GATE VALVE; M&H	12"	587,571,011,008		EA	1			
W	431	GATE VALVE; MUELLER	16"	11,505,876,777		EA	1			
WATER	**ITEM #**	**DESCRIPTION**	**SIZE**	**APPROVED PART #**	**ALTERNATE PART #**	**UNIT**	**EST. QTY. FY 26/27**	**BIDDER**	**UNIT PRICE**	**ESTIMATED DELIVERY TIME**
		VALVE BOXES/RISERS								
W	436	SQUARE VALVE BOX CASTING & LID		JBS 8006		EA	15			
W	437	SQUARE STEEL VALVE BOX RISER	1.5"	JBS 8006		EA	5			
W	438	CONCRETE VALVE BOX RISER	2"			EA	15			
W	439	CONCRETE VALVE BOX RISER	4"			EA	15			
W	440	CONCRETE VALVE BOX RISER	6"			EA	15			

WATER MATERIALS BID LIST 2025-2026

W	441	CONCRETE VALVE BOX RISER	12"			EA	10			
W	442	CONCRETE VALVE BOX RISER	18"			EA	10			
W	500	VALVE BOX EXTENSION; SIGMA	1"	VBR-1		EA	25	Consolidated Pipe & Supply	$19.05	Stock
W	501	VALVE BOX EXTENSION; SIGMA	1.5"	VBR-1.5		EA	25	Consolidated Pipe & Supply	$23.25	Stock
W	502	VALVE BOX EXTENSION; SIGMA	2"	VBR-2		EA	30	Consolidated Pipe & Supply	$23.25	Stock
W	503	VALVE BOX EXTENSION; SIGMA	3"	VBR-3		EA	25	Consolidated Pipe & Supply	$31.75	Stock
W	504	VALVE BOX EXTENSION; SIGMA	4"	VBR-4		EA	25	Consolidated Pipe & Supply	$37.05	Stock
W	505	VALVE BOX EXTENSION; SIGMA	6"	VBR-6		EA	25	Consolidated Pipe & Supply	$52.94	Stock
		HIGHLIGHTED PORTION IS ALSO ON THE GAS BID (G-232-237)	***PLEASE ALSO BID ON GAS (G-232-237) AS WELL***	***PLEASE ALSO BID ON GAS (G-232-237) AS WELL***						
WATER	**ITEM #**	**DESCRIPTION**	**SIZE**	**APPROVED PART #**	**ALTERNATE PART #**	**UNIT**	**EST. QTY. FY 26/27**	**BIDDER**	**UNIT PRICE**	**ESTIMATED DELIVERY TIME**
		HYDRANTS								
W	448	BLOW OFF-ABOVE GROUND; KUPFERLE	2" STRAIGHT BURY	MODEL 77		EA	8			
W	449	BLOW OFF-BELOW GROUND; KUPFERLE	2" STRAIGHT BURY	MODEL 78		EA	5			
W	450	POST HYDRANT,	3' BURY, 3" MJ SHOE, 2-1/2" OUTLET	M&H MODEL 33		EA	2			
W	451	FIRE HYDRANT ASSEMBLY; M&H YELLOW	5 1/4" 3' 6"bury	MODEL 129 3-Way 1 Pumper/2 Hose		EA	6			
W	452	HYDRANT TRAFFIC REPAIR KIT ; MUELLER	5 1/4"	MUELLER HRP301		EA	5			
W	453	HYDRANT TRAFFIC REPAIR KIT ; AMERICAN	5 1/4"	AMERICAN AD-B62B-KIT		EA	1			
W	454	HYDRANT TRAFFIC REPAIR KIT ; M&H	5 1/4"	M&H		EA	5			
W	458	MUELLER EXTENSION KIT	5 1/4" X 6"			EA	1			
W	459	MUELLER EXTENSION KIT	5 1/4" X 12"	A320-010		EA	1			
W	460	MUELLER EXTENSION KIT	5 1/4" X 18"	A320-16		EA	1			
W	461	MUELLER EXTENSION KIT	5 1/4" X 24"	A320-20		EA	1			
W	462	M&H EXTENSION KIT	5 1/4" X 6"			EA	1			
W	463	M&H EXTENSION KIT	5 1/4" X 12"	441129-5-12		EA	1			
W	464	M&H EXTENSION KIT	5 1/4" X 18"	441129-5-18		EA	1			
W	465	M&H EXTENSION KIT	5 1/4" X 24"	441129-5-24		EA	1			
WATER	**ITEM #**	**DESCRIPTION**	**SIZE**	**APPROVED PART #**	**ALTERNATE PART #**	**UNIT**	**EST. QTY. FY 26/27**	**BIDDER**	**UNIT PRICE**	**ESTIMATED DELIVERY TIME**
		INSERT VALVE & SLEEVES								
W	480	INSERT VALVE & SLEEVE W/ INSTALLATION	6"	HYDRO-STOP INSTA-VALVE 250 PATROIT	ROMAC	EA	1			
W	481	INSERT VALVE & SLEEVE W/ INSTALLATION	8"	HYDRO-STOP INSTA-VALVE 250 PATROIT	ROMAC	EA	1			
W	482	INSERT VALVE & SLEEVE W/ INSTALLATION	10"	HYDRO-STOP INSTA-VALVE 250 PATROIT	ROMAC	EA	1			
W	483	INSERT VALVE &SLEEVE W/ INSTALLATION	12"	HYDRO-STOP INSTA-VALVE 250 PATROIT	ROMAC	EA	1			
W	484	INSERT VALVE & SLEEVE W/ INSTALLATION	16"	HYDRO-STOP INSTA-VALVE 250 PATROIT		EA	1			

GAS MATERIALS BID LIST 2025-2026

GAS	ITEM #	DESCRIPTION	SIZE	APPROVED PART #	ALTERNATE PART #	UNIT	EST QTY FY 26/27	BIDDER	UNIT PRICE	ESTIMATED DELIVERY TIME
		METER RISERS								
G	89	RISER, ANODELESS, 36V X 24H, ELSTER PERFECTION	3/4" X 3/4"	79207		EA	300	Consolidated Pipe & Supply	$34.50	Stock
G	90	RISER, ANODELESS, ELSTER PERFECTION	1" X 1"	75766		EA	30	Consolidated Pipe & Supply	$47.50	Stock
G	92	RISER, ANODELESS, ELSTER PERFECTION,	2" X 2"	ASR2-2F-PB		EA	30	Consolidated Pipe & Supply	$158.00	Stock
GAS	ITEM #	DESCRIPTION	SIZE	APPROVED PART #	ALTERNATE PART #	UNIT	EST QTY FY 26/27	BIDDER	UNIT PRICE	ESTIMATED DELIVERY TIME
		CUTTOFS								
G	96	STOPCOCK; JOMAR 241-004D	3/4"	241-004D		EA	300	Consolidated Pipe & Supply	$35.50	Stock or 1-2 wks
G	97	STOPCOCK, HIGH PRESSURE, MUELLER	3/4"	3/4 - H11185		EA	10	Consolidated Pipe & Supply	$121.08	Stock or 1-2 wks
G	98	STOPCOCK;JOMAR 240-005B STRAIGHT	1"	240-005B		EA	30	Consolidated Pipe & Supply	$36.70	Stock or 1-2 wks
G	99	STOPCOCK; JOMAR 241-005D	1"	241-005D		EA	40	Consolidated Pipe & Supply	$52.90	Stock or 1-2 wks
G	100	STOPCOCK; 175 MAOP MUELLER	1 1/4"	1 1/4"H11175		EA	10	Consolidated Pipe & Supply	$50.84	Stock or 1-2 wks
G	101	STOPCOCK; 175 MAOP MCDONALD	1 1/2"	560 B 1 1/2"		EA	10	Consolidated Pipe & Supply	$78.34	Stock or 1-2 wks
G	102	STOPCOCK; 175 MAOP MUELLER	2"	2" H11175		EA	30	Consolidated Pipe & Supply	$85.11	Stock or 1-2 wks
GAS	ITEM #	DESCRIPTION	SIZE	APPROVED PART #	ALTERNATE PART #	UNIT	EST QTY FY 26/27	BIDDER	UNIT PRICE	ESTIMATED DELIVERY TIME
		POLYETHYLENE PIPE								
G	107	PIPE; HIGH DENSITY 8300 4710 BLK/YELLOW STRIPE-SDR-11 (500 FT ROLLS)	3/4"	1114569-83P 00.75"		FT	20000	Consolidated Pipe & Supply	$0.64	STOCK
G	108	PIPE; HIGH DENSITY 8300 4710 BLK/YELLOW STRIPE-SDR-11(500 FT ROLLS)	1"	1114606-83P 01.00"		FT	3000	Consolidated Pipe & Supply	$0.96	STOCK
G	109	PIPE; HIGH DENSITY 8300 4710 BLK/YELLOW STRIPE -SDR-11(500 FT ROLLS)	1 1/4"	1056882-83P 01.25"		FT	350	Consolidated Pipe & Supply	$122.00	STOCK
G	110	PIPE; HIGH DENSITY 8300 4710 BLK/YELLOW STRIPE-SDR-11 (500 FT ROLLS)	2"	1056925-83P 0.200		FT	15000	Consolidated Pipe & Supply	$1.58	STOCK
G	111	PIPE; HIGH DENISTY 8300 4710 BLK/YELLOW STRIPE -SDR-11(40 FT PER SECTION)	3"	1056967-83P 03.00"		FT	200	Consolidated Pipe & Supply	$3.48	STOCK
G	112	PIPE; HIGH DENSITY 8300 4710 BLK/YELLOW STRIPE-SDR-11(40 FT PER SECTION)	4"	1061088-83P 04.00"		FT	5000	Consolidated Pipe & Supply	$5.77	STOCK
G	113	PIPE; HIGH DENSITY 8300 4710 BLK/YELLOW STRIPE -SDR-11(40 FT PER SECTION)	6"	1057061-83P 06.00"		FT	2000	Consolidated Pipe & Supply	$12.80	STOCK
		DURA LINE NOT ACCEPTED								
		PERFORMANCE PIPE 8300 SERIES BLACK / YELLOW STRIPE QUOTED AS SPECIFIED								
GAS	ITEM #	DESCRIPTION	SIZE	APPROVED PART #	ALTERNATE PART #	UNIT	EST QTY FY 26/27	BIDDER	UNIT PRICE	ESTIMATED DELIVERY TIME
		POLYETHYLENE FITTINGS								
G	118	CAP; BUTT FUSE HIGH DENISTY 8100 4710	3/4"	BBF40-07		EA	100	Consolidated Pipe & Supply	$2.80	Stock
G	119	CAP; BUTT FUSE HIGH DENSITY 8100 4710	1"	BBF40-1		EA	15	Consolidated Pipe & Supply	$5.00	Stock
G	121	CAP; BUTT FUSE HIGH DENSITY8100 4710	2"	BBF40-2		EA	40	Consolidated Pipe & Supply	$2.30	Stock
G	122	CAP; BUTT FUSE HIGH DENSITY 8100 4710	3"	BBF40-3		EA	10	Consolidated Pipe & Supply	$6.40	Stock
G	123	CAP; BUTT FUSE HIGH DENSITY 8100 4710	4"	BBF40-4		EA	25	Consolidated Pipe & Supply	$9.98	Stock
G	124	CAP; BUTT FUSE HIGH DENSITY 8100 4710	6"	BBF40-6		EA	10	Consolidated Pipe & Supply	$24.00	Stock
G	125	REDUCER; BUTT FUSE HIGH DENSITY 8100 4710	1" X 1/2"	1006458		EA	5	Consolidated Pipe & Supply	$4.12	Stock
G	126	REDUCER; BUTT FUSE HIGH DENSITY 8100 4710	1" X 3/4"	1036888		EA	10	Consolidated Pipe & Supply	$4.78	Stock
G	127	REDUCER; BUTT FUSE HIGH DENSITY 8100 4710	1 1/4" X 1"	1007964		EA	10	Consolidated Pipe & Supply	$5.10	Stock
G	128	REDUCER; BUTT FUSE HIGH DENISTY 8100 4710	2" X 1"	1063171		EA	10	Consolidated Pipe & Supply	$5.90	Stock
G	129	REDUCER; BUTT FUSE HIGH DENSITY 8100 4710	2" X 1 1/4"	1007977		EA	10	Consolidated Pipe & Supply	$5.90	Stock
G	130	REDUCER; BUTT FUSE HIGH DENSITY 8100 4710	3" X 2"	1007985		EA	10	Consolidated Pipe & Supply	$8.01	Stock
G	131	REDUCER; BUTT FUSE HIGH DENSITY 8100 4710	6" X 4"	1006469		EA	10	Consolidated Pipe & Supply	$27.00	Stock
G	132	REDUCER; BUTT FUSE HIGH DENSITY 8100 4710	4" x 3"	1007992		EA	6	Consolidated Pipe & Supply	$10.60	Stock
G	133	REDUCER; BUTT FUSE HIGH DENSITY 8100 4710	4" X 2"	1006466		EA	25	Consolidated Pipe & Supply	$9.10	Stock
G	134	TEE; HIGH DENSITY 8100 4710	3/4"	1007902		EA	30	Consolidated Pipe & Supply	$4.80	Stock
G	135	TEE; HIGH DENSITY 8100 4710	1"	1007910		EA	20	Consolidated Pipe & Supply	$5.10	Stock

GAS MATERIALS BID LIST 2025-2026

G	136	TEE; HIGH DENSITY 8100 4710	1 1/4"	1007917		EA	4	Consolidated Pipe & Supply	$7.90	Stock
G	137	TEE; HIGH DENSITY 8100 4710	2"	1006426		EA	20	Consolidated Pipe & Supply	$7.09	Stock
G	138	TEE; HIGH DENSITY 8100 4710	3"	1007933		EA	4	Consolidated Pipe & Supply	$15.78	Stock
G	139	TEE; HIGH DENSITY8100 4710	4"	1006434		EA	20	Consolidated Pipe & Supply	$17.90	Stock
G	140	TEE; HIGH DENSITY 8100 4710	6"	1006442		EA	6	Consolidated Pipe & Supply	$44.00	Stock
G	141	ELBOW; 90 D HIGH DENSITY 8100 4710	2"	1006422		EA	10	Consolidated Pipe & Supply	$4.90	Stock
G	142	ELBOW; 90 D HIGH DENSITY 8100 4710	3"	1007932		EA	10	Consolidated Pipe & Supply	$11.90	Stock
G	143	ELBOW; 90 D HIGH DENSITY 8100 4710	4"	1006432		EA	10	Consolidated Pipe & Supply	$15.00	Stock
G	144	ELBOW; 90 D HIGH DENSITY 8100 4710	6"	1006440		EA	10	Consolidated Pipe & Supply	$34.00	Stock
G	145	ELBOW; 45 D HIGH DENSITY 8100 4710	4"	1006430		EA	10	Consolidated Pipe & Supply	$15.00	Stock
GAS	**ITEM #**	**DESCRIPTION**	**SIZE**	**APPROVED PART #**	**ALTERNATE PART #**	**UNIT**	**EST QTY FY 26/27**	**BIDDER**	**UNIT PRICE**	**ESTIMATED DELIVERY TIME**
		BOLT ON STEEL TAPPING SADDLE								
G	149	TAPPING SADDLE; STEEL, CONTINENTAL	1 1/4"	1315-15-1013-00		EA	4	Consolidated Pipe & Supply	$226.13	Stock or 3-4 wks
G	150	TAPPING SADDLE; STEEL, CONTINENTAL	2" X 3/4"	1315-17-1013-00		EA	4	Consolidated Pipe & Supply	$337.15	Stock or 3-4 wks
G	151	TAPPING SADDLE; STEEL, CONTINENTAL	2" X 1"	1315-17-1014-00		EA	4	Consolidated Pipe & Supply	$261.50	Stock or 3-4 wks
G	152	TAPPING SADDLE; STEEL, CONTINENTAL	2 1/2" X 1"			EA	4	Consolidated Pipe & Supply	$10.02	Stock or 3-4 wks
G	153	TAPPING SADDLE; STEEL, CONTINENTAL	3" X 1""	1315-19-1014-00		EA	4	Consolidated Pipe & Supply	$268.90	Stock or 3-4 wks
G	154	TAPPING SADDLE; STEEL, CONTINENTAL	4" X 1"	1315-21-1014-00		EA	4	Consolidated Pipe & Supply	$271.16	Stock or 3-4 wks
G	155	TAPPING SADDLE; STEEL, CONTINENTAL	6" X 1"	1315-24-1014-00		EA	4	Consolidated Pipe & Supply	$429.11	Stock or 3-4 wks
GAS	**ITEM #**	**DESCRIPTION**	**SIZE**	**APPROVED PART #**	**ALTERNATE PART #**	**UNIT**	**EST QTY FY 26/27**	**BIDDER**	**UNIT PRICE**	**ESTIMATED DELIVERY TIME**
		LYCOFIT FITTINGS								
G	160	REDUCER; LYCOFIT	3/4" X 1/2"	LCY060Y010B-RR		EA	10	Consolidated Pipe & Supply	$45.90	Stock or 3-4 wks
G	161	TEE; LYCOFIT	3/4"	LC060Y-3TR		EA	25	Consolidated Pipe & Supply	$87.06	Stock or 3-4 wks
G	162	TEE; LYCOFIT	1"	LC070Y-3TR		EA	20	Consolidated Pipe & Supply	$70.50	Stock or 3-4 wks
G	163	TEE; LYCOFIT	2"	LC200Y-3TR		EA	20	Consolidated Pipe & Supply	$176.11	Stock or 3-4 wks
G	164	LYCO CAP	3/4"	LC060Y ECR		EA	50	Consolidated Pipe & Supply	$29.90	Stock or 3-4 wks
G	165	LYCO CAP	1"	LC070Y-ECR		EA	20	Consolidated Pipe & Supply	$41.12	Stock or 3-4 wks
G	166	LYCO CAP	2"	LC200Y-ECR		EA	10	Consolidated Pipe & Supply	$93.15	Stock or 3-4 wks
G	167	COUPLING; LYCOFIT	3/4"	LC 060 Y-DER		EA	100	Consolidated Pipe & Supply	$30.04	Stock or 3-4 wks
G	168	COUPLING; LYCOFIT	1/2"	LC 010 B-DER		EA	10	Consolidated Pipe & Supply	$18.05	Stock or 3-4 wks
G	169	COUPLING; LYCOFIT	1"	LC 070Y-DER		EA	50	Consolidated Pipe & Supply	$19.13	Stock or 3-4 wks
G	170	COUPLING; LYCOFIT	1 1/4"	LCO80X-DESR		EA	10	Consolidated Pipe & Supply	$82.55	Stock or 3-4 wks
G	171	COUPLING; LYCOFIT	2"	LC200Y-DESR		EA	40	Consolidated Pipe & Supply	$121.60	Stock or 3-4 wks
G	172	COUPLING; LYCOFIT REPAIR	2"	LC 200Y-DER		EA	15	Consolidated Pipe & Supply	$94.66	Stock or 3-4 wks
GAS	**ITEM #**	**DESCRIPTION**	**SIZE**	**APPROVED PART #**	**ALTERNATE PART #**	**UNIT**	**EST QTY FY 26/27**	**BIDDER**	**UNIT PRICE**	**ESTIMATED DELIVERY TIME**
		POLYVALVES								
G	177	POLYVALVE; KEROTEST FULL PORT, 4710	1"	99051111	PERFECTION 45011	EA	10	Consolidated Pipe & Supply	$45.00	Stock or 4-6 wks
G	178	POLYVALVE; KEROTEST FULL PORT, 4710	1 1/4"	99051211	PERFECTION 45172	EA	5	Consolidated Pipe & Supply	$39.50	Stock or 4-6 wks
G	179	POLYVALVE; KEROTEST FULL PORT, 4710	2"	99052011	PERFECTION 46001	EA	25	Consolidated Pipe & Supply	$77.00	Stock or 4-6 wks
G	180	POLYVALVE; KEROTEST FULL PORT, 4710	3'	99053011	PERFECTION 47016	EA	5	Consolidated Pipe & Supply	$190.00	Stock or 4-6 wks
G	181	POLYVALVE; KEROTEST FULL PORT, 4710	4"	99054011	PERFECTION 47010	EA	25	Consolidated Pipe & Supply	$261.00	Stock or 4-6 wks
G	182	POLYVALVE; KEROTEST FULL PORT, 4710	6"	99056011	PERFECTION 48000	EA	5	Consolidated Pipe & Supply	$544.00	Stock or 4-6 wks
GAS	**ITEM #**	**DESCRIPTION**	**SIZE**	**APPROVED PART #**	**ALTERNATE PART #**	**UNIT**	**EST QTY FY 26/27**	**BIDDER**	**UNIT PRICE**	**ESTIMATED DELIVERY TIME**
		TRANSITION FITTINGS								
G	187	TRANSITION FITTING; STEEL - ELSTER PERFECTION	3/4" X 1/2"	700303		EA	5	Consolidated Pipe & Supply	$61.10	Stock or 5-6 wks
G	188	TRANSITION FITTING; STEEL - ELSTER PERFECTION	3/4" X 3/4"	700901		EA	5	Consolidated Pipe & Supply	$22.00	Stock
G	189	TRANSITION FITTING; STEEL - ELSTER PERFECTION	1" X 1"	701301		EA	5	Consolidated Pipe & Supply	$30.50	Stock

GAS MATERIALS BID LIST 2025-2026

G	190	TRANSITION FITTING; STEEL - ELSTER PERFECTION	2" X 2"	702730		EA	5	Consolidated Pipe & Supply	$56.20	Stock
G	191	TRANSITION FITTING; STEEL - ELSTER PERFECTION	3" X 3"	702903		EA	5	Consolidated Pipe & Supply	$81.55	Stock
G	192	TRANSITION FITTING; STEEL - ELSTER PERFECTION	4" X 4"	703129		EA	5	Consolidated Pipe & Supply	$129.40	Stock
G	193	TRANSITION FITTING; STEEL - ELSTER PERFECTION	6" X 6"	704116		EA	5	Consolidated Pipe & Supply	$339.00	Stock
GAS	**ITEM #**	**DESCRIPTION**	**SIZE**	**APPROVED PART #**	**ALTERNATE PART #**	**UNIT**	**EST QTY FY 26/27**	**BIDDER**	**UNIT PRICE**	**ESTIMATED DELIVERY TIME**
		DRESSER COUPLINGS								
G	207	COUPLING; ARMORED COMPRESSION, DRESSER	3/4" X 6"	0900-0001-082		EA	5	Consolidated Pipe & Supply	$44.84	Stock or 4-5 wks
G	208	COUPLING; ARMORED COMPRESSION, DRESSER	1" X 6"	0090-0002-082		EA	5	Consolidated Pipe & Supply	$46.85	Stock or 4-5 wks
G	209	COUPLING; ARMORED COMPRESSION, DRESSER	1 1/4" X 6"	0090-0003-082		EA	5	Consolidated Pipe & Supply	$50.56	Stock or 4-5 wks
G	210	COUPLING; ARMORED COMPRESSION, DRESSER	1 1/2" X 6"	0090-0004-082		EA	5	Consolidated Pipe & Supply	$65.15	Stock or 4-5 wks
G	211	COUPLING; ARMORED COMPRESSION, DRESSER	2" X 6"	0090-0005-082		EA	5	Consolidated Pipe & Supply	$74.16	Stock or 4-5 wks
G	212	COUPLING; ARMORED COMPRESSION, DRESSER	3/4" X 12"	0090-0090-082		EA	5	Consolidated Pipe & Supply	$108.40	Stock or 4-5 wks
G	213	COUPLING; ARMORED COMPRESSION, DRESSER	1" X 12"	0090-0091-082		EA	5	Consolidated Pipe & Supply	$118.64	Stock or 4-5 wks
G	214	COUPLING; ARMORED COMPRESSION, DRESSER	1 1/4" X 12"	0090-0092-082		EA	5	Consolidated Pipe & Supply	$125.45	Stock or 4-5 wks
G	215	COUPLING; ARMORED COMPRESSION, DRESSER	1 1/2" X 12"	0090-0093-082		EA	5	Consolidated Pipe & Supply	$143.36	Stock or 4-5 wks
G	216	COUPLING; ARMORED COMPRESSION, DRESSER	2" X 12"	0090-0094-082		EA	5	Consolidated Pipe & Supply	$179.18	Stock or 4-5 wks
G	217	COUPLING; ARMORED COMPRESSION TEE, DRESSER	3/4"	0090-0710-082		EA	5	Consolidated Pipe & Supply	$79.05	Stock or 4-5 wks
G	218	COUPLING; ARMORED COMPRESSION TEE, DRESSER	1"	0090-0711-082		EA	5	Consolidated Pipe & Supply	$170.22	Stock or 4-5 wks
GAS	**ITEM #**	**DESCRIPTION**	**SIZE**	**APPROVED PART #**	**ALTERNATE PART #**	**UNIT**	**EST QTY FY 26/27**	**BIDDER**	**UNIT PRICE**	**ESTIMATED DELIVERY TIME**
		WELD TAP TEES								
G	223	MUELLER WELD ON TAP	3/4"	H - 17500 3/4"		EA	5	Consolidated Pipe & Supply	$37.10	Stock
G	224	MUELLER WELD ON TAP	1"	H - 17500 1"		EA	5	Consolidated Pipe & Supply	$44.00	Stock
G	225	MUELLER WELD ON TAP	2"	H - 17500 2"		EA	5	Consolidated Pipe & Supply	$95.90	Stock
GAS	**ITEM #**	**DESCRIPTION**	**SIZE**	**APPROVED PART #**	**ALTERNATE PART #**	**UNIT**	**EST QTY FY 26/27**	**BIDDER**	**UNIT PRICE**	**ESTIMATED DELIVERY TIME**
		VALVE BOXES								
G	230	TALL VALVE BOX WITH LIDS; SIGMA		562-S-G		EA	50	Consolidated Pipe & Supply	$94.30	Stock
G	231	SHORT VALVE BOX WITH LIDS; SIGMA		461-S-G		EA	10	Consolidated Pipe & Supply	$69.75	Stock
G	232	VALVE BOX EXTENSION; SIGMA	1"	VBR-1		EA	25	Consolidated Pipe & Supply	$19.05	Stock
G	233	VALVE BOX EXTENSION; SIGMA	1.5"	VBR 1.5		EA	25	Consolidated Pipe & Supply	$23.25	Stock
G	234	VALVE BOX EXTENSION; SIGMA	2"	VBR - 2		EA	30	Consolidated Pipe & Supply	$23.25	Stock
G	235	VALVE BOX EXTENSION; SIGMA	3"	VBR -3		EA	25	Consolidated Pipe & Supply	$31.75	Stock
G	236	VALVE BOX EXTENSION; SIGMA	4"	VBR - 4		EA	25	Consolidated Pipe & Supply	$37.05	Stock
G	237	VALVE BOX EXTENSION; SIGMA	6"	VBR - 6		EA	25	Consolidated Pipe & Supply	$52.94	Stock
		HIGHLIGHTED PORTION IS ALSO ON THE WATER BID (W-500-505)		***PLEASE BID ON WATER (W-500-505)* AS WELL***	***PLEASE BID ON WATER (W-500-505)* AS WELL***					
GAS	**ITEM #**	**DESCRIPTION**	**SIZE**	**APPROVED PART #**	**ALTERNATE PART #**	**UNIT**	**EST QTY FY 26/27**	**BIDDER**	**UNIT PRICE**	**ESTIMATED DELIVERY TIME**
		METAL INSERTS								
G	243	METAL STIFFNER INSERTS, ELSTER PERFECTION	3/4" X 6"	74201		EA	5	Consolidated Pipe & Supply	No Bid	No Bid
G	244	METAL STIFFNER INSERTS, ELSTER PERFECTION	1" X 6"	74203		EA	5	Consolidated Pipe & Supply	No Bid	No Bid
G	245	METAL STIFFNER INSERTS, ELSTER PERFECTION	1 1/4" x 6"	74204		EA	5	Consolidated Pipe & Supply	No Bid	No Bid
G	246	METAL STIFFNER INSERTS, ELSTER PERFECTION	1 1/2" x 6"	74206		EA	5	Consolidated Pipe & Supply	No Bid	No Bid
G	247	METAL STIFFNER INSERTS, ELSTER PERFECTION	2" X 6"	74205		EA	5	Consolidated Pipe & Supply	No Bid	No Bid
G	248	METAL STIFFNER INSERTS, ELSTER PERFECTION	3" X 6"	74210		EA	5	Consolidated Pipe & Supply	No Bid	No Bid

GAS MATERIALS BID LIST 2025-2026

GAS	ITEM #	DESCRIPTION	SIZE	APPROVED PART #	ALTERNATE PART #	UNIT	EST QTY FY 26/27	BIDDER	UNIT PRICE	ESTIMATED DELIVERY TIME
		MAGNESIUM ANODES								
G	253	ANODES, MAG	5#	ANODE - 5		EA	5	Consolidated Pipe & Supply	$49.75	STOCK
G	254	ANODES, MAG	17#	ANODE - 7		EA	5	Consolidated Pipe & Supply	$168.00	STOCK
GAS	**ITEM #**	**DESCRIPTION**	**SIZE**	**APPROVED PART #**	**ALTERNATE PART #**	**UNIT**	**EST QTY FY 26/27**	**BIDDER**	**UNIT PRICE**	**ESTIMATED DELIVERY TIME**
		TRACER WIRE								
G	259	TRACER WIRE - 12 GAUGE COPPER (500' ROLLS)		KRIS-TECH WIRE CW0177500		FT	30000	Consolidated Pipe & Supply	$0.22	STOCK
GAS	**ITEM #**	**DESCRIPTION**	**SIZE**	**APPROVED PART #**	**ALTERNATE PART #**	**UNIT**	**EST QTY FY 26/27**	**BIDDER**	**UNIT PRICE**	**ESTIMATED DELIVERY TIME**
		ELECTROFUSION								
G	262	COUPLING; CENTRAL 4710 HDPE	1" X 1"	5760006		EA	30	Consolidated Pipe & Supply	$6.30	Stock
G	263	COUPLING; CENTRAL 4710 HDPE	2" X 2"	5760012		EA	20	Consolidated Pipe & Supply	$8.15	Stock
G	264	COUPLING; CENTRAL 4710 HDPE	3"	5757007		EA	10	Consolidated Pipe & Supply	$15.79	Stock
G	265	COUPLING; CENTRAL 4710 HDPE	4"			EA	20	Consolidated Pipe & Supply	$25.05	Stock
G	266	COUPLING; CENTRAL 4710 HDPE	6"			EA	10	Consolidated Pipe & Supply	$61.28	Stock
G	267	COUPLING; CENTRAL-REDUCING 4710 HDPE	1" X 3/4"			EA	50	Consolidated Pipe & Supply	$10.95	Stock
G	268	COUPLING; CENTRAL-REDUCING 4710 HDPE	1" X 1/2"			EA	10	Consolidated Pipe & Supply	$10.95	Stock
G	269	COUPLING; CENTRAL-TAP TEE 4710 HDPE	2" x 3/4"				200	Consolidated Pipe & Supply	$26.65	Stock
G	270	COUPLING; CENTRAL-TAP TEE 4710 HDPE	2" X 1"			EA	100	Consolidated Pipe & Supply	$26.68	Stock
G	271	COUPLING; CENTRAL- TAP TEE 4710 HDPE	3" x 1"			EA	20	Consolidated Pipe & Supply	$29.15	Stock
G	272	COUPLING; CENTRAL-TAP TEE 4710 HDPE	4" x 3/4"				100	Consolidated Pipe & Supply	$35.18	Stock
G	273	COUPLING; CENTRAL-TAP TEE 4710 HDPE	4" X 1"			EA	100	Consolidated Pipe & Supply	$35.18	Stock
G	274	COUPLING; CENTRAL-TAP TEE 4710 HDPE	6" X 1"			EA	20	Consolidated Pipe & Supply	$43.56	Stock
G	275	COUPLING; CENTRAL-TAP TEE-HV 4710 HDPE	2" X 2"			EA	20	Consolidated Pipe & Supply	$104.18	Stock
G	277	COUPLING; CENTRAL-TAP TEE-HV 4710 HDPE	3" X 2"			EA	10	Consolidated Pipe & Supply	$104.18	Stock
G	278	COUPLING; CENTRAL-TAP TEE-HV 4710 HDPE	4" X 2"			EA	10	Consolidated Pipe & Supply	$110.94	Stock
G	279	COUPLING; CENTRAL-TAP TEE-HV 4710 HDPE	6" X 2"			EA	10	Consolidated Pipe & Supply	$112.98	Stock
GAS	**ITEM #**	**DESCRIPTION**	**SIZE**	**APPROVED PART #**	**ALTERNATE PART #**	**UNIT**	**EST QTY FY 26/27**	**BIDDER**	**UNIT PRICE**	**ESTIMATED DELIVERY TIME**
		EXCESS FLOW VALVES								
G	299	EXCESS FLOW VALVE SDR 11 IPS 4710 DRISCO 8300 SERIES 700	3/4"	UMAC IPS SDR11 8300 BFS/700 EFV	50098GB	EA	250	Consolidated Pipe & Supply	$18.00	Stock
G	300	EXCESS FLOW VALVE SDR 11 IPS PLEXO 4710 SERIES 1800	1"	UMAC SERIES 1800 GREEN LABEL		EA	15	Consolidated Pipe & Supply	$22.75	Stock
G	301	EXCESS FLOW VALVE SDR 11 IPS PLEXO 4710 SERIES 2600	1"	UMAC SERIES 2600 PINK LABEL		EA	10	Consolidated Pipe & Supply	$28.45	Stock

LEGAL NOTICE

INVITATION TO SUBMIT QUOTATIONS

The Town of Smyrna will accept quotations on the annual Gas, Water and Sewer materials for the Utilities Department. Bidders shall submit sealed quotations in the format specified in the Invitation to Submit Quotations no later than **2:00 p.m. May 19, 2026** at which time the bids will be publicly opened and read aloud. No bid may be withdrawn after the scheduled closing time for a period of 90 days. Bidding documents may be obtained at Smyrna Town Hall during regular business hours or www.townofsmyrna.org. Quotations should be mailed or hand delivered to:

Purchasing Department
Smyrna Town Hall
Sealed Bid on Annual Gas, Water & Sewer Materials
May 19 @ 2:00 p.m.
315 South Lowry Street
Smyrna, TN 37167

The Town of Smyrna will not discriminate in the purchase of all goods and services on the basis of race, color, religion, sex, national origin, age, disability or any other lawfully protected classification.

Verbal quotations, faxed quotations or quotations received after the closing date will not be accepted. The Town of Smyrna reserves the right to reject any and all bids, to waive technicalities or informalities and to accept any bid deemed to be in the best interest of the Town.

BY: Sierra Lowry
Finance Director

TO BE RUN: May 5, 2026

Core and Main

COMPANY NAME

AGREEMENT

This Agreement is made and entered into as of this 19 day of May, 2026, by and between _____, a Core and main (the "Bidder") and the Town of Smyrna, Tennessee, a Tennessee municipal corporation (the "Town") for the purpose of purchasing Water and Sewer Materials.

WHEREAS, the Bidder has submitted a quotation for the provision of certain products and/or services to the Town, all in accordance with the terms of the Invitation to Submit Quotations attached hereto and incorporated herein by reference as if set forth at length verbatim as Exhibit A (the "ISQ"), and which Proposal from the Bidder is attached hereto and incorporated herein by reference as if set forth at length verbatim as Exhibit B (the "Quotation"); the ISQ and the Quotation, together with any and all ancillary documents thereto, shall be collectively referred to herein as the "Bid Documents"; and

WHEREAS, the Town now desires to accept the Bidder's quotation, in accordance with the terms set forth in such Bid Documents.

NOW, THEREFORE, in consideration of the mutual covenants contained herein, and for other good and valuable consideration, the receipt and sufficiency of which is hereby acknowledged, the undersigned do hereby agree as follows:

1. Acceptance of Bid Documents. The terms of the Bid Documents, as incorporated herein by reference, are hereby accepted by the parties hereto. The Bidder hereby agrees to provide the goods and/or services contemplated by such Bid Documents in accordance with the terms set forth therein. The Town hereby accepts the Bidder's quotation to provide the goods and/or services contemplated by such Bid Documents in accordance with the terms set forth therein.

2. Entire Agreement. This Agreement, including the exhibits and any other documents referred to herein or therein, which form a part hereof, contains the entire understanding of the parties with respect to its subject matter. There are no restrictions, agreements, promises, warranties, covenants or undertakings other than those expressly set forth herein or therein. This Agreement supersedes all prior written or oral agreements and understandings between the parties with respect to its subject matter and may not be altered, modified or amended, in whole or in part, except by the express written authorization and consent of the parties hereto.

3. Severability. This agreement constitutes the product of negotiations of the parties hereto and any enforcement of hereof will be interpreted in a neutral manner and not more strongly against any party based upon the source of the draftsmanship of this Agreement. If any provision of this Agreement shall be held invalid or unenforceable by a court of competent jurisdiction, the remaining provisions hereof shall continue to be fully effective.

4. Limitation of Liability. The Town of Smyrna shall not be liable for any loss, claim, expense or damage caused by, contributed to or arising out of the acts or omission of Bidder or third parties, whether negligent or otherwise.

5. Warranties. The Bidder warrants to the Town that all materials and equipment furnished under this Contract will be new unless otherwise specified, and that all work will be of good quality, free from faults and defects, suitable for the purpose for which the materials and equipment are furnished, and in conformance with the Agreement. If it does not perform as warranted, Bidder shall use all commercially reasonable efforts to correct the product(s) so that it operates in all material respects in conformity with the written representations of Bidder. If Bidder cannot correct the product(s) within a reasonable period of time, Bidder shall refund the purchase price of the product(s). All work not conforming to these requirements, including substitutions not properly approved and authorized, may be considered defective.

6. Software Deadline, Testing and Acceptance: If applicable to the Agreement, software provided by Bidder shall be installed for the purposes of testing, as stated herein below, no later than one hundred twenty (120) days from the effective date of this Agreement unless the parties, in writing, set a different specific date. In Addition, software provided by Bidder to The Town is subject to inspection and testing to verify that the software conforms to its written specifications and to ensure it meets The Town's needs. The Town shall have seven (7) business days after the software is installed to perform testing of the software using The Town's data. The Town shall provide Bidder with written notice of acceptance or rejection of the software five (5) business days or less after the end of the testing period. If the Town does not provide timely written notice of acceptance or rejection to Bidder, the software shall be deemed to be accepted by The Town. If the software is rejected, The Town may, at its sole discretion, either (1) return the software and receive a refund of all fees paid with respect thereto, or (2) allow Bidder to repair or replace the software, without charge, in a timely manner. In the event The Town elects to allow the Bidder to repair or replace the software, The Town shall have an additional (7) business days in which to accept or reject the software as laid out hereinabove.

7. Use of The Town's Logo or Name: Bidder shall not use The Town's name or any logo in marketing or publicity materials or for marketing or publicity purposes without the prior written authorization from The Town. Bidder shall not issue, publish, or divulge any materials developed or used in the performance of this Agreement or make any statement to the media relating to this Agreement without the prior written consent of The Town.

8. Indemnification. The parties hereto agree that Bidder shall indemnify The Town for any and all claims of negligence, tortious conduct or otherwise unlawful acts committed by Bidder in the performance of their obligations under the terms of this agreement, including any and all attachments or exhibits thereto and Bidder agrees to pay any and all costs associated with the enforcement of the terms of this indemnity agreement by The Town, including but not limited to, court costs, civil judgments, assessments or any other reasonable fees associated therewith. This clause shall survive the expiration or termination of this Agreement and shall remain in full force and effect until the expiration of any applicable statute of limitation. In addition, Article II, Section 29 of the Tennessee Constitution prohibits municipalities from lending their credit to private of public entities and, therefore, prohibits an agreement by The Town to indemnify a third party or agree to a limitation of liability provision.

9. Non-Appropriation: Bidder acknowledges that The Town is a governmental entity, and the validity of this Agreement is based upon the availability of public funding under its authority. In the event The Town fails to appropriate funds or make monies available for any fiscal year covered by the term of this Agreement for services to be provided, this Agreement shall be terminated on the last day of the fiscal year for which funds were appropriated or monies made available for such purposes without liability to The Town, and such termination shall not be a breach of the Agreement, and any unused payment made to Bidder shall be returned to The Town.

10. Tax Exemption: As a tax-exempt entity, The Town shall not be responsible for sales or use taxes incurred for products or services. The Town shall supply Bidder with its Sales and Use Tax Exemption Certificate upon Bidder's request. Bidder shall bear the burden of providing its suppliers with a copy of The Town's tax exemption certificate and Bidder shall assume all liability for such taxes, if any, that should be incurred.

11. Attorney Fees. The parties hereto agree that The Town shall be in no event liable for any attorney's fees which Bidder may incur due to breach of this Agreement by either party; and further, The Town shall not acquiesce to any term in any document that indicates or infers The Town may or shall be responsible for the Attorney's fees of another party or the Bidder's attorney fees.

12. Boycott of Israel. The Bidder certifies that it is not currently engaged in, and covenants that it will not, for the duration of the Contract, engage in a Boycott of Israel, as that term is defined in Tenn. Code Ann. § 12-4-119.

13. Failure to perform. The parties agree, in the event Bidder fails to perform any obligation, other than with regards to the date of delivery, set out in this Agreement, the Town shall be reimbursed by Bidder for any and all expenses associated with having to obtain a new provider to finish out the contracted term, including, but in no way limited to, any charges/fees, which are above and beyond the amount the Town would have paid to Bidder to complete the same task; provided, however, that if the failure, by its nature, is one that can be cured, the Bidder shall have fifteen (15) business days after receipt of written notice from the Town to cure said failure to perform. The parties hereby agree, unless a specific date of delivery is provided in this Agreement or other bid documents, all deliveries shall be made to the Town no later than ninety (90) days from the date of order. The parties further agree that if Bidder, in good faith, is not able to meet this ninety (90) day deadline of delivery due to forces beyond his, her or its control, that were unforeseeable at the time of signing this contract, then this entire Agreement shall be voidable at the sole discretion of the Town. Should the Town elect to void this Agreement due to Bidder's good faith inability, due to forces beyond his, her or its control, and which were unforeseeable at the time of signing this Agreement to meet the delivery deadline, then neither party shall be deemed to have breached this Agreement, and Bidder shall return all monies, within seven (7) business days, paid by the Town for the products/items that could not be delivered in the allotted time.

14. Unilateral Modification of Agreement Not Permitted: Bidder may make unilateral changes to its Privacy Policy, provided any such changes are subject to the provisions of this Agreement but shall not materially alter the use of the service or reduce the level of protection provided to the Town at the time of the execution of this Agreement. Except as provided in the preceding sentence, notwithstanding anything in this Agreement to the contrary, any change to this Agreement made by Bidder that is not in writing and that is not properly executed by the signatures of authorized representatives of the parties hereto, including attestation by The Town's Clerk and approved as to form by the Town Attorney are subject to the terms and conditions of this Agreement.

15. Changes to Terms: Except as provided in Paragraph No. 13 above pertaining to Bidder's Privacy Policy, Bidder shall provide The Town written notice, sent in care of Town Attorney's Office, Smyrna, Tennessee, 315 South Lowry Street, Tennessee 37167, of any proposed change to this Agreement at least ninety (90) days prior to being effective to The Town. The Town shall have thirty (30) days after receiving the written notice to terminate this Agreement, and such cancellation shall not be a breach of this Agreement. Bidder will refund to The Town any payment made by The Town to Bidder equal to the difference between the number of months the payment was intended for and the number of months remaining on this Agreement that the fee was intended to cover.

16. Price Assurance: Unless specifically stated in this Agreement or other bid documents, the bid price shall be valid for the full term of this Agreement. If the Bidder, specifically states that he, she or it cannot honor the bid price for the full term of this Agreement; then this Agreement is voidable at the sole discretion of the Town, if at any time during the full term of this Agreement, Bidder requests to raise the bid

price. If the Town elects to void this Agreement, at its sole discretion, it shall not be deemed to be a breach of the contract by either party.

17. Confidentiality. The Town, as a Tennessee Municipal Corporation is subject to the Tennessee Open Records Act, set out in T.C.A. §10-7-503 et seq; therefore, this Agreement and all documents or materials, in any format, including, but not limited to paper, electronic or virtual, that are public records pursuant to law, are not confidential and are subject to disclosure. The Town will respond to all proper Open Records Requests in the time allowed by law, without any requirement to disclose such request to Bidder or provide Bidder with notice or the time to obtain a protective order. The Town does not have the burden of establishing that information is not confidential information or that its release is authorized to release the records. This section 16 serves to meet such burden and authorization of disclosure.

18. Mediation. The Town may, at its option, require the attempted resolution of any dispute arising under this Agreement by mediation prior to the filing of any lawsuit or other claim. Should any dispute arise, Bidder shall provide the Town notice of any intent to file suit by certified mail. The Town shall notify the Bidder of its intent to exercise its right to mediation within thirty (30) days of receiving such notice. If the Town does not exercise its right to mediation, Bidder may file suit. Any mediator selected under this clause shall be agreed upon by the parties and the costs of such mediation shall be divided and paid equally between the parties.

19. No Presumption Against Drafter: The parties are both business entities having substantial experience with the subject matter of this Agreement, and each has fully participated in the negotiation and drafting of this Agreement. Accordingly, this Agreement shall be construed without regard to the rule that ambiguities in a document are to be construed against the draftsman. No inferences shall be drawn from the fact that the final, duly executed Agreement differs in any respect from any previous draft hereof.

20. Governing Law. This Agreement shall be deemed to have been executed and delivered within the State of Tennessee, and the rights and obligations of the parties shall be construed and enforced in accordance with, and governed by, the laws of the State of Tennessee. The parties agree that all obligations of the parties are performable in Smyrna, Tennessee.

21. Choice of Forum and Venue. The parties' choice of forum and venue shall be exclusively in the courts of Rutherford County, Tennessee or the United States District Court, for the Middle District of Tennessee. The parties hereby waive their right to a jury trial. Any provision of the Agreement held to violate a law or regulation shall be deemed void, and all remaining provisions shall continue in force.

IN WITNESS WHEREOF, the undersigned have executed this Agreement as of the date set forth above.

TOWN OF SMYRNA, TENNESSEE

By: _____
Name: Mary Esther Reed
Title: Mayor

ATTEST:

_____
Amber Hobbs, Town Clerk

BIDDER:

By: Tanner Cole
Title: Branch Operations Manager

ATTEST:

_____

SECTION III - SPECIFICATIONS COMPLIANCE

Unless otherwise noted, all quotations for the annual gas, water and sewer materials shall be in complete accordance with the specifications detailed herein.

Bidders shall note in the space provided below any exceptions or deviations in any way from the specifications of any section of this ISQ. Bidders should provide complete detail of exceptions or deviations.

Proposal Exceptions

Section	Brief Description
W268-W273	GOOD THROUGH 6/30/2026
W438-W442	GOOD THROUGH 6/30/2026
W21-W47	No Quote
W56	Can not hold pricing
W453	No Quote
W480-W484	No Quote

By signature below, vendor acknowledges any quotation to be in full compliance with all aspects of each section of the ISQ not noted above. The undersigned hereby declares that no person or party other than the undersigned has any interest whatever in this proposal, that it is without any connection or collusion with any person or persons making or having made any proposal for the same work and without any previous understanding with such person or persons as to relative prices, obviating competition, and that it is made in good faith.

Core and Main	615-893-0900
COMPANY	TELEPHONE NUMBER
Kaden White	inside Salesman
REPRESENTATIVE NAME	REPRESENTATIVE TITLE
Kaden White	kaden.white@coreandmain.com
SIGNATURE	E-MAIL ADDRESS

SECTION III - SPECIFICATIONS COMPLIANCE

Unless otherwise noted, all quotations for the annual gas, water and sewer materials shall be in complete accordance with the specifications detailed herein.

Bidders shall note in the space provided below any exceptions or deviations in any way from the specifications of any section of this ISQ. Bidders should provide complete detail of exceptions or deviations.

Proposal Exceptions

Section	Brief Description
S51, S61-S63	GOOD THROUGH 6/30/2026
S71-S93	GOOD THROUGH 6/30/2026
S96-S97	No Quote

By signature below, vendor acknowledges any quotation to be in full compliance with all aspects of each section of the ISQ not noted above. The undersigned hereby declares that no person or party other than the undersigned has any interest whatever in this proposal, that it is without any connection or collusion with any person or persons making or having made any proposal for the same work and without any previous understanding with such person or persons as to relative prices, obviating competition, and that it is made in good faith.

Core and Main
COMPANY

615-893-0900
TELEPHONE NUMBER

Kaden White
REPRESENTATIVE NAME

inside Salesman
REPRESENTATIVE TITLE

Kw Wht
SIGNATURE

Kaden.white@coreandmain.com
E-MAIL ADDRESS

WATER MATERIALS BID LIST 2025-2026

WATER	ITEM #	DESCRIPTION	SIZE	APPROVED PART #	ALTERNATE PART #	UNIT	EST. QTY. FY 26/27	BIDDER	UNIT PRICE	ESTIMATED DELIVERY TIME
		METER YOKES/ACCESSORIES								
W	1	METER RETROSETTER W/ 360° LOCKWING & DC; MUELLER (FORD ALTERNATE)	5/8" X 3/4"	203B2446-R5---N	RETRO-2CVBRHH-NL	EA	10	CORE & MAIN	$172.93	7-28 DAYS
W	2	METER RISER; RELOCATOR W/ 360° LOCKWING & DC; MUELLER (FORD ALTERNATE)	5/8" X 3/4" X 7"	234B24118R5---N	VBHH42-7WR-NL	EA	200		$156.88	7-28 DAYS
W	3	METER RISER; RELOCATOR W/ 360° LOCKWING & DC; MUELLER (FORD ALTERNATE)	5/8" X 3/4" X 12"	238B24118R5---N	VBHH42-12-NL	EA	10		$203.17	7-28 DAYS
W	4	METER RISER RELOCATOR W/ 360° LOCKWING & DC; MUELLER (FORD ALTERNATE)	1" X 10"	389B24118R5---N	VBHH44-10-NL	EA	80		$333.37	7-28 DAYS
W	5	METER RISER; RELOCATOR W/ 360° LOCKWING & DC; MUELLER (FORD ALTERNATE)	1.5" X 14"	063B2424--5N	VBRHH46-14-NL	EA	5		$1,515.12	7-28 DAYS
W	6	METER RISER; RELOCATOR W/ 360° LOCKWING & DC; MUELLER (FORD ALTERNATE)	2" X 14"	087B2424--5N	VBRHH47-14-NL	EA	10		$1,665.28	7-28 DAYS
W	7	METER RISER; RELOCATOR W/360° LOCKWING & DC; FORD W/BYPASS	2" X 14"	1-VBHH47-14B-NL	n/a	EA	2		$1,917.76	7-28 DAYS
W	9	METER SWIVEL 2.5L; FORD	5/8" X 3/4" X 3/4"x 2.5" LONG	C38-23-2.5-NL	MUELLER H-10890N	EA	200		$10.54	7-28 DAYS
W	10	METER SWIVEL COUPLING ; FORD	5/8" x 3/4" x 3/4" x 2.25" LONG	C38-23-2.25-NL	MUELLER H-10890026	EA	5		$24.56	7-28 DAYS
W	11	METER SWIVEL COUPLING STRAIGHT; FORD	1"	C38-44-2-625-NL	MUELLER H-10890	EA	80		$16.21	7-28 DAYS
W	12	FLANGE PAK FOR METER - BRASS (BOX W/2)	1.5"	4415FSC	or equal	EA	8		$116.33	7-28 DAYS
W	13	FLANGE PAK FOR METER - BRASS (BOX W/ 2)	2"	4420FSC	or equal	EA	10		$126.23	7-28 DAYS
W	14	A-24 METER ADAPTOR; FORD	5/8" x 3/4" to 1"	A24-NL	or equal	EA	120		$31.93	7-28 DAYS
W	15	A-47 FLANGED METER ADAPTOR; FORD (BOX W/ 2)	1" TO 2"	A47-NL	or equal	EA	5		$161.89	7-28 DAYS
W	16	A-67 FLANGED METER ADAPTOR; FORD (BOX W/2)	1.5" TO 2"	A67-NL	or equal	EA	5		$232.91	7-28 DAYS

WATER	ITEM #	DESCRIPTION	SIZE	APPROVED PART #	ALTERNATE PART #	UNIT	EST. QTY. FY 26/27	BIDDER	UNIT PRICE	ESTIMATED DELIVERY TIME
		WATER REGULATORS								
W	17	REGULATOR; WATTS	3/4"	LF25AUB-Z3		EA	4	CORE & MAIN	$419.22	7-28 DAYS
W	18	REGULATOR; WATTS	1"	1LF25AUB-Z3		EA	4		$536.59	7-28 DAYS
W	19	REGULATOR; ZURN WILKINS	3/4"	MODEL 70XL		EA	2		$100.00	7-28 DAYS

WATER	ITEM #	DESCRIPTION	SIZE	APPROVED PART #	ALTERNATE PART #	UNIT	EST. QTY. FY 26/27	BIDDER	UNIT PRICE	ESTIMATED DELIVERY TIME
		WATER MOUDLE								
W	21	ITRON UNIVERSAL MOUDLE W/ LID MOUNTING KIT	UNIVERSAL	ERW-1350-001 100W+/CFG-1601-001	n/a	EA	275		NO BID	
W	22	ITRON UNIVERSAL LEAK SENSOR	UNIVERSAL	LDS-1601-001	n/a	EA	10		NO BID	
W	23	CELLULAR 500W MODULE W/ LID MOUNTING KIT	UNIVERSAL	ECW-1700-001/CFG-1601-001	n/a	EA	100		NO BID	

WATER	ITEM #	DESCRIPTION	SIZE	APPROVED PART #	ALTERNATE PART #	UNIT	EST. QTY. FY 26/27	BIDDER	UNIT PRICE	ESTIMATED DELIVERY TIME
		METERS AND PARTS								
W	24	METER CIB/HRE/USG W/ ITRON CONNECTOR; BADGER	5/8" X 3/4"	MODEL 25LL (NSF 61-G MTR)	n/a	EA	200		NO BID	
W	25	METER CIB/HRE/USG W/ ITRON CONNECTOR; BADGER	1"	MODEL 70 LL (NSF 61-G MTR)	n/a	EA	80		NO BID	
W	26	METER CIB/HRE/USG W/ ITRON CONNECTOR; BADGER	1.5	MODEL 120 LL (NSF 61-G-MTR)	n/a	EA	4		NO BID	
W	27	METER ELLIPTICALW/T. PLUG HRE/USG W/ ITRON CONNECTOR W/ D. P.; BADGER	2"	MODEL 170 LL (NSF 61- G-MTR)	n/a	EA	6		NO BID	
W	28	METER BOTTOMS FOR BADGER METER; BADGER	5/8" X 3/4"	57799 - 001	n/a	EA	25		NO BID	
W	29	METER BOTTOMS FOR BADGER METER	1"	59293 - 002	n/a	EA	10		NO BID	
W	37	CHAMBER for M70 BADGER METER	1"	33334-032	n/a	EA	5		NO BID	
W	38	CHAMBER for M120 BADGER METER	1.5"	33334-017	n/a	EA	5		NO BID	
W	39	CHAMBER forM170 BADGER METER	2"	33334-028	n/a	EA	5		NO BID	
W	40	RETROFIT REGISTER w/ ITRON CONNECTOR; BADGER	5/8" X 3/4"	M25/RETRO/RT	n/a	EA	400		NO BID	
W	41	RETROFIT REGISTER w/ ITRON CONNECTOR; BADGER	1"	M70/RETRO/RT	n/a	EA	6		NO BID	
W	42	RETROFIT REGISTER w/ ITRON CONNECTOR; BADGER	1.5"	M120/RETRO/RT	n/a	EA	2		NO BID	
W	43	RETROFIT REGISTER w/ ITRON CONNECTOR; BADGER	2"	M170/RETRO/RT	n/a	EA	4		NO BID	

WATER	ITEM #	DESCRIPTION	SIZE	APPROVED PART #	ALTERNATE PART #	UNIT	EST. QTY. FY 26/27	BIDDER	UNIT PRICE	ESTIMATED DELIVERY TIME
		ULTRASONIC METERS AND PARTS								
W	44	NEPTUNE METER W/ 5' ITRON CONNECTOR in 100 USG	2" x 17"	EU2E1G1SG61		EA	4		NO BID	
W	45	NEPTUNE METER W/ 25' ITRON CONNECTOR in 100 USG W/ FLANGE PAKS	3"X 12"	EU3A1G1SG61		EA	2		NO BID	
W	46	NEPTUNE METER W/ 25' ITRON CONNECTOR in 100 USG W/ FLANGE PAKS	4" X 14"	EU3C1G1SG61		EA	2		NO BID	
W	47	NEPTUNE METER W/ 25' ITRON CONNECTOR in 100 USG W/ FLANGE PAKS	6" X 18"	EU3E1G1SG61		EA	3		NO BID	

WATER	ITEM #	DESCRIPTION	SIZE	APPROVED PART #	ALTERNATE PART #	UNIT	EST. QTY. FY 26/27	BIDDER	UNIT PRICE	ESTIMATED DELIVERY TIME
		METER BOXES AND LIDS								
W	48	SIGMA RMB-132418-SW W/ LC1324T-D READ DOOR AND RECESS TOUCH READ HOLE	5/8" x 3/4" meters	RMB- 132418-SW	OLD CASTLE 1324X18 /DI65-45-12	EA	50	CORE & MAIN	205.6	7-28 DAYS
W	49	SIGMA RMB-173018-SW W/ LC1730T-D READ DOOR AND RECESS TOUCH READ HOLE	1" - 2" meters	RMB- 173018-SW	OLD CASTLE 1730X18/DI65-45-12	EA	25		326.98	7-28 DAYS
W	50	SIGMA LID ONLY LC1324T-D READ DOOR AND RECESS TOUCH READ HOLE	5/8" x 3/4" meters	RMB-1324-L-RT	TRI CAST LID DI 6545-12 W/ READ DOOR /TRANS HOLE1324	EA	10		$109.57	7-28 DAYS
W	51	SIGMA LID ONLY LC1730T-D READ DOOR AND RECESS TOUCH READ HOLE	1" - 2" meters	RMB-1730-L-RT	TRI CAST LID DI 6545-12 W/ READ DOOR /TRANS HOLE1730	EA	10		$187.18	7-28 DAYS
W	55	CI SOLID METER BOX LID W/ ITRON TR HOLE FOR BROOKS 36H15 METER BOX LID ONLY	CI SOLID LID FOR BROOKS 36HI5	LC 223T ITRON	n/a	EA	25		29.35	7-28 DAYS

WATER MATERIALS BID LIST 2025-2026

		*1324 AND 1730 BOXES SHALL COME W/LID READER DOOR AND RECESS TOUCH READ HOLE		LC1324T-D/1730T-D	Tricast DI w/ read door /trans hole 1324/1730					
WATER	ITEM #	DESCRIPTION	SIZE	APPROVED PART #	ALTERNATE PART #	UNIT	EST. QTY. FY 26/27	BIDDER	UNIT PRICE	ESTIMATED DELIVERY TIME
		VAULTS								
W	56	METER VAULT W/ ALUMINUM LID	2" METER VAULT	SEE DRAWING			2		NO BID	
WATER	ITEM #	DESCRIPTION	SIZE	APPROVED PART #	ALTERNATE PART #	UNIT	EST. QTY. FY 26/27	BIDDER	UNIT PRICE	ESTIMATED DELIVERY TIME
		BRASS FITTINGS								
W	59	BRASS REDUCTION COUPLING	2" X 1.5"	B-RC0807		EA	2	CORE & MAIN	$32.30	7-28 DAYS
W	60	ROUGH BRASS 45° COUPLING	1.5"	BR4L		EA	2		$22.30	7-28 DAYS
W	61	ROUGH BRASS 90° COUPLING	1.5"	BR9L		EA	2		$20.19	7-28 DAYS
W	64	FEMALE THREAD BALL VALVE; FORD	3/4"	B11-233W-NL		EA	10		$57.00	7-28 DAYS
W	65	BRASS TEE	2"x2"x2"	NSF61-4		EA	10		$45.50	7-28 DAYS
W	66	BRASS THREADED 90°; MATCO	2"	NSF61-4		EA	10		$32.85	7-28 DAYS
W	67	BRASS THREADED STREET 90°; MATCO	2"	NSF61-4		EA	10		$48.00	7-28 DAYS
W	68	THREADED COUPLING; MATCO	2"	NSF61-4		EA	10		$28.32	7-28 DAYS
W	69	BRASS ALL-THREAD	1.5"			EA	2		$9.06	7-28 DAYS
W	70	BRASS NIPPLE	1.5" X 6"	BRNLU		EA	2		$25.83	7-28 DAYS
W	71	BRASS ALL THREAD; MATCO--NORCA	2"	NBR08CL		EA	20		$13.80	7-28 DAYS
W	72	BRASS NIPPLE; MATCO-NORCA	2" X 6" LONG	NBR086		EA	10		$33.21	7-28 DAYS
W	73	BRASS NIPPLE; BMI	2" X 12" LONG	7 77701049941		EA	10		$65.42	7-28 DAYS
W	74	BRASS NIPPLE	2" X 18" LONG			EA	6		$133.44	7-28 DAYS
W	75	BRASS NIPPLE	2" X 24" LONG			EA	6		$177.91	7-28 DAYS
W	76	CHECK VALVE; RED & WHITE	1.5"	236AB 1 1/2		EA	4		$36.62	7-28 DAYS
W	77	CHECK VALVE; RED & WHITE	2"	236AB 2		EA	4		$57.97	7-28 DAYS
W	78	APOLLO BALL VALVE	2"	A94ALF10801A		EA	6		$110.80	7-28 DAYS
WATER	ITEM #	DESCRIPTION	SIZE	APPROVED PART #	ALTERNATE PART #	UNIT	EST. QTY. FY 26/27	BIDDER	UNIT PRICE	ESTIMATED DELIVERY TIME
		COMPRESSION FITTINGS								
W	82	COUPLING; FMLIP; FORD	FMLIP 3/4" X 3/4" CTS	C14-33-Q-NL		EA	5	CORE & MAIN	$18.61	7-28 DAYS
W	83	COUPLING; FORD	3/4" CTS X 3/4" CTS	C44-33-Q-NL		EA	30		$21.19	7-28 DAYS
W	84	COUPLING; FORD	3/4" CTS PAK X 3/4" IP MALE	C84-33-Q-NL		EA	5		$17.37	7-28 DAYS
W	85	COUPLING; FORD	3/4" CTS PACK X 1" CTS PACK	C44-34-Q-NL		EA	30		$24.36	7-28 DAYS
W	86	COUPLING; FMLIP; FORD	FMLIP 1" X 1" CTS	C14-44-Q-NL		EA	15		$26.62	**7-28 DAYS**
W	87	COUPLING; FORD	1" CTS X 1" CTS	C44-44-Q-NL		EA	25		$23.11	7-28 DAYS
W	88	COUPLING; FORD	1" CTS X 1" I.P. MALE	C84-44-Q-NL		EA	6		$20.52	7-28 DAYS
W	89	COUPLING; FORD	2" CTS X 2" CTS JOINT PK	C44-77-Q-NL		EA	6		$110.06	7-28 DAYS
W	90	2" CTS X 2" IRON PIPE THREAD; FORD	2" CTS X 2" IRON PIPE THREAD	C84-77-Q-NL		EA	6		$82.66	7-28 DAYS
W	91	COUPLING; T'S ; FORD	3/4" X 3/4" X 3/4" CTS	T444-333-Q-NL		EA	20		$48.71	7-28 DAYS
W	92	COUPLING; T'S ; FORD	3/4" X 3/4" X 1" CTS	T444-443-Q-NL		EA	10		$57.93	7-28 DAYS
W	93	COUPLING; T'S; FORD	1" X 1" X 3/4"	T444-443-AWT-Q-NL		EA	5		$51.94	7-28 DAYS
W	94	COUPLING; T'S; FORD	1" X 1" X 1" CTS PAK JOINT	T444-444-Q-NL		EA	5		$67.54	7-28 DAYS
W	95	BALL VALVE; FORD	3/4"	B44-233W-Q-NL		EA	20		$77.67	7-28 DAYS
W	96	BALL VALVE; FORD	1"	B44-344W-Q-NL		EA	20		$116.73	7-28 DAYS
W	97	COUPLING; "Y"; FORD	3/4" X 3/4" X 1" CTS	Y44-243-Q-NL		EA	25		$41.69	7-28 DAYS
W	98	90° COUPLING; FORD	3/4"	L44-33-Q-NL		EA	5		$26.05	7-28 DAYS
W	99	90° COUPLING; FORD	1"	L44-44-Q-NL		EA	5		$33.44	7-28 DAYS
W	100	Q -NUT ASSEMBLY	3/4"	QJN4-3		EA	20		$7.96	7-28 DAYS
W	101	Q-NUT ASSEMBLY	1"	QJN4-4		EA	20		$12.69	7-28 DAYS
W	102	FEMALE COPPER THREAD GRIP JOINT; FORD	3/4" X 3/4" CTS	C04-33-Q-NL		EA	5		$28.25	7-28 DAYS
W	103	FEMALE COPPER THREAD GRIP JOINT; FORD	1" X 1" CTS	C04-44-Q-NL		EA	5		$41.50	7-28 DAYS
W	104	PAK J ASSEMBLY; FORD	1" FEMALE X 3/4" CTS	C08-43-NL		EA	5		$31.69	7-28 DAYS
W	105	COUPLING SWIVEL 45 DEGREE; FORD	3/4"X3/4"	LA04-33S-Q-NL		EA	5		$72.47	7-28 DAYS
W	106	COUPLING SWIVEL 45 DEGREE; FORD	1"X1"	LA04-44S-Q-NL		EA	5		$84.50	7-28 DAYS
W	107	COUPLING SWIVEL 90 DEGREE; FORD	3/4"X3/4"	L04-33S-Q-NL		EA	5		$58.36	7-28 DAYS
W	108	COUPLING SWIVEL 90 DEGREE; FORD	1"X1"	L04-44S-Q-NL		EA	5		$75.82	7-28 DAYS
W	109	MULTI SERVICE Y NL 1-2" FMLIP X 4-1" FMLIP	2"X1"	Y11-474-NL		EA	5		$102.66	7-28 DAYS
WATER	ITEM #	DESCRIPTION	SIZE	APPROVED PART #	ALTERNATE PART #	UNIT	EST. QTY. FY 26/27	BIDDER	UNIT PRICE	ESTIMATED DELIVERY TIME
		CURB STOPS								
W	113	CURB STOP W/360 DEGREE LOCKING WINGNUT; FORD	3/4"	B43-232WR-Q-NL		EA	200	CORE & MAIN	$80.03	7-28 DAYS
W	114	CURB STOP W/360 DEGREE LOCKING WINGNUT; FORD	1"	B43-344WR-Q-NL		EA	25		$100.41	7-28 DAYS
W	115	BALL VALVE PAD WING/CURB STOP; FORD	1.5"	BF13-666W-NL		EA	4		$184.51	7-28 DAYS
W	116	BALL VALVE PAD WING/CURB STOP; FORD	2"	BF13-777W-NL		EA	4		$294.10	7-28 DAYS
W	117	BALL VALVE PAD WING W/COMPRESSION FITTING; FORD	2"	BF43-777W-Q-NL		EA	6		$364.54	7-28 DAYS

WATER MATERIALS BID LIST 2025-2026

WATER	ITEM #	DESCRIPTION	SIZE	APPROVED PART #	ALTERNATE PART #	UNIT	EST. QTY. FY 26/27	BIDDER	UNIT PRICE	ESTIMATED DELIVERY TIME
		CORP STOPS								
W	122	CORPORATION STOP; FORD	3/4" TAPER X 3/4" CTS	FB1000-3-Q-NL		EA	10	CORE & MAIN	$55.95	7-28 DAYS
W	123	CORPORATION STOP; FORD	1" CC TAPER x 1"CTS	FB1000-4-Q-NL		EA	20		$73.61	7-28 DAYS
W	124	CORPORATION STOP, IRON PIPE THREADS; FORD	1" IP THREAD X1" CTS	FB1100-4-Q-NL		EA	5		$73.61	**7-28 DAYS**

WATER	ITEM #	DESCRIPTION	SIZE	APPROVED PART #	ALTERNATE PART #	UNIT	EST. QTY. FY 26/27	BIDDER	UNIT PRICE	ESTIMATED DELIVERY TIME
		TAPPING SADDLES								
W	143	TAPPING SADDLE; SMITH BLAIR	2" X 3/4" (2.35-2.56)	315-00025607-000		EA	5	CORE & MAIN	$27.87	7-28 DAYS
W	144	TAPPING SADDLE; SMITH BLAIR	2" X 1" (2.35-2.56)	315-00025609-000		EA	4		$27.87	7-28 DAYS
W	145	TAPPING SADDLE; SMITH BLAIR	2-1/4" X 3/4" (2.44-2.91)	315-00029107-000		EA	5		$49.70	7-28 DAYS
W	146	TAPPING SADDLE; SMITH BLAIR	2-1/4" X 1" (2.44-2.91)	315-00029109-000		EA	5		$28.44	7-28 DAYS
W	149	TAPPING SADDLE; SMITH BLAIR	4" X 3/4" (4.40-4.80)	315-00048007-000		EA	4		$27.82	7-28 DAYS
W	151	TAPPING SADDLE; SMITH BLAIR	4" X 1" (4.40-4.80)	315-00048009-000		EA	4		$34.85	7-28 DAYS
W	155	TAPPING SADDLE; SMITH BLAIR	4" X 2" (4.40-4.80)	315-00048014-000		EA	4		$34.85	7-28 DAYS
W	158	TAPPING SADDLE; SMITH BLAIR	6" X 3/4" (6.84-7.60)	315-00076007-000		EA	5		$32.73	7-28 DAYS
W	160	TAPPING SADDLE ; SMITH BLAIR	6" X 1" (5.94-6.90)	315-00069009-000		EA	5		$32.22	7-28 DAYS
W	161	TAPPING SADDLE; SMITH BLAIR	6" X 1" (6.84-7.60)	315-00076009-000		EA	5		$32.73	7-28 DAYS
W	163	TAPPING SADDLE; SMITH BLAIR	6" X 2" (5.94-6.90)	315-00069014-000		EA	5		$37.85	7-28 DAYS
W	165	TAPPING SADDLE ; SMITH BLAIR	6"x2" (6.84-7.60)	315-00076014-000		EA	5		$38.35	7-28 DAYS
W	166	TAPPING SADDLE ; SMITH BLAIR	8" X 3/4" (8.54-10.10)	315-00101007-000		EA	5		$38.86	7-28 DAYS
W	167	TAPPING SADDLE; SMITH BLAIR	8" X 1" (8.54-10.10)	315-00101009-000		EA	4		$38.86	7-28 DAYS
W	171	TAPPING SADDLE; SMITH BLAIR	8" X 2" (8.54-10.10)	315-00101014-000		EA	2		$46.17	**7-28 DAYS**
W	175	TAPPING SADDLE; SMITH BLAIR	10" X 2" (10.64-12.12)	315-00121214-00		EA	4		$51.86	7-28 DAYS
W	176	TAPPING SADDLE; SMITH BLAIR	12" X 3/4" (12.64-14.32)	315-00143207-000		EA	2		$49.10	7-28 DAYS
W	178	TAPPING SADDLE; SMITH BLAIR	12" X 1" (12.62-14.32)	315-00143209-000		EA	2		$49.10	7-28 DAYS
W	180	TAPPING SADDLE; SMITH BLAIR	12"-14"X 2" (12.62-14.32)	315-00143214-000		EA	2		$61.88	7-28 DAYS
W	181	TAPPING SADDLE; SMITH BLAIR	16"- X 2" (17.25-17.80)	317-00178014-000		EA	2		$134.33	7-28 DAYS
W	182	TAPPING SADDLE; SMITH BLAIR	16"- X 2" (17.25-17.80)	317-00195014-000		EA	2		$175.20	7-28 DAYS
W	183	TAPPING SADDLE:SMITH BLAIR	20"X2" (21.55-21.65)	317-00216014-000		EA	2		$203.68	7-28 DAYS
W	184	TAPPING SADDLE; SMITH BLAIR	24" X 2" (25.75-25.85)	317-00258014-000		EA	2		**$231.85**	7-28 DAYS

WATER	ITEM #	DESCRIPTION	SIZE	APPROVED PART #	ALTERNATE PART #	UNIT	EST. QTY. FY 26/27	BIDDER	UNIT PRICE	ESTIMATED DELIVERY TIME
		REPAIR CLAMPS								
W	188	REPAIR CLAMP; SMITH BLAIR	3/4" X 6" FL CIR			EA	2	CORE & MAIN	$37.62	7-28 DAYS
W	189	REPAIR CLAMP; SMITH BLAIR	1" X 6" FL CIR (PVC)	244-00013206-000		EA	2		$38.66	7-28 DAYS
W	190	REPAIR CLAMP; SMITH BLAIR	1-1/4" X 6"	244-00016609-000		EA	4		$39.89	7-28 DAYS
W	191	REPAIR CLAMP; SMITH BLAIR	1.5" X 6" FL CIR (PVC)	244-00019006-000		EA	4		$39.89	7-28 DAYS
W	192	REPAIR CLAMP; SMITH BLAIR	2" X 7" FL CIR (2.35-2.63)	226-00023807-000		EA	8		$42.72	7-28 DAYS
W	193	REPAIR CLAMP; SMITH BLAIR	2.5" X 7" FL CIR (2.70-3.00)	226-00027507-000		EA	6		$43.74	7-28 DAYS
W	194	REPAIR CLAMP; SMITH BLAIR	2" X 12.5" FL CIR (2.35-2.63)	226-00023812-000		EA	2		$71.68	7-28 DAYS
W	195	REPAIR CLAMP; SMITH BLAIR	2.5" X 12" FL CIR (2.70-3.00)	226-00027512-000		EA	2		$75.30	7-28 DAYS
W	196	REPAIR CLAMP; SMITH BLAIR	2" X 15" (2.35-2.63)	226-00023815-000		EA	2		$82.69	7-28 DAYS
W	197	REPAIR CLAMP; SMITH BLAIR	2" X 25" (2.35-2.63)	226-00023825-000		EA	2		$147.65	7-28 DAYS
W	198	REPAIR CLAMP; SMITH BLAIR	2.25" X 25" (2.70-3.00)	226-00027525-000		EA	2		$158.47	7-28 DAYS
W	199	REPAIR CLAMP; SMITH BLAIR	3" X 7.5" FL CIR (3.73-4.00)	226-00037507-000		EA	2		$49.02	7-28 DAYS
W	200	REPAIR CLAMP; SMITH BLAIR	3" X 12" FL CIR (3.46-3.70)	226-00035012-000		EA	2		$79.39	7-28 DAYS
W	201	REPAIR CLAMP; SMITH BLAIR	4" X 7.5" FL CIR (3.96-4.25)	226-00040007-000		EA	2		$50.77	7-28 DAYS
W	202	REPAIR CLAMP; SMITH BLAIR	4" X 7.5" FL CIR (4.45-4.73)	226-00045007-000		EA	2		$52.56	7-28 DAYS
W	203	REPAIR CLAMP; SMITH BLAIR	4" X 7.5" FL CIR (4.74-5.14)	226-00048007-000		EA	6		$54.40	7-28 DAYS
W	204	REPAIR CLAMP; SMITH BLAIR	4 X 12.5" FL CIR (4.74-5.14)	226-00048012-000		EA	2		$89.15	7-28 DAYS
W	205	REPAIR CLAMP; SMITH BLAIR	4 X 15" FL CIR (PVC) (4.74-5.14)	226-00048015-000		EA	2		$107.55	7-28 DAYS
W	207	REPAIR CLAMP; SMITH BLAIR	6" X 7" FL CIR (6.84-7.24)	226-00069007-000		EA	10		$64.20	7-28 DAYS
W	208	REPAIR CLAMP; SMITH BLAIR	6" X 7.5" FL CIR (6.56-6.96)	226-00066307-000		EA	4		$62.82	7-28 DAYS
W	210	REPAIR CLAMP; SMITH BLAIR	6" X 12" FL CIR (6.56-6.96)	226-00066312-000		EA	2		$101.20	7-28 DAYS
W	211	REPAIR CLAMP; SMITH BLAIR	6" X 12" FL CIR (6.84-7.24)	226-00069012-000		EA	4		$102.68	7-28 DAYS
W	212	REPAIR CLAMP; SMITH BLAIR	6" X 12.5" (7.05-7.45)	226-00071012-000		EA	2		$104.37	7-28 DAYS
W	213	REPAIR CLAMP; SMITH BLAIR	6" X 15" FL CIR (6.56-6.96)	226-00066315-000		EA	2		$113.89	7-28 DAYS
W	214	REPAIR CLAMP; SMITH BLAIR	6" X 15" (6.84-7.24)	226-00069015-000		EA	2		$119.33	7-28 DAYS
W	215	REPAIR CLAMP; SMITH BLAIR	6" X 15" (7.05-7.45)	226-00071015-000		EA	2		$120.88	7-28 DAYS
W	217	REPAIR CLAMP; SMITH BLAIR	8" X 7" FL CIR (8.54-8.94)	226-00086307-000		EA	4		$74.44	7-28 DAYS
W	218	REPAIR CLAMP; SMITH BLAIR	8" X 7" FL CIR (8.99-9.39)	226-00090507-000		EA	8		$76.80	7-28 DAYS
W	219	REPAIR CLAMP; SMITH BLAIR	8" X 12" FL CIR (8.99-9.39, DIP)	226-00090512-000		EA	2		$122.98	7-28 DAYS
W	220	REPAIR CLAMP; SMITH BLAIR	8" X 15" (8.54-8.94)	226-00086315-000		EA	2		$142.33	7-28 DAYS
W	221	REPAIR CLAMP; SMITH BLAIR	8" X 15" (8.99-9.39)	226-00090515-000		EA	2		$146.55	7-28 DAYS
W	222	REPAIR CLAMP; SMITH BLAIR	10" X 15" FL CIR (DIP) (11.04-11.44)	226-00111015-000		EA	2		$182.99	7-28 DAYS
W	223	REPAIR CLAMP; SMITH BLAIR	10" X 20" (11.04-11.44)	226-00114020-000		EA	2		$253.63	7-28 DAYS
W	224	REPAIR CLAMP; SMITH BLAIR	12" X 7" FL CIR (13.10-13.50)	226-00132007-000		EA	2		$105.44	7-28 DAYS

W	225	REPAIR CLAMP; SMITH BLAIR	12" X 12" FL CIR (DIP) (13.10-13.50)	226-00132012-000		EA	2		$169.69	7-28 DAYS
W	226	REPAIR CLAMP; SMITH BLAIR	12' X 15' FL CIR (DIP) (13.10 - 13.50)	226-00132015-000		EA	2		$210.86	7-28 DAYS
W	227	REPAIR CLAMP; SMITH BLAIR	16" X 15" (17.15-17.90)	228-20171515-000		EA	2		$437.72	7-28 DAYS
W	229	REPAIR CLAMP; SMITH BLAIR	16" X 20" FL CIR (17.15-17.90)	228-20178220-000		EA	2		$603.89	7-28 DAYS
W	230	REPAIR CLAMP; SMITH BLAIR	16" X 30" (17.15-17.90)	228-20171530-000		EA	2		$898.59	7-28 DAYS
W	231	REPAIR CLAMP; SMITH BLAIR	18" X 20" FL CIR (19.23-19.98)	228-20192320-000		EA	2		625.94	7-28 DAYS
W	232	REPAIR CLAMP; SMITH BLAIR	20" X 20" (21.52-22.27)	228-20215220-000		EA	2		$662.84	7-28 DAYS
W	233	REPAIR CLAMP; SMITH BLAIR	24" X 30" FL CIR (25.70-26.80)	228-30257030-000		EA	2		$1,715.56	7-28 DAYS
W	234	REPAIR CLAMP; SMITH BLAIR	24" X 20" FL CIR (25.70-26.80)	228-30257020-000		EA	2		$1,133.79	7-28 DAYS
W	237	REPAIR CLAMP; SMITH BLAIR W/1" CC TAP	6"X7.5" W/1" TAP (6.84-7.24)	238-00069007-009		EA	2		$90.19	7-28 DAYS
W	238	REPAIR CLAMP; SMITH BLAIR W/1" CC TAP	8"X7.5" W/ 1" TAP (8.99-9.39)	238-00090507-009					$102.80	7-28 DAYS

WATER	ITEM #	DESCRIPTION	SIZE	APPROVED PART #	ALTERNATE PART #	UNIT	EST. QTY. FY 26/27	BIDDER	UNIT PRICE	ESTIMATED DELIVERY TIME
		HYMAX								
W	240	HYMAX; KRAUSZ	1.5" (1.61-2.13)	860-56-0041-16		EA	4	CORE & MAIN	$148.16	7-28 DAYS
W	241	HYMAX; KRAUSZ	2" (2.10-3.03)	860-56-0054-16		EA	4		$156.22	7-28 DAYS
W	242	HYMAX; KRAUSZ	3" (3.46-4.33)	860-56-0088-16		EA	4		$206.07	7-28 DAYS
W	243	HYMAX; KRAUSZ	4" (4.25-5.63)	860-56-0108-16C		EA	4		$264.05	7-28 DAYS
W	244	HYMAX; KRAUSZ	6" (6.42-7.68)	860-56-0163-16		EA	10		$349.70	7-28 DAYS
W	245	HYMAX; KRAUSZ	8" (8.54-9.84)	860-56-0217-16		EA	10		$394.82	7-28 DAYS
W	246	HYMAX; KRAUSZ	10" (10.70 - 12.00)	860-56-0272-16		EA	2		$507.90	7-28 DAYS
W	247	HYMAX; KRAUSZ	12" (12.40-13.66)	860-56-0315-16		EA	2		$599.49	7-28 DAYS

WATER	ITEM #	DESCRIPTION	SIZE	APPROVED PART #	ALTERNATE PART #	UNIT	EST. QTY. FY 26/27	BIDDER	UNIT PRICE	ESTIMATED DELIVERY TIME
		PIPE								
W	254	PEX PIPE; REHAU 300 ft. Roll	3/4"	261056-100	n/a	FT	2000	CORE & MAIN	$1.53	7-28 DAYS
W	255	PEX PIPE; REHAU 300 ft. roll	1"	261076-300	n/a	FT	4000		$2.31	7-28 DAYS
W	256	PEX PIPE; REHAU 300 ft. roll	2"		n/a	FT	300		$14.32	7-28 DAYS
W	258	CL-350 DUCTILE IRON WATER PIPE W/ BITUMINOUS SEAL COATING INSIDE & OUTSIDE	3"	CL-350	n/a	FT	60		$73.96	7-28 DAYS
W	263	CL-350 DUCTILE IRON WATER PIPE W/ BITUMINOUS SEAL COATING INSIDE & OUTSIDE	12"	CL-350	n/a	FT	40		$56.20	7-28 DAYS
W	264	CL-350 DUCTILE IRON WATER PIPE W/ BITUMINOUS SEAL COATING INSIDE & OUTSIDE	16"	CL-350	n/a	FT	40		$90.95	7-28 DAYS
W	265	CL-350 DUCTILE IRON WATER PIPE W/ BITUMINOUS SEAL COATING INSIDE & OUTSIDE	18"	CL-350	n/a	FT	40		$107.26	7-28 DAYS
W	266	CL-350 DUCTILE IRON WATER PIPE W/ BITUMINOUS SEAL COATING INSIDE & OUTSIDE	24"	CL-350	n/a	FT	40		$170.32	7-28 DAYS
W	267	CL-350 DUCTILE IRON WATER PIPE W/ BITUMINOUS SEAL COATING INSIDE & OUTSIDE	36"	CL-350	n/a	FT	40		$395.56	7-28 DAYS
W	268	C900 WATER PIPE SDR 14	4"	C-900		FT	100		$6.62	7-28 DAYS
W	269	C900 WATER PIPE SDR 14	6"	C-900		FT	200		$13.29	7-28 DAYS
W	270	C900 WATER PIPE SDR 14	8"	C-900		FT	200		$22.88	7-28 DAYS
W	271	C900 WATER PIPE SDR 14	10"	C-900		FT	40		$34.87	7-28 DAYS
W	273	SDR 11, 2" IPS BLACK WATER PIPE	2"	SDR-11		FT	100		$2.25	7-28 DAYS

WATER	ITEM #	DESCRIPTION	SIZE	APPROVED PART #	ALTERNATE PART #	UNIT	EST. QTY. FY 26/27	BIDDER	UNIT PRICE	ESTIMATED DELIVERY TIME
		PIPE FITTINGS								
W	277	PIPE STIFFENER (PLASTIC)	3/4"			EA	1000	CORE & MAIN	$0.53	7-28 DAYS
W	278	PIPE STIFFENER (PLASTIC)	1"			EA	2000		$0.58	7-28 DAYS
W	279	PIPE INSERT; FORD # 55 STAINLESS STELL	2"			EA	14		$3.15	7-28 DAYS
W	293	CAP; TYLER	2"			EA	2		$72.28	7-28 DAYS
W	294	CAP; TYLER	3"			EA	2		$37.50	7-28 DAYS
W	295	CAP; TYLER	4"			EA	2		$38.87	7-28 DAYS
W	296	CAP; TYLER	4" X 2"			EA	2		$79.78	7-28 DAYS
W	297	CAP; TYLER	6"			EA	2		$68.19	7-28 DAYS
W	298	CAP; TYLER	6" X 2"			EA	2		$109.10	7-28 DAYS
W	299	CAP; TYLER	8"			EA	2		$111.14	7-28 DAYS
W	300	CAP; TYLER	8" X 2"			EA	2		$151.37	7-28 DAYS
W	345	ANCHOR COUPLING; TYLER	6" X 13" LONG			EA	6		$270.69	7-28 DAYS
W	346	ANCHOR COUPLING; TYLER	6" X 18" LONG			EA	6		$298.64	7-28 DAYS
W	347	ANCHOR COUPLING; TYLER	6" X 24" LONG			EA	6		$402.96	7-28 DAYS

WATER	ITEM #	DESCRIPTION	SIZE	APPROVED PART #	ALTERNATE PART #	UNIT	EST. QTY. FY 26/27	BIDDER	UNIT PRICE	ESTIMATED DELIVERY TIME
		ACCESSORIES								
W	389	M.J. ACC KIT; UFCO	3"	912-096-5892		EA	4	CORE & MAIN	$27.28	7-28 DAYS
W	390	M.J. ACC KIT; SIGMA	4"	DGP 4"		EA	5		$35.46	7-28 DAYS
W	391	M.J. BOLT PACK SET	6"	SIP 6"		EA	10		$47.73	7-28 DAYS
W	392	M.J. BOLT PACK SET	8"	SIP 8"		EA	4		$53.19	7-28 DAYS
W	393	M.J. ACC KIT; SIGMA	10"	DGP 10		EA	2		$75.69	7-28 DAYS
W	394	M.J. ACC KIT	12"			EA	4		$77.73	7-28 DAYS
W	395	M.J. ACC KIT	16"			EA	4		$126.82	7-28 DAYS
W	397	TRANSITION GASKET	4"			EA	4		$10.91	7-28 DAYS
W	398	TRANSITION GASKET	6"			EA	8		$11.60	7-28 DAYS

W	399	TRANSITION GASKET	8"			EA	6		$15.69	7-28 DAYS
W	400	MEGALUG D. I.; FORD	3"	UFR 1500-SA-3-I		EA	4		$46.91	7-28 DAYS
W	401	MEGALUG AND ACC KIT (D I); SIGMA	4"	829,805,219,567		EA	4		$50.82	7-28 DAYS
W	402	MEGALUG AND ACC KIT (D I); SIGMA	6"	UFR 1400-DA-6		EA	4		$63.04	7-28 DAYS
W	403	MEGALUG AND ACC KIT (D I); EBAA	8"	110 804 1903		EA	2		$86.01	7-28 DAYS
W	404	MEGALUG AND ACC KIT (D I); EBAA	10"	1,110,041,903		EA	2		$121.68	7-28 DAYS
W	405	MEGALUG AND ACC KIT (D I); FORD	12"	UFR 1400-DA-12-I		EA	2		$163.70	7-28 DAYS
W	406	MEGALUG AND ACC KIT (D I)	16"			EA	4		$371.86	7-28 DAYS
W	407	MEGALUG AND ACC KIT (D I)	24"			EA	2		$639.63	7-28 DAYS
W	408	MEGALUG AND ACC KIT (D.I.)	36"			EA	2		$2,064.00	7-28 DAYS
W	412	MEGALUG AND ACC KIT (C900); SIGMA	4"	829,805,219,864		EA	10		$58.64	7-28 DAYS
W	413	MEGALUG AND ACC KIT (C900); SIGMA	6"	829 805 219 871		EA	40		$73.30	7-28 DAYS
W	414	MEGALUG AND ACC KIT (C900); SIGMA	8"	829 805 219 888		EA	30		$98.71	7-28 DAYS
W	415	C900 MEGALUG; EBAA	10"	2,010,161,903		EA	6		$172.01	7-28 DAYS
W	416	C900 MEGALUG; SIGMA	12"	829 052 199 01		EA	6		$180.31	7-28 DAYS
W	417	MEGALUG AND ACC KIT ((DI)	18"			EA	4		$396.78	7-28 DAYS
W	418	MEGALUG AND ACC KIT (D I)	20"			EA	4		$484.24	7-28 DAYS

WATER	ITEM #	DESCRIPTION	SIZE	APPROVED PART #	ALTERNATE PART #	UNIT	EST. QTY. FY 26/27	BIDDER	UNIT PRICE	ESTIMATED DELIVERY TIME
		VALVES								
W	423	GATE VALVE - THREADED; KENNEDY	2"	228D2X		EA	10	CORE & MAIN	**469.51**	7-28 DAYS
W	424	GATE VALVE; KENNEDY	3"	324,067,014,001		EA	2		$688.53	7-28 DAYS
W	425	GATE VALVE' M&H	4"	367,571,011,008		EA	2		$769.51	7-28 DAYS
W	426	GATE VALVE; M&H	6"	467,571,011,008		EA	5		$981.51	7-28 DAYS
W	427	TAPPING VALVE; MUELLER	6"	4,187,696		EA	2		$1,371.00	7-28 DAYS
W	428	GATE VALVE; MUELLER	8"	080A236023LN		EA	5		$1,563.72	7-28 DAYS
W	429	GATE VALVE	10"			EA	1		$2,438.00	7-28 DAYS
W	430	GATE VALVE; M&H	12"	587,571,011,008		EA	1		$3,085.00	7-28 DAYS
W	431	GATE VALVE; MUELLER	16"	11,505,876,777		EA	1		$8,422.06	7-28 DAYS

WATER	ITEM #	DESCRIPTION	SIZE	APPROVED PART #	ALTERNATE PART #	UNIT	EST. QTY. FY 26/27	BIDDER	UNIT PRICE	ESTIMATED DELIVERY TIME
		VALVE BOXES/RISERS								
W	436	SQUARE VALVE BOX CASTING & LID		JBS 8006		EA	15	CORE & MAIN	**223.53**	7-28 DAYS
W	437	SQUARE STEEL VALVE BOX RISER	1.5"	JBS 8006		EA	5		**141.18**	7-28 DAYS
W	438	CONCRETE VALVE BOX RISER	2"			EA	15		$114.76	7-28 DAYS
W	439	CONCRETE VALVE BOX RISER	4"			EA	15		$19.00	7-28 DAYS
W	440	CONCRETE VALVE BOX RISER	6"			EA	15		$29.00	**7-28 DAYS**
W	441	CONCRETE VALVE BOX RISER	12"			EA	10		$41.00	7-28 DAYS
W	442	CONCRETE VALVE BOX RISER	18"			EA	10		$43.00	7-28 DAYS
W	500	VALVE BOX EXTENSION; SIGMA	1"	VBR-1		EA	25	CORE & MAIN	$19.06	7-28 DAYS
W	501	VALVE BOX EXTENSION; SIGMA	1.5"	VBR-1.5		EA	25		$23.30	7-28 DAYS
W	502	VALVE BOX EXTENSION; SIGMA	2"	VBR-2		EA	30		$23.30	7-28 DAYS
W	503	VALVE BOX EXTENSION; SIGMA	3"	VBR-3		EA	25		$31.77	7-28 DAYS
W	504	VALVE BOX EXTENSION; SIGMA	4"	VBR-4		EA	25		$37.06	7-28 DAYS
W	505	VALVE BOX EXTENSION; SIGMA	6"	VBR-6		EA	25		$52.95	7-28 DAYS
		HIGHLIGHTED PORTION IS ALSO ON THE GAS BID (G-232-237)	***PLEASE ALSO BID ON GAS (G-232-237) AS WELL***	***PLEASE ALSO BID ON GAS (G-232-237) AS WELL***						

WATER	ITEM #	DESCRIPTION	SIZE	APPROVED PART #	ALTERNATE PART #	UNIT	EST. QTY. FY 26/27	BIDDER	UNIT PRICE	ESTIMATED DELIVERY TIME
		HYDRANTS								
W	448	BLOW OFF-ABOVE GROUND; KUPFERLE	2" STRAIGHT BURY	MODEL 77		EA	8	CORE & MAIN	**1117.27**	7-28 DAYS
W	449	BLOW OFF-BELOW GROUND; KUPFERLE	2" STRAIGHT BURY	MODEL 78		EA	5		$1,070.82	7-28 DAYS
W	450	POST HYDRANT,	3' BURY, 3" MJ SHOE, 2-1/2" OUTLET	M&H MODEL 33		EA	2		$1,347.37	7-28 DAYS
W	451	FIRE HYDRANT ASSEMBLY; M&H YELLOW	5 1/4" 3' 6"bury	MODEL 129 3-Way 1 Pumper/2 Hose		EA	6		$3,113.75	7-28 DAYS
W	452	HYDRANT TRAFFIC REPAIR KIT ; MUELLER	5 1/4"	MUELLER HRP301		EA	5		$392.23	7-28 DAYS
W	453	HYDRANT TRAFFIC REPAIR KIT ; AMERICAN	5 1/4"	AMERICAN AD-B62B-KIT		EA	1		NO BID	7-28 DAYS
W	454	HYDRANT TRAFFIC REPAIR KIT ; M&H	5 1/4"	M&H		EA	5		$320.41	7-28 DAYS
W	458	MUELLER EXTENSION KIT	5 1/4" X 6"			EA	1		$855.56	7-28 DAYS
W	459	MUELLER EXTENSION KIT	5 1/4" X 12"	A320-010		EA	1		$1,007.78	7-28 DAYS
W	460	MUELLER EXTENSION KIT	5 1/4" X 18"	A320-16		EA	1		$1,141.12	7-28 DAYS
W	461	MUELLER EXTENSION KIT	5 1/4" X 24"	A320-20		EA	1		$1,282.23	7-28 DAYS
W	462	M&H EXTENSION KIT	5 1/4" X 6"			EA	1		$655.50	7-28 DAYS
W	463	M&H EXTENSION KIT	5 1/4" X 12"	441129-5-12		EA	1		$765.07	7-28 DAYS
W	464	M&H EXTENSION KIT	5 1/4" X 18"	441129-5-18		EA	1		$868.94	7-28 DAYS
W	465	M&H EXTENSION KIT	5 1/4" X 24"	441129-5-24		EA	1		$943.67	7-28 DAYS

WATER	ITEM #	DESCRIPTION	SIZE	APPROVED PART #	ALTERNATE PART #	UNIT	EST. QTY. FY 26/27	BIDDER	UNIT PRICE	ESTIMATED DELIVERY TIME

WATER MATERIALS BID LIST 2025-2026

		INSERT VALVE & SLEEVES								
W	480	INSERT VALVE & SLEEVE W/ INSTALLATION	6"	HYDRO-STOP INSTA-VALVE 250 PATROIT	ROMAC	EA	1		NO BID	
W	481	INSERT VALVE & SLEEVE W/ INSTALLATION	8"	HYDRO-STOP INSTA-VALVE 250 PATROIT	ROMAC	EA	1		NO BID	
W	482	INSERT VALVE & SLEEVE W/ INSTALLATION	10"	HYDRO-STOP INSTA-VALVE 250 PATROIT	ROMAC	EA	1		NO BID	
W	483	INSERT VALVE &SLEEVE W/ INSTALLATION	12"	HYDRO-STOP INSTA-VALVE 250 PATROIT	ROMAC	EA	1		NO BID	
W	484	INSERT VALVE & SLEEVE W/ INSTALLATION	16"	HYDRO-STOP INSTA-VALVE 250 PATROIT		EA	1		NO BID	

SEWER MATERIAL BID LIST 2025-2026

		Smyrna							
		S = SEWER							
S	ITEM #	DESCRIPTION	SIZE	APPROVED PART #	ALTERNATE PART #	UNIT	EST. QTY. FY 26/27	BIDDER	UNIT PRICE
		RECLAIMED: METER BOXES and ACCESSORIES							
S	51	36H COMCRETE BOX METER BOX BODY ONLY		36H			6		NO BID
S	52	CI LID "SEWER" FOR 36H BOX		36T CI LID SEWER			6	CORE & MAIN	$31.77
S	53	RECLAIMED WATER SQUARE VALVE BOX CASTING & LID		JBS 8006		EA	4		$245.89
S	54	SEWER SQUARE CLEANOUT CASTING & LID		JBS 8006		EA	6		$212.95
S	ITEM #	DESCRIPTION	SIZE	APPROVED PART #	ALTERNATE PART #	UNIT	EST. QTY. FY 26/27	BIDDER	UNIT PRICE
		MANHOLES							
S	58	MANHOLE CASTING/LID; JBS WATER TIGHT W/ T BAR	26"	JBS 1123		EA	2	CORE & MAIN	$1,138.83
S	59	MANHOLE CASTING/LID; JBS	26"	JBS 1150		EA	2		$485.89
S	61	CONCRETE MANHOLE RISER	4"			EA	5		$94.12
S	62	CONCRETE MANHOLE RISER	6"			EA	5		$104.71
S	63	CONCRETE MANHOLE RISER	12"			EA	5		NO QUOTE
S	64	MANHOLE RISER RING SOLID-CAST IRON	24"x1.5"			EA	5		$244.71
S	65	MANHOLE RISER RING SOLID-CAST IRON	26" x1.5"			EA	5		$244.71
S	ITEM #	DESCRIPTION	SIZE	APPROVED PART #	ALTERNATE PART #	UNIT	EST. QTY. FY 26/27	BIDDER	UNIT PRICE
		PIPE							
s	71	CTS ROLL REUSE PIPE (500' ROLLS) (PURPLE)	1"			FT	500	CORE & MAIN	
s	72	CTS ROLL REUSE PIPE (500' ROLLS) (PURPLE)	2"			FT	500		$10.66
S	73	SEWER PIPE SCH 40	4"			FT	200		$3.45
S	74	C-900 REUSE WATER PIPE	4"			FT	50		$6.33
S	75	C-900 PURPLE PIPE	6"			FT	40		$12.73
S	77	SDR 21 SEWER PIPE	6"			FT	100		$8.00
S	78	SDR 26 SEWER PIPE	6"			FT	100		$6.11
S	80	CL 350 DUCTILE IRON SEWER PIPE W/ PROTECTO 401 LINING OR APPROVED EQUAL	8"			FT	50		$64.78
S	81	C900 REUSE WATER PIPE	8"			FT	40		$21.91
S	82	SDR 21 SEWER PIPE	8"			FT	100		$13.45
S	83	SDR 26 SEWER PIPE	8"			FT	100		$11.06
S	84	SDR 35 SEWER PIPE	8"			FT	20		$8.35
S	85	SDR 35 SEWER PIPE	10"			FT	20		$12.98
S	86	C900 REUSE WATER PIPE	12"			FT	20		$47.20
S	87	SDR 26 SEWER PIPE	12"			FT	100		$27.62
S	88	SDR11 IPS HDPE PIPE (RE-USE)	6"			FT	20		NO QUOTE
S	89	SDR11 IPS HDPE PIPE (RE-USE)	8"			FT	20		NO QUOTE
S	92	SDR 26 SEWER PIPE	15"			EA	20		$37.20
S	93	CL 350 DUCTILE IRON SEWER PIPE W/ PROTECTO 401 LINING OR APPROVED EQUAL	20"			EA	20		$185.66
S	ITEM #	DESCRIPTION	SIZE	APPROVED PART #	ALTERNATE PART #	UNIT	EST. QTY. FY 26/27	BIDDER	UNIT PRICE
		REPAIR CLAMPS							
S	96	SEWER REPAIR CLAMP;JCM	8" x 12" LONG (8.20-8.60)	101-0840-12		EA	2		NO QUOTE
S	97	SEWER REPAIR CLAMP; ROMAC	12" (12.10 - 12.50)	171-125012000		EA	2		NO QUOTE
S	ITEM #	DESCRIPTION	SIZE	APPROVED PART #	ALTERNATE PART #	UNIT	EST. QTY. FY 26/27	BIDDER	UNIT PRICE

SEWER MATERIAL BID LIST 2025-2026

		TAPPING SADDLES							
S	102	ROMAC SEWER TAPPING SADDLE	(8.00-14.40)	218-66640		EA	2	CORE & MAIN	$225.72
S	ITEM #	DESCRIPTION	SIZE	APPROVED PART #	ALTERNATE PART #	UNIT	EST. QTY. FY 26/27	BIDDER	UNIT PRICE
		FITTINGS							
S	110	BRASS CLEAN-OUT CAP; MATCO-NORCA	4"	10082647091488		EA	15	CORE & MAIN	$17.43
S	111	PLASTIC CLEAN-OUT CAP	4"			EA	10		$4.32
S	112	GLUE FEMALE ADAPTOR; MULTI FITTINGS	4"			EA	15		$9.46
S	114	GLUE LONG SWEEP TEE WYE; CHARLOTTE	4"	6 11 942 03564 9		EA	10		$30.19
S	115	GLUE 45° FEMALE COUPLING; LASCO	4"	10 02552871829 6		EA	5		$8.54
S	116	GLUE COUPLING; GPK	4"			EA	10		$5.76
S	117	GLUE 22° FEMALE COUPLING; LASCO	4"			EA	5		$13.35
S	119	QUICK CAP	6"			EA	2		$5.32
S	120	GLUE FEMALE ADAPTOR	6"			EA	15		$33.54
S	122	BRASS CLEAN-OUT CAP; MATCO-NORCA	6"			EA	20		$36.82
S	123	PLASTIC CLEAN-OUT CAP	6"			EA	2		$21.70
S	124	GLUE COUPLING; GPK	6"			EA	6		$13.05
S	125	GLUE 45° WYE; MULTI FITTINGS	6"	22454 40306		EA	15		$41.81
S	126	GLUE 22° FEMALE COUPLING; MULTI FITTINGS	6"	22434 40969		EA	5		$25.97
S	127	GLUE 22° MALE/FEMALE COUPLING; GPK	6"			EA	5		$30.27
S	128	GLUE 45° MALE/FEMALE COUPLING; MULTI FITTINGS	6"	22454 40406		EA	10		$27.19
S	129	GLUE 45 DEGREE/FEMALE COUPLING; MULTI FITTINGS	6"	22454 40506		EA	5		$21.27
S	130	SPIGOT x HUB SDR 35 x SCH 40	6" X 4"			EA	5		$29.91
S	ITEM #	DESCRIPTION	SIZE	APPROVED PART #	ALTERNATE PART #	UNIT	EST. QTY. FY 26/27	BIDDER	UNIT PRICE
		GASKET COUPLINGS							
S	135	GASKET COUPLING; MULTI FITTINGS	6"			EA	2	CORE & MAIN	$36.54
S	136	GASKET 22° COUPLING; HARCO	6"			EA	2		$29.15
S	137	GASKET 45° COUPLING; HARCO	6"			EA	2		$30.05
S	138	GASKET 45° MALE/FEMALE; MULTI FITTINGS	6"			EA	2		$26.63
S	139	GASKET COUPLING; GPK	8"			EA	2		$62.02
S	142	WYE GASKET	8" X 6"			EA	2		$97.61
S	144	GASKET COUPLING; GPK	10"			EA	2		$137.63
S	145	GASKET COUPLING; GPK	12"	106-0012		EA	2		$199.96
S	147	GASKET COUPLING; IPEX	15"	043637		EA	2		$413.76
S	ITEM #	DESCRIPTION	SIZE	APPROVED PART #	ALTERNATE PART #	UNIT	EST. QTY. FY 26/27	BIDDER	UNIT PRICE
		FERNCOS							
S	152	COUPLING; FERNCO	4" CI/PVC X 4" CI/PVC	1056-44		EA	15	CORE & MAIN	$6.24
S	153	COUPLING; FERNCO	4" CONC X 4" CI/PVC	1006-44		EA	6		$6.74
S	154	COUPLING; FERNCO	4" CLAY X 4" PVC	1002-44		EA	6		$6.24
S	155	COUPLING; FERNCO	6" CLAY X 4" PVC	1001-64		EA	6		$15.64
S	156	COUPLING; FERNCO	6" CI/PVC X 4" CI/PVC	1056-64		EA	6		$15.64
S	157	COUPLING; FERNCO	6" CONC X 6" CI/PVC	1006-66		EA	6		$14.75
S	158	COUPLING; FERNCO	6" CLAY X 6" PVC	1002-66		EA	6		$13.32
S	159	COUPLING; FERNCO	6" CLAY X 6' CLAY	1001-66		EA	6		$14.39
S	160	COUPLING;FERNCO	6" CI/PVC X 6" CI/PVC	1056-66		EA	8		$13.32
S	161	COUPLING; FERNCO	6" AC or DI X 6" CI or PVC	1051-66		EA	2		$14.39
S	162	COUPLING; FERNCO	8" CI/PVC X 6" CI/PVC	1056-86		EA	2		$24.76
S	163	COUPLING; FERNCO	8" CI X 8" CI	1056-84		EA	2		$103.54
S	164	COUPLING; FERNCO	8" CONC X 8" CI/PVC	1006-68		EA	2		$99.76
S	165	COUPLING; FERNCO	8" CLAY X 8" PVC	1002-88		EA	2		$20.51
S	166	COUPLING; FERNCO	10" CI/PVC X 10" CI/PVC	1056-1010		EA	2		$30.79

SEWER MATERIAL BID LIST 2025-2026

S	167	COUPLING; FERNCO	10" CLAY X 10" CI/PVC	1004-88		EA	2		$69.90
S	168	COUPLING; FERNCO	10" CONC X 10" CI/PVC	1055-1010		EA	2		$31.54
S	169	COUPLING; FERNCO	12" CI/PVC X 12" CI/PVC	1056-1212		EA	2		$35.92
S	170	COUPLING; FERNCO	12" CLAY X 12" CI/PVC	1002-1212		EA	2		$35.92
S	171	COUPLING;FERNCO	12" CONC X 12" PVC	1006-1212		EA	2		$35.92
S	172	COUPLING;FERNCO	15" CLAY X 15" PVC	1002-1515		EA	2		$56.48

LEGAL NOTICE

INVITATION TO SUBMIT QUOTATIONS

The Town of Smyrna will accept quotations on the annual Gas, Water and Sewer materials for the Utilities Department. Bidders shall submit sealed quotations in the format specified in the Invitation to Submit Quotations no later than **2:00 p.m. May 19, 2026** at which time the bids will be publicly opened and read aloud. No bid may be withdrawn after the scheduled closing time for a period of 90 days. Bidding documents may be obtained at Smyrna Town Hall during regular business hours or www.townofsmyrna.org. Quotations should be mailed or hand delivered to:

Purchasing Department
Smyrna Town Hall
Sealed Bid on Annual Gas, Water & Sewer Materials
May 19 @ 2:00 p.m.
315 South Lowry Street
Smyrna, TN 37167

The Town of Smyrna will not discriminate in the purchase of all goods and services on the basis of race, color, religion, sex, national origin, age, disability or any other lawfully protected classification.

Verbal quotations, faxed quotations or quotations received after the closing date will not be accepted. The Town of Smyrna reserves the right to reject any and all bids, to waive technicalities or informalities and to accept any bid deemed to be in the best interest of the Town.

BY: Sierra Lowry
Finance Director

TO BE RUN: May 5, 2026

ED YOUNG SALES CO., INC.
COMPANY NAME

TABLE OF CONTENTS

		PAGE
SECTION I -	GENERAL INFORMATION	3
SECTION II -	SPECIFICATIONS AND PRICE QUOTATION	5
	INSURANCE REQUIREMENTS	6
	AGREEMENT	10
SECTION III –	SPECIFICATION COMPLIANCE	16
	ATTACHMENT A	17

SPREADSHEETS & DRAWINGS

EYSCO

May 15, 2026

Rex S. Gaither
Town of Smyrna
315 South Lowry Street
Smyrna, TN 37167

RE: SEALED BID ON ANNUAL GAS, WATER & SEWER MATERIALS

Gentlemen:

Please see the attached completed pricing for subject bid request. Our proposal includes the following:

- Completed Gas Meter Bid List 2026-2027
- Signed (but not dated) agreement
- Completed Section III-Proposal Exceptions
- Commercial and Technical Clarifications

We appreciate your consideration and welcome the opportunity to supply your requirements should we be the successful bidder.

Thank you,

Jaye Soss
Vice President

Cc: Mike Chitwood

GAS METER BID LIST 2025-2026

GAS	ITEM #	DESCRIPTION	SIZE	APPROVED PART #	ALTERNATE PART #	UNIT	EST QTY FY 26/27	BIDDER	UNIT PRICE	ESTIMATED DELIVERY TIME
		PREFABRICATED GAS ROTARY METER SETS								
G	7	METER SET; 3.5M ROTARY METER SET - WITHOUT METER/EVC	3.5M/3M	SEE DRAWING	N/A	EA	6		NO BID	
G	8	METER SET; 5.5M ROTARY METER SET - WITHOUT METER/EVC	5.5M/5M	SEEDRAWING	N/A	EA	2		NO BID	
G	9	METER SET; 9 M ROTARY METER SET - WITHOUT METER/EVC	9M/7M	SEE DRAWING	N/A	EA	2		NO BID	
G	10	METER SET; 14 M ROTARY METER SET - WITHOUT METER/EVC	14M/11-16M	SEE DRAWING	N/A	EA	3		NO BID	

GAS	ITEM #	DESCRIPTION	SIZE	APPROVED PART #	ALTERNATE PART #	UNIT	EST QTY FY 26/27	BIDDER	UNIT PRICE	ESTIMATED DELIVERY TIME
		DIAPHRAM GAS METERS								
G	15	METERS, AC 250 TC; ELSTER/AMERICAN - 5# CASE, 4 DIGIT ODM. INDEX; 20LT	AC 250	AC 250 TC 6" C-C	SENSUS R-275 TC 6" C-C	EA	250	EYSCO	$173.95	8-10 WEEKS
G	16	METERS, AL 425 TC; ELSTER/AMERICAN - 10# CASE, 4 DIGIT ODM.INDEX; 30LT	AL 425	AL 425 TC 8.25" C-C	SENSUS R-415 TC 8.25" C-C	EA	150	EYSCO	$514.79	8-10 WEEKS
G	17	METERS, AC 630 TC; ELSTER/AMERICAN - 25# CASE, 4 DIGIT ODM. INDEX; 45 LT	AC 630	AC 630 TC 8.25" C-C	SENSUS SONIX 600 TC 6" C-C	EA	12	EYSCO	$1,150.30	8-10 WEEKS
G	18	METERS, AL 800 TC; ELSTER/AMERICAN - 20# CASE, 5 DIGIT ODM. INDEX; 45 LT	AL 800	AL 800 TC 11" C-C	SENSUS SONIX 880 TC 6" C-C	EA	4	EYSCO	$1,917.39	8-10 WEEKS
G	19	METERS, AL 1000 TC; ELSTER AMERICAN - 25# CASE, 5 DIGIT ODM. INDEX; 45 LT	AL 1000	AL 1000 TC 11" C-C	N/A	EA	2	EYSCO	$2,117.70	8-10 WEEKS

GAS	ITEM #	DESCRIPTION	SIZE	APPROVED PART #	ALTERNATE PART #	UNIT	EST QTY FY 26/27	BIDDER	UNIT PRICE	ESTIMATED DELIVERY TIME
		ROTARY GAS METERS								
G	23	3.5M RABO/ROOTS ROTARY METER,W/TCI INDEX, 5 DIGIT, CCF,THERMO-WELL W/GASKET AND BOLT INTSALL KIT,GASKET STRAINER,FULL FACE,RUBBER W/SS 40 MESH	3.5M/3M	G65/TCIRAB-BD-B1A-FAFA-GA-AA0CACACA-0000-00	B3:3M175 ROOTS	EA	6	EYSCO	$3,640.50	3-4 WEEKS
G	24	5.5M RABO/ROOTS ROTARY METER,W/TCI INDEX,5 DIGIT CCF ,THERMO-WELLW/GASKET AND BOLT INSTALL KIT,GASKET STRAINER,FULL FACE,RUBBER W/SS 40 MESH	5.5M/5M	G100/TCIRAB-BD-B1A-FAFA-GA-AA0CACACA-0000-00	B3:5M175 ROOTS	EA	2	EYSCO	$4,366.14	3-4 WEEKS
G	25	9 M RABO/ROOTS ROTARY METER, W/TCI INDEX ,5 DIGIT CCF,THERMO-WELL W/GASKET AND BOLT INSTALL KIT,GASKET STRAINER,FULL FACE,RUBBER W/SS 40 MESH	9M/7M	G160/TCIRAB-BD-B1A-FAFA-GA-AA0CACACA-0000-00	B3:7M175 ROOTS	EA	2	EYSCO	$5,087.57	3-4 WEEKS
G	26	14 M RABO/ROOTS ROTARY METER,W/TCI INDEX,5 DIGIT CCF ,THERMO-WELL W/ GASKET AND BOLT INSTALL KIT,GASKET STRAINER,FULL FACE,RUBBER W/SS 40 MESH	14M/11M	G250/TCIRAB-BD-B1A-FAFA-GA-AA0CACACA-0000-00	B3:11M175 ROOTS	EA	1	EYSCO	$5,831.57	3-4 WEEKS
G	26A	16M RABO/ROOTS ROTARY METER,W/TCI INDEX, 5 DIGIT, CCF,THERMO-WELL W/GASKET AND BOLT INTSALL KIT,GASKET STRAINER,FULL FACE,RUBBER W/SS 40 MESH	16M		B3:16M175 ROOTS	EA	2			
		* ALL ROTARY METERS SHALL COME WITH AMR MOUNTING BRACKET		22-1929						

GAS METER BID LIST 2025-2026

GAS	ITEM #	DESCRIPTION	SIZE	APPROVED PART #	ALTERNATE PART #	UNIT	EST QTY FY 26/27	BIDDER	UNIT PRICE	ESTIMATED DELIVERY TIME
		TURBINE GAS METERS								
G	27	METER, SENSUS T-18	4"	T-18		EA	1		NO BID	
G	28	METER, SENSUS AAT -18	4"	AAT-18		EA	1		NO BID	
G	29	METER, SENSUS AAT - 27	6"	AAT-27		EA	1		NO BID	
G	30	METER, SENSUS AAT - 57	6"	ATT-57		EA	1		NO BID	
G	31	METER;SENSUS AAT-60	8"	ATT-60		EA	1		NO BID	

GAS	ITEM #	DESCRIPTION	SIZE	APPROVED PART #	ALTERNATE PART #	UNIT	EST QTY FY 26/27	BIDDER	UNIT PRICE	ESTIMATED DELIVERY TIME
		ELECTRONIC CORRECTORS								
G	37	HONEYWELL EC-350 CORRECTOR W/10' DRIVE, 0-60PSI PRESSURE & TEMP		EC350-C0B-00200000-A-B15110-A1-MW,N3-200	EAGLE MPII MVC,INDEX.0-102PSI-TEMP#MVC-0047M1	EA	3	EYSCO	$3,062.59	12-14 WEEKS ARO
G	38	HONEYWELL EC-350 CORRECTOR W/100' DRIVE, 0-300PSI PRESSURE & TEMP		EC350-E0B-00200000-A-B15110-A1-MW,N3-200	EAGLE MPII MVC,INDEX.0-290PSI-TEMP#MVC-0048M1	EA	1	EYSCO	$3,062.59	12-140WEEKS ARO
G	39	HONEYWELL TC-INDEX, FOR AMCO C-BODY ROTARY METERS		TCIAMC-BD-B1A-FAFA-BA-AA0AEBA0A-0000-00		EA	1	EYSCO	$1,167.84	8-10 WEEKS ARO
G	40	HONEYWELL TC-INDEX, FOR ROOTS B3 & ROMET 3000 ROTARY METERS		TCIDB3-BD-B2A-FAFA-BA-AA0AEBA0A-0000-00		EA	1	EYSCO	$1,186.91	8-10 WEEKS ARO
G	41	HONEYWELL TC-INDEX, FOR ROOTS B5 & ROMET 5000 ROTARY METERS		TCIRMT-BD-B2A-FAFA-BA-AAOAEBA0A-0000-00		EA	1	EYSCO	$1,186.91	8-10 WEEKS ARO
G	42	HONEYWELL TC-INDEX, FOR RABO ROTARY METERS		TCIRAB-BD-B1A-FAFA-GA-AA0CACACA-0000-00		EA	1	EYSCO	$1,167.84	8-10 WEEKS ARO
G	43	HONEYWELL TURBO CORRECTOR		TCSCMB-AAAA-AKAB0-OOAOO-A6AAB7-AAAABO-AFAGA-BACOE-OOO-000-OOOOO-C2		EA	1	EYSCO	$7,047.17	12-14 WEEKS ARO

GAS	ITEM #	DESCRIPTION	SIZE	APPROVED PART #	ALTERNATE PART #	UNIT	EST QTY FY 26/27	BIDDER	UNIT PRICE	ESTIMATED DELIVERY TIME
		METER BARS								
G	44	1" METER BARS 20LT AC-250 METERS	1" 20 LT	SEE DRAWING	N/A	EA	250	EYSCO	$155.49	14-16 WEEKS ARO
G	45	1.25 " METER BARS 30LT AL-425 METERS	1.25" 30LT	SEE DRAWING	N/A	EA	150	EYSCO	$156.28	14-16 WEEKS ARO
G	50	METER BAR - METER BYPASS FOR AL-800 OR AL-1000 - 45 LT	45LT	SEE DRAWING	N/A	EA	4	EYSCO	$854.24	14-16 WEEKS ARO
G	51	METER BAR - METER BYPASS FOR AC-630 - 45 LT	45LT	SEE DRAWING	N/A	EA	2	EYSCO	$591.25	14-16 WEEKS ARO
G	52	METER BAR - METER BYPASS FOR AL-425 - 30 LT	30LT	SEE DRAWING	N/A	EA	2	EYSCO	$554.25	14-16 WEEKS ARO

GAS	ITEM #	DESCRIPTION	SIZE	APPROVED PART #	ALTERNATE PART #	UNIT	EST QTY FY 26/27	BIDDER	UNIT PRICE	ESTIMATED DELIVERY TIME
		METER MANIFOLDS								14-16 WEEKS ARO
G	54	METER BAR - TWO METER MANIFOLD;		SEE DRAWING	N/A	EA	1	EYSCO	$313.46	14-16 WEEKS ARO
G	55	METER BAR - THREE METER MANIFOLD;		SEE DRAWING	N/A	EA	1	EYSCO	$360.50	14-16 WEEKS ARO
G	56	METER BAR - FOUR METER MANIFOLD;		SEE DRAWING	N/A	EA	1	EYSCO	$399.79	14-16 WEEKS ARO
G	57	METER BAR - FIVE METER MANIFOLD;		SEE DRAWING	N/A	EA	1	EYSCO	$439.18	14-16 WEEKS ARO
G	58	METER BAR - SIX METER MANIFOLD;		SEE DRAWING	N/A	EA	1	EYSCO	$461.50	14-16 WEEKS ARO

GAS	ITEM #	DESCRIPTION	SIZE	APPROVED PART #	ALTERNATE PART #	UNIT	EST QTY FY 26/27	BIDDER	UNIT PRICE	ESTIMATED DELIVERY TIME
		RESIDENTIAL REGULATORS								
G	63	REGULATOR; SENSUS/AMERCIAN	3/4" X 1"	1813C	143-80-2	EA	200	EYSCO	$46.52	18-20 WEEKS ARO
G	64	REGULATOR; SENSUS/AMERICAN	1" x 1"	1813C	143-80-2	EA	50	EYSCO	$46.52	18-20 WEEKS ARO

GAS METER BID LIST 2025-2026

GAS	ITEM #	DESCRIPTION	SIZE	APPROVED PART #	ALTERNATE PART #	UNIT	EST QTY FY 26/27	BIDDER	UNIT PRICE	ESTIMATED DELIVERY TIME
		COMMERCIAL REGULATORS								
G	68	REGULATOR; FISHER	2"	299H		EA	5		NO BID	
G	69	REGULATOR; FISHER	2"	CS 400		EA	4		NO BID	
G	71	REGULATOR;FISHER HIGH CAP RELEIF 2.5"VENT	2"	CS820-IQ		EA	4		NO BID	

GAS	ITEM #	DESCRIPTION	SIZE	APPROVED PART #	ALTERNATE PART #	UNIT	EST QTY FY 26/27	BIDDER	UNIT PRICE	ESTIMATED DELIVERY TIME
		FARM TAP REGULATORS/RELIEFS								
G	75	REGULATOR, FARM TAP; FISHER/BELGAS	3/4"	627R-101	R62706020002010	EA	1		NO BID	
G	76	REGULATOR; RELIEF; FISHER/BELGAS	1"	289H-49	P28908050000000	EA	1		NO BID	

GAS	ITEM #	DESCRIPTION	SIZE	APPROVED PART #	ALTERNATE PART #	UNIT	EST QTY FY 26/27	BIDDER	UNIT PRICE	ESTIMATED DELIVERY TIME
		ITRON MODULES								
G	81	ITRON MODULE FOR TOP MOUNT METERS		ERG-5006-007/008		EA	20		NO BID	
G	82	ITRON MODULE FOR AC 250-630 ,AL 425		ERG-5006-001		EA	250		NO BID	
G	83	ITRON MODULE SENSUS 275		ERG-5006-002		EA	250		NO BID	
G	84	ITRON MODULE SENSUS 415		ERG-5006-004		EA	150		NO BID	
G	85	ITRON MODULE FOR REMOTE MOUNT METERS W/ TCI		ERG-5006-502/503/505		EA	20		NO BID	



AGREEMENT

This Agreement is made and entered into as of this _____ day of _____, 20____, by and between _____, a _____ _____ (the "Bidder") and the Town of Smyrna, Tennessee, a Tennessee municipal corporation (the "Town") for the purpose of _____.

WHEREAS, the Bidder has submitted a quotation for the provision of certain products and/or services to the Town, all in accordance with the terms of the Invitation to Submit Quotations attached hereto and incorporated herein by reference as if set forth at length verbatim as Exhibit A (the "ISQ"), and which Proposal from the Bidder is attached hereto and incorporated herein by reference as if set forth at length verbatim as Exhibit B (the "Quotation"); the ISQ and the Quotation, together with any and all ancillary documents thereto, shall be collectively referred to herein as the "Bid Documents"; and

WHEREAS, the Town now desires to accept the Bidder's quotation, in accordance with the terms set forth in such Bid Documents.

NOW, THEREFORE, in consideration of the mutual covenants contained herein, and for other good and valuable consideration, the receipt and sufficiency of which is hereby acknowledged, the undersigned do hereby agree as follows:

1. Acceptance of Bid Documents. The terms of the Bid Documents, as incorporated herein by reference, are hereby accepted by the parties hereto. The Bidder hereby agrees to provide the goods and/or services contemplated by such Bid Documents in accordance with the terms set forth therein. The Town hereby accepts the Bidder's quotation to provide the goods and/or services contemplated by such Bid Documents in accordance with the terms set forth therein.

2. Entire Agreement. This Agreement, including the exhibits and any other documents referred to herein or therein, which form a part hereof, contains the entire understanding of the parties with respect to its subject matter. There are no restrictions, agreements, promises, warranties, covenants or undertakings other than those expressly set forth herein or therein. This Agreement supersedes all prior written or oral agreements and understandings between the parties with respect to its subject matter and may not be altered, modified or amended, in whole or in part, except by the express written authorization and consent of the parties hereto.

3. Severability. This agreement constitutes the product of negotiations of the parties hereto and any enforcement of hereof will be interpreted in a neutral manner and not more strongly against any party based upon the source of the draftsmanship of this Agreement. If any provision of this Agreement shall be held invalid or unenforceable by a court of competent jurisdiction, the remaining provisions hereof shall continue to be fully effective.

4. Limitation of Liability. The Town of Smyrna shall not be liable for any loss, claim, expense or damage caused by, contributed to or arising out of the acts or omission of Bidder or third parties, whether negligent or otherwise.

5. Warranties. The Bidder warrants to the Town that all materials and equipment furnished under this Contract will be new unless otherwise specified, and that all work will be of good quality, free from faults and defects, suitable for the purpose for which the materials and equipment are furnished, and in conformance with the Agreement. If it does not perform as warranted, Bidder shall use all commercially reasonable efforts to correct the product(s) so that it operates in all material respects in conformity with the written representations of Bidder. If Bidder cannot correct the product(s) within a reasonable period of time, Bidder shall refund the purchase price of the product(s). All work not conforming to these requirements, including substitutions not properly approved and authorized, may be considered defective.

6. Software Deadline, Testing and Acceptance: If applicable to the Agreement, software provided by Bidder shall be installed for the purposes of testing, as stated herein below, no later than one hundred twenty (120) days from the effective date of this Agreement unless the parties, in writing, set a different specific date. In Addition, software provided by Bidder to The Town is subject to inspection and testing to verify that the software conforms to its written specifications and to ensure it meets The Town's needs. The Town shall have seven (7) business days after the software is installed to perform testing of the software using The Town's data. The Town shall provide Bidder with written notice of acceptance or rejection of the software five (5) business days or less after the end of the testing period. If the Town does not provide timely written notice of acceptance or rejection to Bidder, the software shall be deemed to be accepted by The Town. If the software is rejected, The Town may, at its sole discretion, either (1) return the software and receive a refund of all fees paid with respect thereto, or (2) allow Bidder to repair or replace the software, without charge, in a timely manner. In the event The Town elects to allow the Bidder to repair or replace the software, The Town shall have an additional (7) business days in which to accept or reject the software as laid out hereinabove.

7. Use of The Town's Logo or Name: Bidder shall not use The Town's name or any logo in marketing or publicity materials or for marketing or publicity purposes without the prior written authorization from The Town. Bidder shall not issue, publish, or divulge any materials developed or used in the performance of this Agreement or make any statement to the media relating to this Agreement without the prior written consent of The Town.

8. Indemnification. The parties hereto agree that Bidder shall indemnify The Town for any and all claims of negligence, tortious conduct or otherwise unlawful acts committed by Bidder in the performance of their obligations under the terms of this agreement, including any and all attachments or exhibits thereto and Bidder agrees to pay any and all costs associated with the enforcement of the terms of this indemnity agreement by The Town, including but not limited to, court costs, civil judgments, assessments or any other reasonable fees associated therewith. This clause shall survive the expiration or termination of this Agreement and shall remain in full force and effect until the expiration of any applicable statute of limitation. In addition, Article II, Section 29 of the Tennessee Constitution prohibits municipalities from lending their credit to private of public entities and, therefore, prohibits an agreement by The Town to indemnify a third party or agree to a limitation of liability provision.

9. Non-Appropriation: Bidder acknowledges that The Town is a governmental entity, and the validity of this Agreement is based upon the availability of public funding under its authority. In the event The Town fails to appropriate funds or make monies available for any fiscal year covered by the term of this Agreement for services to be provided, this Agreement shall be terminated on the last day of the fiscal year for which funds were appropriated or monies made available for such purposes without liability to The Town, and such termination shall not be a breach of the Agreement, and any unused payment made to Bidder shall be returned to The Town.

10. Tax Exemption: As a tax-exempt entity, The Town shall not be responsible for sales or use taxes incurred for products or services. The Town shall supply Bidder with its Sales and Use Tax Exemption Certificate upon Bidder's request. Bidder shall bear the burden of providing its suppliers with a copy of The Town's tax exemption certificate and Bidder shall assume all liability for such taxes, if any, that should be incurred.

11. Attorney Fees. The parties hereto agree that The Town shall be in no event liable for any attorney's fees which Bidder may incur due to breach of this Agreement by either party; and further, The Town shall not acquiesce to any term in any document that indicates or infers The Town may or shall be responsible for the Attorney's fees of another party or the Bidder's attorney fees.

12. Boycott of Israel. The Bidder certifies that it is not currently engaged in, and covenants that it will not, for the duration of the Contract, engage in a Boycott of Israel, as that term is defined in Tenn. Code Ann. § 12-4-119.

13. Failure to perform. The parties agree, in the event Bidder fails to perform any obligation, other than with regards to the date of delivery, set out in this Agreement, the Town shall be reimbursed by Bidder for any and all expenses associated with having to obtain a new provider to finish out the contracted term, including, but in no way limited to, any charges/fees, which are above and beyond the amount the Town would have paid to Bidder to complete the same task; provided, however, that if the failure, by its nature, is one that can be cured, the Bidder shall have fifteen (15) business days after receipt of written notice from the Town to cure said failure to perform. The parties hereby agree, unless a specific date of delivery is provided in this Agreement or other bid documents, all deliveries shall be made to the Town no later than ninety (90) days from the date of order. The parties further agree that if Bidder, in good faith, is not able to meet this ninety (90) day deadline of delivery due to forces beyond his, her or its control, that were unforeseeable at the time of signing this contract, then this entire Agreement shall be voidable at the sole discretion of the Town. Should the Town elect to void this Agreement due to Bidder's good faith inability, due to forces beyond his, her or its control, and which were unforeseeable at the time of signing this Agreement to meet the delivery deadline, then neither party shall be deemed to have breached this Agreement, and Bidder shall return all monies, within seven (7) business days, paid by the Town for the products/items that could not be delivered in the allotted time.

14. Unilateral Modification of Agreement Not Permitted: Bidder may make unilateral changes to its Privacy Policy, provided any such changes are subject to the provisions of this Agreement but shall not materially alter the use of the service or reduce the level of protection provided to the Town at the time of the execution of this Agreement. Except as provided in the preceding sentence, notwithstanding anything in this Agreement to the contrary, any change to this Agreement made by Bidder that is not in writing and that is not properly executed by the signatures of authorized representatives of the parties hereto, including attestation by The Town's Clerk and approved as to form by the Town Attorney are subject to the terms and conditions of this Agreement.

15. Changes to Terms: Except as provided in Paragraph No. 13 above pertaining to Bidder's Privacy Policy, Bidder shall provide The Town written notice, sent in care of Town Attorney's Office, Smyrna, Tennessee, 315 South Lowry Street, Tennessee 37167, of any proposed change to this Agreement at least ninety (90) days prior to being effective to The Town. The Town shall have thirty (30) days after receiving the written notice to terminate this Agreement, and such cancellation shall not be a breach of this Agreement. Bidder will refund to The Town any payment made by The Town to Bidder equal to the difference between the number of months the payment was intended for and the number of months remaining on this Agreement that the fee was intended to cover.

16. Price Assurance: Unless specifically stated in this Agreement or other bid documents, the bid price shall be valid for the full term of this Agreement. If the Bidder, specifically states that he, she or it cannot honor the bid price for the full term of this Agreement; then this Agreement is voidable at the sole discretion of the Town, if at any time during the full term of this Agreement, Bidder requests to raise the bid

price. If the Town elects to void this Agreement, at its sole discretion, it shall not be deemed to be a breach of the contract by either party.

17. Confidentiality. The Town, as a Tennessee Municipal Corporation is subject to the Tennessee Open Records Act, set out in T.C.A. §10-7-503 et seq; therefore, this Agreement and all documents or materials, in any format, including, but not limited to paper, electronic or virtual, that are public records pursuant to law, are not confidential and are subject to disclosure. The Town will respond to all proper Open Records Requests in the time allowed by law, without any requirement to disclose such request to Bidder or provide Bidder with notice or the time to obtain a protective order. The Town does not have the burden of establishing that information is not confidential information or that its release is authorized to release the records. This section 16 serves to meet such burden and authorization of disclosure.

18. Mediation. The Town may, at its option, require the attempted resolution of any dispute arising under this Agreement by mediation prior to the filing of any lawsuit or other claim. Should any dispute arise, Bidder shall provide the Town notice of any intent to file suit by certified mail. The Town shall notify the Bidder of its intent to exercise its right to mediation within thirty (30) days of receiving such notice. If the Town does not exercise its right to mediation, Bidder may file suit. Any mediator selected under this clause shall be agreed upon by the parties and the costs of such mediation shall be divided and paid equally between the parties.

19. No Presumption Against Drafter: The parties are both business entities having substantial experience with the subject matter of this Agreement, and each has fully participated in the negotiation and drafting of this Agreement. Accordingly, this Agreement shall be construed without regard to the rule that ambiguities in a document are to be construed against the draftsman. No inferences shall be drawn from the fact that the final, duly executed Agreement differs in any respect from any previous draft hereof.

20. Governing Law. This Agreement shall be deemed to have been executed and delivered within the State of Tennessee, and the rights and obligations of the parties shall be construed and enforced in accordance with, and governed by, the laws of the State of Tennessee. The parties agree that all obligations of the parties are performable in Smyrna, Tennessee.

21. Choice of Forum and Venue. The parties' choice of forum and venue shall be exclusively in the courts of Rutherford County, Tennessee or the United States District Court, for the Middle District of Tennessee. The parties hereby waive their right to a jury trial. Any provision of the Agreement held to violate a law or regulation shall be deemed void, and all remaining provisions shall continue in force.

IN WITNESS WHEREOF, the undersigned have executed this Agreement as of the date set forth above.

TOWN OF SMYRNA, TENNESSEE

By: _____
Name: Mary Esther Reed
Title: Mayor

ATTEST:

_____
Amber Hobbs, Town Clerk

BIDDER:

By: _____
Title: VICE PRESIDENT

ATTEST:

_____

SECTION III - SPECIFICATIONS COMPLIANCE

Unless otherwise noted, all quotations for the annual gas, water and sewer materials shall be in complete accordance with the specifications detailed herein.

Bidders shall note in the space provided below any exceptions or deviations in any way from the specifications of any section of this ISQ. Bidders should provide complete detail of exceptions or deviations.

Proposal Exceptions

Section	Brief Description
Section 1	Quoted Price does not include freight. Freight will be prepaid and invoiced at time of Shipment
Bid List Section: Rotary Gas Meters G23 - G26A	METERS WILL BE SUPPLIED WITH GARLOCK STRAINERS IN LIEU OF RUBBER

By signature below, vendor acknowledges any quotation to be in full compliance with all aspects of each section of the ISQ not noted above. The undersigned hereby declares that no person or party other than the undersigned has any interest whatever in this proposal, that it is without any connection or collusion with any person or persons making or having made any proposal for the same work and without any previous understanding with such person or persons as to relative prices, obviating competition, and that it is made in good faith.

Ed Young Sales Company
COMPANY

704-393-1474
TELEPHONE NUMBER

JAYE L SOSS
REPRESENTATIVE NAME

VICE PRESIDENT
REPRESENTATIVE TITLE

Jaye Soss
SIGNATURE

JAYE.SOSS@EYSCO.COM
E-MAIL ADDRESS

Technical and Commercial Clarifications to Bid Documents:

NOTES:

1. Listed prices do not include freight charges, freight will be prepaid and invoiced at time of shipment.

2. Quoted unit pricing for certain items includes a tariff surcharge. The tariff surcharge is listed below for each item and EYSCO in full transparency will be passing through the exact dollar amount of the tariff that we are charged. **The below charges are included in the unit prices listed for each affected product**. Of course, should there be a change in the current tariff policy only the tariff charged at time of shipment would be invoiced.

Meter	Tariff per meter
AC250TC	$3.93
AL425TC	$11.62
AC630TC	$25.97
AC800TC	$41.09
AL1000TC	$47.81
EC350 (60)	$268.26
EC350 (300)	$268.26
TCI (AMCO)	$102.29
TCI (ROOTS B3	$103.96
TCI (ROOTS B5)	$103.96
TCI (RABO)	$102.29
TURBO CORRECTOR	$617.27

3. RABO meter items quoted will be supplied with Garlock strainer in lieu of the rubber strainer specified.

LEGAL NOTICE

INVITATION TO SUBMIT QUOTATIONS

The Town of Smyrna will accept quotations on the annual Gas, Water and Sewer materials for the Utilities Department. Bidders shall submit sealed quotations in the format specified in the Invitation to Submit Quotations no later than **2:00 p.m. May 19, 2026** at which time the bids will be publicly opened and read aloud. No bid may be withdrawn after the scheduled closing time for a period of 90 days. Bidding documents may be obtained at Smyrna Town Hall during regular business hours or www.townofsmyrna.org. Quotations should be mailed or hand delivered to:

Purchasing Department
Smyrna Town Hall
Sealed Bid on Annual Gas, Water & Sewer Materials
May 19 @ 2:00 p.m.
315 South Lowry Street
Smyrna, TN 37167

The Town of Smyrna will not discriminate in the purchase of all goods and services on the basis of race, color, religion, sex, national origin, age, disability or any other lawfully protected classification.

Verbal quotations, faxed quotations or quotations received after the closing date will not be accepted. The Town of Smyrna reserves the right to reject any and all bids, to waive technicalities or informalities and to accept any bid deemed to be in the best interest of the Town.

BY: Sierra Lowry
Finance Director

TO BE RUN: May 5, 2026

Equipment Controls Company

COMPANY NAME

SECTION III - SPECIFICATIONS COMPLIANCE

Unless otherwise noted, all quotations for the annual gas, water and sewer materials shall be in complete accordance with the specifications detailed herein.

Bidders shall note in the space provided below any exceptions or deviations in any way from the specifications of any section of this ISQ. Bidders should provide complete detail of exceptions or deviations.

Proposal Exceptions

Section	Brief Description
N/A	N/A

By signature below, vendor acknowledges any quotation to be in full compliance with all aspects of each section of the ISQ not noted above. The undersigned hereby declares that no person or party other than the undersigned has any interest whatever in this proposal, that it is without any connection or collusion with any person or persons making or having made any proposal for the same work and without any previous understanding with such person or persons as to relative prices, obviating competition, and that it is made in good faith.

Equipment Controls Company	(800) 554-1036
COMPANY	TELEPHONE NUMBER
Tiffany Lonsberry	Senior Manager, Inside Sales
REPRESENTATIVE NAME	REPRESENTATIVE TITLE
Tiffany Lonsberry	tlonsberry@equipmentcontrols.com
SIGNATURE	E-MAIL ADDRESS

Client#: 1156666 79EQUIPCON

ACORD™ CERTIFICATE OF LIABILITY INSURANCE

DATE (MM/DD/YYYY) 5/12/2026

THIS CERTIFICATE IS ISSUED AS A MATTER OF INFORMATION ONLY AND CONFERS NO RIGHTS UPON THE CERTIFICATE HOLDER. THIS CERTIFICATE DOES NOT AFFIRMATIVELY OR NEGATIVELY AMEND, EXTEND OR ALTER THE COVERAGE AFFORDED BY THE POLICIES BELOW. THIS CERTIFICATE OF INSURANCE DOES NOT CONSTITUTE A CONTRACT BETWEEN THE ISSUING INSURER(S), AUTHORIZED REPRESENTATIVE OR PRODUCER, AND THE CERTIFICATE HOLDER.

IMPORTANT: If the certificate holder is an ADDITIONAL INSURED, the policy(ies) must have ADDITIONAL INSURED provisions or be endorsed. If SUBROGATION IS WAIVED, subject to the terms and conditions of the policy, certain policies may require an endorsement. A statement on this certificate does not confer any rights to the certificate holder in lieu of such endorsement(s).

PRODUCER	CONTACT NAME: Certificate Team	
McGriff, a MMA LLC Company 741 W. Lanier Ave., Suite 100 Fayetteville, GA 30214-GA 770 471-7100	PHONE (A/C, No, Ext): 770 471-7100	FAX (A/C, No):
	E-MAIL ADDRESS: certificate@mcgriff.com	

INSURER(S) AFFORDING COVERAGE	NAIC #
INSURER A : Phoenix Insurance Company	25623
INSURER B : Travelers Property Casualty Co of Amer	25674
INSURER C : Travelers Indemnity Co of CT	25682
INSURER D :	
INSURER E :	
INSURER F :	

INSURED
Equipment-Control Company
PO Box 728
Norcross, GA 30091

COVERAGES **CERTIFICATE NUMBER:** **REVISION NUMBER:**

THIS IS TO CERTIFY THAT THE POLICIES OF INSURANCE LISTED BELOW HAVE BEEN ISSUED TO THE INSURED NAMED ABOVE FOR THE POLICY PERIOD INDICATED. NOTWITHSTANDING ANY REQUIREMENT, TERM OR CONDITION OF ANY CONTRACT OR OTHER DOCUMENT WITH RESPECT TO WHICH THIS CERTIFICATE MAY BE ISSUED OR MAY PERTAIN, THE INSURANCE AFFORDED BY THE POLICIES DESCRIBED HEREIN IS SUBJECT TO ALL THE TERMS, EXCLUSIONS AND CONDITIONS OF SUCH POLICIES. LIMITS SHOWN MAY HAVE BEEN REDUCED BY PAID CLAIMS.

INSR LTR	TYPE OF INSURANCE	ADDL INSR	SUBR WVD	POLICY NUMBER	POLICY EFF (MM/DD/YYYY)	POLICY EXP (MM/DD/YYYY)	LIMITS	
A	X COMMERCIAL GENERAL LIABILITY			Y6301R474048PHX25	07/30/2025	07/30/2026	EACH OCCURRENCE	$1,000,000
	CLAIMS-MADE X OCCUR						DAMAGE TO RENTED PREMISES (Ea occurrence)	$1,000,000
							MED EXP (Any one person)	$10,000
							PERSONAL & ADV INJURY	$1,000,000
	GEN'L AGGREGATE LIMIT APPLIES PER:						GENERAL AGGREGATE	$3,000,000
	POLICY PRO-JECT LOC						PRODUCTS - COMP/OP AGG	$3,000,000
	OTHER:							$
C	AUTOMOBILE LIABILITY			8101R4742452514G	07/30/2025	07/30/2026	COMBINED SINGLE LIMIT (Ea accident)	$1,000,000
	X ANY AUTO						BODILY INJURY (Per person)	$
	OWNED AUTOS ONLY / SCHEDULED AUTOS						BODILY INJURY (Per accident)	$
	X HIRED AUTOS ONLY / X NON-OWNED AUTOS ONLY						PROPERTY DAMAGE (Per accident)	$
								$
B	X UMBRELLA LIAB X OCCUR			CUP1R4746752514	07/30/2025	07/30/2026	EACH OCCURRENCE	$10,000,000
	EXCESS LIAB CLAIMS-MADE						AGGREGATE	$10,000,000
	DED X RETENTION $10,000							$
B	WORKERS COMPENSATION AND EMPLOYERS' LIABILITY Y/N			UB1R4747672514G	07/30/2025	07/30/2026	X PER STATUTE OTH-ER	
	ANY PROPRIETOR/PARTNER/EXECUTIVE OFFICER/MEMBER EXCLUDED? Y	N/A					E.L. EACH ACCIDENT	$1,000,000
	(Mandatory in NH)						E.L. DISEASE - EA EMPLOYEE	$1,000,000
	If yes, describe under DESCRIPTION OF OPERATIONS below						E.L. DISEASE - POLICY LIMIT	$1,000,000

DESCRIPTION OF OPERATIONS / LOCATIONS / VEHICLES (ACORD 101, Additional Remarks Schedule, may be attached if more space is required)

** Workers Comp Information **
Workers Compensation Officer Excluded: James E Bell Jr.
** Umbrella Information **
Underlying Policies: General Liability, Automobile, Workers Comp
See Attached Forms
(See Attached Descriptions)

CERTIFICATE HOLDER

Town of Smyrna
Department of Safety & Risk Management
Attn: Henry Urbina
315 S Lowry St
Smyrna, TN 37167

CANCELLATION

SHOULD ANY OF THE ABOVE DESCRIBED POLICIES BE CANCELLED BEFORE THE EXPIRATION DATE THEREOF, NOTICE WILL BE DELIVERED IN ACCORDANCE WITH THE POLICY PROVISIONS.

AUTHORIZED REPRESENTATIVE
Michael Anthony Parker Jr.

© 1988-2015 ACORD CORPORATION. All rights reserved.

DESCRIPTIONS (Continued from Page 1)

CGD246 04 19 Blanket Additional Insured (Includes Products-Completed Operations If Requited By Contract)
CGD458 0219 XTEND Endorsement for Manufacturers And Wholesalers
CGT100 0219 Commercial General Liability Coverage Form
CAT353 0215 Business Auto Extension Endorsement
CAT474 0216 Blanket Additional Insured-Primary and Non-Contributory With Other Insurance
WC000313 (00) Waiver of Our Right To Recover From Others Endorsement.

RE: Project: Town of Smyrna Bid Opening.

AGREEMENT

This Agreement is made and entered into as of this ____ day of _____, 20___, by and between Equipment Controls Company, a Georgia Corporation _____ (the "Bidder") and the Town of Smyrna, Tennessee, a Tennessee municipal corporation (the "Town") for the purpose of _____.

WHEREAS, the Bidder has submitted a quotation for the provision of certain products and/or services to the Town, all in accordance with the terms of the Invitation to Submit Quotations attached hereto and incorporated herein by reference as if set forth at length verbatim as Exhibit A (the "ISQ"), and which Proposal from the Bidder is attached hereto and incorporated herein by reference as if set forth at length verbatim as Exhibit B (the "Quotation"); the ISQ and the Quotation, together with any and all ancillary documents thereto, shall be collectively referred to herein as the "Bid Documents"; and

WHEREAS, the Town now desires to accept the Bidder's quotation, in accordance with the terms set forth in such Bid Documents.

NOW, THEREFORE, in consideration of the mutual covenants contained herein, and for other good and valuable consideration, the receipt and sufficiency of which is hereby acknowledged, the undersigned do hereby agree as follows:

1. Acceptance of Bid Documents. The terms of the Bid Documents, as incorporated herein by reference, are hereby accepted by the parties hereto. The Bidder hereby agrees to provide the goods and/or services contemplated by such Bid Documents in accordance with the terms set forth therein. The Town hereby accepts the Bidder's quotation to provide the goods and/or services contemplated by such Bid Documents in accordance with the terms set forth therein.

2. Entire Agreement. This Agreement, including the exhibits and any other documents referred to herein or therein, which form a part hereof, contains the entire understanding of the parties with respect to its subject matter. There are no restrictions, agreements, promises, warranties, covenants or undertakings other than those expressly set forth herein or therein. This Agreement supersedes all prior written or oral agreements and understandings between the parties with respect to its subject matter and may not be altered, modified or amended, in whole or in part, except by the express written authorization and consent of the parties hereto.

3. Severability. This agreement constitutes the product of negotiations of the parties hereto and any enforcement of hereof will be interpreted in a neutral manner and not more strongly against any party based upon the source of the draftsmanship of this Agreement. If any provision of this Agreement shall be held invalid or unenforceable by a court of competent jurisdiction, the remaining provisions hereof shall continue to be fully effective.

4. Limitation of Liability. The Town of Smyrna shall not be liable for any loss, claim, expense or damage caused by, contributed to or arising out of the acts or omission of Bidder or third parties, whether negligent or otherwise.

5. Warranties. The Bidder warrants to the Town that all materials and equipment furnished under this Contract will be new unless otherwise specified, and that all work will be of good quality, free from faults and defects, suitable for the purpose for which the materials and equipment are furnished, and in conformance with the Agreement. If it does not perform as warranted, Bidder shall use all commercially reasonable efforts to correct the product(s) so that it operates in all material respects in conformity with the written representations of Bidder. If Bidder cannot correct the product(s) within a reasonable period of time, Bidder shall refund the purchase price of the product(s). All work not conforming to these requirements, including substitutions not properly approved and authorized, may be considered defective.

6. Software Deadline, Testing and Acceptance: If applicable to the Agreement, software provided by Bidder shall be installed for the purposes of testing, as stated herein below, no later than one hundred twenty (120) days from the effective date of this Agreement unless the parties, in writing, set a different specific date. In Addition, software provided by Bidder to The Town is subject to inspection and testing to verify that the software conforms to its written specifications and to ensure it meets The Town's needs. The Town shall have seven (7) business days after the software is installed to perform testing of the software using The Town's data. The Town shall provide Bidder with written notice of acceptance or rejection of the software five (5) business days or less after the end of the testing period. If the Town does not provide timely written notice of acceptance or rejection to Bidder, the software shall be deemed to be accepted by The Town. If the software is rejected, The Town may, at its sole discretion, either (1) return the software and receive a refund of all fees paid with respect thereto, or (2) allow Bidder to repair or replace the software, without charge, in a timely manner. In the event The Town elects to allow the Bidder to repair or replace the software, The Town shall have an additional (7) business days in which to accept or reject the software as laid out hereinabove.

7. Use of The Town's Logo or Name: Bidder shall not use The Town's name or any logo in marketing or publicity materials or for marketing or publicity purposes without the prior written authorization from The Town. Bidder shall not issue, publish, or divulge any materials developed or used in the performance of this Agreement or make any statement to the media relating to this Agreement without the prior written consent of The Town.

8. Indemnification. The parties hereto agree that Bidder shall indemnify The Town for any and all claims of negligence, tortious conduct or otherwise unlawful acts committed by Bidder in the performance of their obligations under the terms of this agreement, including any and all attachments or exhibits thereto and Bidder agrees to pay any and all costs associated with the enforcement of the terms of this indemnity agreement by The Town, including but not limited to, court costs, civil judgments, assessments or any other reasonable fees associated therewith. This clause shall survive the expiration or termination of this Agreement and shall remain in full force and effect until the expiration of any applicable statute of limitation. In addition, Article II, Section 29 of the Tennessee Constitution prohibits municipalities from lending their credit to private of public entities and, therefore, prohibits an agreement by The Town to indemnify a third party or agree to a limitation of liability provision.

9. Non-Appropriation: Bidder acknowledges that The Town is a governmental entity, and the validity of this Agreement is based upon the availability of public funding under its authority. In the event The Town fails to appropriate funds or make monies available for any fiscal year covered by the term of this Agreement for services to be provided, this Agreement shall be terminated on the last day of the fiscal year for which funds were appropriated or monies made available for such purposes without liability to The Town, and such termination shall not be a breach of the Agreement, and any unused payment made to Bidder shall be returned to The Town.

10. Tax Exemption: As a tax-exempt entity, The Town shall not be responsible for sales or use taxes incurred for products or services. The Town shall supply Bidder with its Sales and Use Tax Exemption Certificate upon Bidder's request. Bidder shall bear the burden of providing its suppliers with a copy of The Town's tax exemption certificate and Bidder shall assume all liability for such taxes, if any, that should be incurred.

11. Attorney Fees. The parties hereto agree that The Town shall be in no event liable for any attorney's fees which Bidder may incur due to breach of this Agreement by either party; and further, The Town shall not acquiesce to any term in any document that indicates or infers The Town may or shall be responsible for the Attorney's fees of another party or the Bidder's attorney fees.

12. Boycott of Israel. The Bidder certifies that it is not currently engaged in, and covenants that it will not, for the duration of the Contract, engage in a Boycott of Israel, as that term is defined in Tenn. Code Ann. § 12-4-119.

13. Failure to perform. The parties agree, in the event Bidder fails to perform any obligation, other than with regards to the date of delivery, set out in this Agreement, the Town shall be reimbursed by Bidder for any and all expenses associated with having to obtain a new provider to finish out the contracted term, including, but in no way limited to, any charges/fees, which are above and beyond the amount the Town would have paid to Bidder to complete the same task; provided, however, that if the failure, by its nature, is one that can be cured, the Bidder shall have fifteen (15) business days after receipt of written notice from the Town to cure said failure to perform. The parties hereby agree, unless a specific date of delivery is provided in this Agreement or other bid documents, all deliveries shall be made to the Town no later than ninety (90) days from the date of order. The parties further agree that if Bidder, in good faith, is not able to meet this ninety (90) day deadline of delivery due to forces beyond his, her or its control, that were unforeseeable at the time of signing this contract, then this entire Agreement shall be voidable at the sole discretion of the Town. Should the Town elect to void this Agreement due to Bidder's good faith inability, due to forces beyond his, her or its control, and which were unforeseeable at the time of signing this Agreement to meet the delivery deadline, then neither party shall be deemed to have breached this Agreement, and Bidder shall return all monies, within seven (7) business days, paid by the Town for the products/items that could not be delivered in the allotted time.

14. Unilateral Modification of Agreement Not Permitted: Bidder may make unilateral changes to its Privacy Policy, provided any such changes are subject to the provisions of this Agreement but shall not materially alter the use of the service or reduce the level of protection provided to the Town at the time of the execution of this Agreement. Except as provided in the preceding sentence, notwithstanding anything in this Agreement to the contrary, any change to this Agreement made by Bidder that is not in writing and that is not properly executed by the signatures of authorized representatives of the parties hereto, including attestation by The Town's Clerk and approved as to form by the Town Attorney are subject to the terms and conditions of this Agreement.

15. Changes to Terms: Except as provided in Paragraph No. 13 above pertaining to Bidder's Privacy Policy, Bidder shall provide The Town written notice, sent in care of Town Attorney's Office, Smyrna, Tennessee, 315 South Lowry Street, Tennessee 37167, of any proposed change to this Agreement at least ninety (90) days prior to being effective to The Town. The Town shall have thirty (30) days after receiving the written notice to terminate this Agreement, and such cancellation shall not be a breach of this Agreement. Bidder will refund to The Town any payment made by The Town to Bidder equal to the difference between the number of months the payment was intended for and the number of months remaining on this Agreement that the fee was intended to cover.

16. Price Assurance: Unless specifically stated in this Agreement or other bid documents, the bid price shall be valid for the full term of this Agreement. If the Bidder, specifically states that he, she or it cannot honor the bid price for the full term of this Agreement; then this Agreement is voidable at the sole discretion of the Town, if at any time during the full term of this Agreement, Bidder requests to raise the bid

price. If the Town elects to void this Agreement, at its sole discretion, it shall not be deemed to be a breach of the contract by either party.

17. Confidentiality. The Town, as a Tennessee Municipal Corporation is subject to the Tennessee Open Records Act, set out in T.C.A. §10-7-503 et seq; therefore, this Agreement and all documents or materials, in any format, including, but not limited to paper, electronic or virtual, that are public records pursuant to law, are not confidential and are subject to disclosure. The Town will respond to all proper Open Records Requests in the time allowed by law, without any requirement to disclose such request to Bidder or provide Bidder with notice or the time to obtain a protective order. The Town does not have the burden of establishing that information is not confidential information or that its release is authorized to release the records. This section 16 serves to meet such burden and authorization of disclosure.

18. Mediation. The Town may, at its option, require the attempted resolution of any dispute arising under this Agreement by mediation prior to the filing of any lawsuit or other claim. Should any dispute arise, Bidder shall provide the Town notice of any intent to file suit by certified mail. The Town shall notify the Bidder of its intent to exercise its right to mediation within thirty (30) days of receiving such notice. If the Town does not exercise its right to mediation, Bidder may file suit. Any mediator selected under this clause shall be agreed upon by the parties and the costs of such mediation shall be divided and paid equally between the parties.

19. No Presumption Against Drafter: The parties are both business entities having substantial experience with the subject matter of this Agreement, and each has fully participated in the negotiation and drafting of this Agreement. Accordingly, this Agreement shall be construed without regard to the rule that ambiguities in a document are to be construed against the draftsman. No inferences shall be drawn from the fact that the final, duly executed Agreement differs in any respect from any previous draft hereof.

20. Governing Law. This Agreement shall be deemed to have been executed and delivered within the State of Tennessee, and the rights and obligations of the parties shall be construed and enforced in accordance with, and governed by, the laws of the State of Tennessee. The parties agree that all obligations of the parties are performable in Smyrna, Tennessee.

21. Choice of Forum and Venue. The parties' choice of forum and venue shall be exclusively in the courts of Rutherford County, Tennessee or the United States District Court, for the Middle District of Tennessee. The parties hereby waive their right to a jury trial. Any provision of the Agreement held to violate a law or regulation shall be deemed void, and all remaining provisions shall continue in force.

IN WITNESS WHEREOF, the undersigned have executed this Agreement as of the date set forth above.

TOWN OF SMYRNA, TENNESSEE

By: _____
Name: Mary Esther Reed
Title: Mayor

ATTEST:

_____
Amber Hobbs, Town Clerk

BIDDER:

By: Tiffany Lonsberry
Title: Senior Manager, Inside Sales

ATTEST:

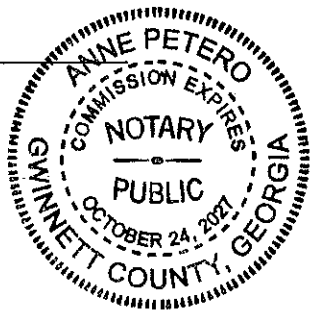

GAS MATERIALS BID LIST 2025-2026

GAS	ITEM #	DESCRIPTION	SIZE	APPROVED PART #	ALTERNATE PART #	UNIT	EST QTY FY 26/27	BIDDER	UNIT PRICE	ESTIMATED DELIVERY TIME
		METER RISERS								
G	89	RISER, ANODELESS, 36V X 24H, ELSTER PERFECTION	3/4" X 3/4"	79207		EA	300	Equipment Controls Co.	No Bid	
G	90	RISER, ANODELESS, ELSTER PERFECTION	1" X 1"	75766		EA	30	Equipment Controls Co.	No Bid	
G	92	RISER, ANODELESS, ELSTER PERFECTION,	2" X 2"	ASR2-2F-PB		EA	30	Equipment Controls Co.	No Bid	

GAS	ITEM #	DESCRIPTION	SIZE	APPROVED PART #	ALTERNATE PART #	UNIT	EST QTY FY 26/27	BIDDER	UNIT PRICE	ESTIMATED DELIVERY TIME
		CUTTOFS								
G	96	STOPCOCK; JOMAR 241-004D	3/4"	241-004D		EA	300	Equipment Controls Co.	No Bid	
G	97	STOPCOCK, HIGH PRESSURE, MUELLER	3/4"	3/4" H-11185		EA	10	Equipment Controls Co.	No Bid	
G	98	STOPCOCK;JOMAR 240-005B STRAIGHT	1"	240-005B		EA	30	Equipment Controls Co.	No Bid	
G	99	STOPCOCK; JOMAR 241-005D	1"	241-005D		EA	40	Equipment Controls Co.	No Bid	
G	100	STOPCOCK; 175 MAOP MUELLER	1 1/4"	1 1/4"H11175		EA	10	Equipment Controls Co.	No Bid	
G	101	STOPCOCK; 175 MAOP MCDONALD	1 1/2"	560 B 1 1/2"		EA	10	Equipment Controls Co.	No Bid	
G	102	STOPCOCK; 175 MAOP MUELLER	2"	2" H11175		EA	30	Equipment Controls Co.	No Bid	

GAS	ITEM #	DESCRIPTION	SIZE	APPROVED PART #	ALTERNATE PART #	UNIT	EST QTY FY 26/27	BIDDER	UNIT PRICE	ESTIMATED DELIVERY TIME
		POLYETHYLENE PIPE								
G	107	PIPE; HIGH DENSITY 8300 4710 BLK/YELLOW STRIPE-SDR-11 (500 FT ROLLS)	3/4"	1114569-83P 00.75"		FT	20000	Equipment Controls Co.	No Bid	
G	108	PIPE; HIGH DENSITY 8300 4710 BLK/YELLOW STRIPE-SDR-11(500 FT ROLLS)	1"	1114606-83P 01.00"		FT	3000	Equipment Controls Co.	No Bid	
G	109	PIPE; HIGH DENSITY 8300 4710 BLK/YELLOW STRIPE -SDR-11(500 FT ROLLS)	1 1/4"	1056882-83P 01.25"		FT	350	Equipment Controls Co.	No Bid	
G	110	PIPE; HIGH DENSITY 8300 4710 BLK/YELLOW STRIPE-SDR-11 (500 FT ROLLS)	2"	1056925-83P 0.200		FT	15000	Equipment Controls Co.	No Bid	
G	111	PIPE; HIGH DENISTY 8300 4710 BLK/YELLOW STRIPE -SDR-11(40 FT PER SECTIC	3"	1056967-83P 03.00"		FT	200	Equipment Controls Co.	No Bid	
G	112	PIPE; HIGH DENSITY 8300 4710 BLK/YELLOW STRIPE-SDR-11(40 FT PER SECTIC	4"	1061088-83P 04.00"		FT	5000	Equipment Controls Co.	No Bid	
G	113	PIPE; HIGH DENSITY 8300 4710 BLK/YELLOW STRIPE -SDR-11(40 FT PER SECTIC	6"	1057061-83P 06.00"		FT	2000	Equipment Controls Co.	No Bid	
		DURA LINE NOT ACCEPTED								

GAS	ITEM #	DESCRIPTION	SIZE	APPROVED PART #	ALTERNATE PART #	UNIT	EST QTY FY 26/27	BIDDER	UNIT PRICE	ESTIMATED DELIVERY TIME
		POLYETHYLENE FITTINGS								
G	118	CAP; BUTT FUSE HIGH DENISTY 8100 4710	3/4"	BBF40-07		EA	100	Equipment Controls Co.	No Bid	
G	119	CAP; BUTT FUSE HIGH DENSITY 8100 4710	1"	BBF40-1		EA	15	Equipment Controls Co.	No Bid	
G	121	CAP; BUTT FUSE HIGH DENSITY8100 4710	2"	BBF40-2		EA	40	Equipment Controls Co.	No Bid	
G	122	CAP; BUTT FUSE HIGH DENSITY 8100 4710	3"	BBF40-3		EA	10	Equipment Controls Co.	No Bid	
G	123	CAP; BUTT FUSE HIGH DENSITY 8100 4710	4"	BBF40-4		EA	25	Equipment Controls Co.	No Bid	
G	124	CAP; BUTT FUSE HIGH DENSITY 8100 4710	6"	BBF40-6		EA	10	Equipment Controls Co.	No Bid	
G	125	REDUCER; BUTT FUSE HIGH DENSITY 8100 4710	1" X 1/2"	1006458		EA	5	Equipment Controls Co.	No Bid	

GAS MATERIALS BID LIST 2025-2026

G	126	REDUCER; BUTT FUSE HIGH DENSITY 8100 4710	1" X 3/4"	1036888		EA	10	Equipment Controls Co.	No Bid	
G	127	REDUCER; BUTT FUSE HIGH DENSITY 8100 4710	1 1/4" X 1"	1007964		EA	10	Equipment Controls Co.	No Bid	
G	128	REDUCER; BUTT FUSE HIGH DENISTY 8100 4710	2" X 1"	1063171		EA	10	Equipment Controls Co.	No Bid	
G	129	REDUCER; BUTT FUSE HIGH DENSITY 8100 4710	2" X 1 1/4"	1007977		EA	10	Equipment Controls Co.	No Bid	
G	130	REDUCER; BUTT FUSE HIGH DENSITY 8100 4710	3" X 2"	1007985		EA	10	Equipment Controls Co.	No Bid	
G	131	REDUCER; BUTT FUSE HIGH DENSITY 8100 4710	6" X 4"	1006469		EA	10	Equipment Controls Co.	No Bid	
G	132	REDUCER; BUTT FUSE HIGH DENSITY 8100 4710	4" x 3"	1007992		EA	6	Equipment Controls Co.	No Bid	
G	133	REDUCER; BUTT FUSE HIGH DENSITY 8100 4710	4" X 2"	1006466		EA	25	Equipment Controls Co.	No Bid	
G	134	TEE; HIGH DENSITY 8100 4710	3/4"	1007902		EA	30	Equipment Controls Co.	No Bid	
G	135	TEE; HIGH DENSITY 8100 4710	1"	1007910		EA	20	Equipment Controls Co.	No Bid	
G	136	TEE; HIGH DENSITY 8100 4710	1 1/4"	1007917		EA	4	Equipment Controls Co.	No Bid	
G	137	TEE; HIGH DENSITY 8100 4710	2"	1006426		EA	20	Equipment Controls Co.	No Bid	
G	138	TEE; HIGH DENSITY 8100 4710	3"	1007933		EA	4	Equipment Controls Co.	No Bid	
G	139	TEE; HIGH DENSITY8100 4710	4"	1006434		EA	20	Equipment Controls Co.	No Bid	
G	140	TEE; HIGH DENSITY 8100 4710	6"	1006442		EA	6	Equipment Controls Co.	No Bid	
G	141	ELBOW; 90 D HIGH DENSITY 8100 4710	2"	1006422		EA	10	Equipment Controls Co.	No Bid	
G	142	ELBOW; 90 D HIGH DENSITY 8100 4710	3"	1007932		EA	10	Equipment Controls Co.	No Bid	
G	143	ELBOW; 90 D HIGH DENSITY 8100 4710	4"	1006432		EA	10	Equipment Controls Co.	No Bid	
G	144	ELBOW; 90 D HIGH DENSITY 8100 4710	6"	1006440		EA	10	Equipment Controls Co.	No Bid	
G	145	ELBOW; 45 D HIGH DENSITY 8100 4710	4"	1006430		EA	10	Equipment Controls Co.	No Bid	
GAS	**ITEM #**	**DESCRIPTION**	**SIZE**	**APPROVED PART #**	**ALTERNATE PART #**	**UNIT**	**EST QTY FY 26/27**	**BIDDER**	**UNIT PRICE**	**ESTIMATED DELIVERY TIME**
		BOLT ON STEEL TAPPING SADDLE								
G	149	TAPPING SADDLE; STEEL, CONTINENTAL	1 1/4"	1315-15-1013-00		EA	4	Equipment Controls Co.	No Bid	
G	150	TAPPING SADDLE; STEEL, CONTINENTAL	2" X 3/4"	1315-17-1013-00		EA	4	Equipment Controls Co.	No Bid	
G	151	TAPPING SADDLE; STEEL, CONTINENTAL	2" X 1"	1315-17-1014-00		EA	4	Equipment Controls Co.	No Bid	
G	152	TAPPING SADDLE; STEEL, CONTINENTAL	2 1/2" X 1"			EA	4	Equipment Controls Co.	No Bid	
G	153	TAPPING SADDLE; STEEL, CONTINENTAL	3" X 1""	1315-19-1014-00		EA	4	Equipment Controls Co.	No Bid	
G	154	TAPPING SADDLE; STEEL, CONTINENTAL	4" X 1"	1315-21-1014-00		EA	4	Equipment Controls Co.	No Bid	
G	155	TAPPING SADDLE; STEEL, CONTINENTAL	6" X 1"	1315-24-1014-00		EA	4	Equipment Controls Co.	No Bid	
GAS	**ITEM #**	**DESCRIPTION**	**SIZE**	**APPROVED PART #**	**ALTERNATE PART #**	**UNIT**	**EST QTY FY 26/27**	**BIDDER**	**UNIT PRICE**	**ESTIMATED DELIVERY TIME**
		LYCOFIT FITTINGS								
G	160	REDUCER; LYCOFIT	3/4" X 1/2"	LCY060Y010B-RR		EA	10	Equipment Controls Co.	No Bid	
G	161	TEE; LYCOFIT	3/4"	LCO60Y-3TR		EA	25	Equipment Controls Co.	No Bid	
G	162	TEE; LYCOFIT	1"	LC070Y-3TR		EA	20	Equipment Controls Co.	No Bid	
G	163	TEE; LYCOFIT	2"	LC200Y-3TR		EA	20	Equipment Controls Co.	No Bid	
G	164	LYCO CAP	3/4"	LC060Y ECR		EA	50	Equipment Controls Co.	No Bid	
G	165	LYCO CAP	1"	LC070Y-ECR		EA	20	Equipment Controls Co.	No Bid	
G	166	LYCO CAP	2"	LC200Y-ECR		EA	10	Equipment Controls Co.	No Bid	
G	167	COUPLING; LYCOFIT	3/4"	LC 060 Y-DER		EA	100	Equipment Controls Co.	No Bid	
G	168	COUPLING; LYCOFIT	1/2"	LC 010 B-DER		EA	10	Equipment Controls Co.	No Bid	
G	169	COUPLING; LYCOFIT	1"	LC 070Y-DER		EA	50	Equipment Controls Co.	No Bid	
G	170	COUPLING; LYCOFIT	1 1/4"	LCO80X-DESR		EA	10	Equipment Controls Co.	No Bid	
G	171	COUPLING; LYCOFIT	2"	LC200Y-DESR		EA	40	Equipment Controls Co.	No Bid	

GAS MATERIALS BID LIST 2025-2026

G	172	COUPLING; LYCOFIT REPAIR	2"	LC 200Y-DER		EA	15	Equipment Controls Co.	No Bid	
GAS	**ITEM #**	**DESCRIPTION**	**SIZE**	**APPROVED PART #**	**ALTERNATE PART #**	**UNIT**	**EST QTY FY 26/27**	**BIDDER**	**UNIT PRICE**	**ESTIMATED DELIVERY TIME**
		POLYVALVES								
G	177	POLYVALVE; KEROTEST FULL PORT, 4710	1"	99051111	PERFECTION 45011	EA	10	Equipment Controls Co.	No Bid	
G	178	POLYVALVE; KEROTEST FULL PORT, 4710	1 1/4"	99051211	PERFECTION 45172	EA	5	Equipment Controls Co.	No Bid	
G	179	POLYVALVE; KEROTEST FULL PORT, 4710	2"	99052011	PERFECTION 46001	EA	25	Equipment Controls Co.	No Bid	
G	180	POLYVALVE; KEROTEST FULL PORT, 4710	3'	99053011	PERFECTION 47016	EA	5	Equipment Controls Co.	No Bid	
G	181	POLYVALVE; KEROTEST FULL PORT, 4710	4"	99054011	PERFECTION 47010	EA	25	Equipment Controls Co.	No Bid	
G	182	POLYVALVE; KEROTEST FULL PORT, 4710	6"	99056011	PERFECTION 48000	EA	5	Equipment Controls Co.	No Bid	
GAS	**ITEM #**	**DESCRIPTION**	**SIZE**	**APPROVED PART #**	**ALTERNATE PART #**	**UNIT**	**EST QTY FY 26/27**	**BIDDER**	**UNIT PRICE**	**ESTIMATED DELIVERY TIME**
		TRANSITION FITTINGS								
G	187	TRANSITION FITTING; STEEL - ELSTER PERFECTION	3/4" X 1/2"	700303		EA	5	Equipment Controls Co.	No Bid	
G	188	TRANSITION FITTING; STEEL - ELSTER PERFECTION	3/4" X 3/4"	700901		EA	5	Equipment Controls Co.	No Bid	
G	189	TRANSITION FITTING; STEEL - ELSTER PERFECTION	1" X 1"	701301		EA	5	Equipment Controls Co.	No Bid	
G	190	TRANSITION FITTING; STEEL - ELSTER PERFECTION	2" X 2"	702730		EA	5	Equipment Controls Co.	No Bid	
G	191	TRANSITION FITTING; STEEL - ELSTER PERFECTION	3" X 3"	702903		EA	5	Equipment Controls Co.	No Bid	
G	192	TRANSITION FITTING; STEEL - ELSTER PERFECTION	4" X 4"	703129		EA	5	Equipment Controls Co.	No Bid	
G	193	TRANSITION FITTING; STEEL - ELSTER PERFECTION	6" X 6"	704116		EA	5	Equipment Controls Co.	No Bid	
GAS	**ITEM #**	**DESCRIPTION**	**SIZE**	**APPROVED PART #**	**ALTERNATE PART #**	**UNIT**	**EST QTY FY 26/27**	**BIDDER**	**UNIT PRICE**	**ESTIMATED DELIVERY TIME**
		DRESSER COUPLINGS								
G	207	COUPLING; ARMORED COMPRESSION, DRESSER	3/4" X 6"	0900-0001-082		EA	5	Equipment Controls Co.	No Bid	
G	208	COUPLING; ARMORED COMPRESSION, DRESSER	1" X 6"	0090-0002-082		EA	5	Equipment Controls Co.	No Bid	
G	209	COUPLING; ARMORED COMPRESSION, DRESSER	1 1/4" X 6"	0090-0003-082		EA	5	Equipment Controls Co.	No Bid	
G	210	COUPLING; ARMORED COMPRESSION, DRESSER	1 1/2" X 6"	0090-0004-082		EA	5	Equipment Controls Co.	No Bid	
G	211	COUPLING; ARMORED COMPRESSION, DRESSER	2" X 6"	0090-0005-082		EA	5	Equipment Controls Co.	No Bid	
G	212	COUPLING; ARMORED COMPRESSION, DRESSER	3/4" X 12"	0090-0090-082		EA	5	Equipment Controls Co.	No Bid	
G	213	COUPLING; ARMORED COMPRESSION, DRESSER	1" X 12"	0090-0091-082		EA	5	Equipment Controls Co.	No Bid	
G	214	COUPLING; ARMORED COMPRESSION, DRESSER	1 1/4" X 12"	0090-0092-082		EA	5	Equipment Controls Co.	No Bid	
G	215	COUPLING; ARMORED COMPRESSION, DRESSER	1 1/2" X 12"	0090-0093-082		EA	5	Equipment Controls Co.	No Bid	
G	216	COUPLING; ARMORED COMPRESSION, DRESSER	2" X 12"	0090-0094-082		EA	5	Equipment Controls Co.	No Bid	
G	217	COUPLING; ARMORED COMPRESSION TEE, DRESSER	3/4"	0090-0710-082		EA	5	Equipment Controls Co.	No Bid	
G	218	COUPLING; ARMORED COMPRESSION TEE, DRESSER	1"	0090-0711-082		EA	5	Equipment Controls Co.	No Bid	
GAS	**ITEM #**	**DESCRIPTION**	**SIZE**	**APPROVED PART #**	**ALTERNATE PART #**	**UNIT**	**EST QTY FY 26/27**	**BIDDER**	**UNIT PRICE**	**ESTIMATED DELIVERY TIME**
		WELD TAP TEES								
G	223	MUELLER WELD ON TAP	3/4"	H - 17500 3/4"		EA	5	Equipment Controls Co.	No Bid	
G	224	MUELLER WELD ON TAP	1"	H - 17500 1"		EA	5	Equipment Controls Co.	No Bid	
G	225	MUELLER WELD ON TAP	2"	H - 17500 2"		EA	5	Equipment Controls Co.	No Bid	

GAS MATERIALS BID LIST 2025-2026

GAS	ITEM #	DESCRIPTION	SIZE	APPROVED PART #	ALTERNATE PART #	UNIT	EST QTY FY 26/27	BIDDER	UNIT PRICE	ESTIMATED DELIVERY TIME
		VALVE BOXES								
G	230	TALL VALVE BOX WITH LIDS; SIGMA		562-S-G		EA	50	Equipment Controls Co.	No Bid	
G	231	SHORT VALVE BOX WITH LIDS; SIGMA		461-S-G		EA	10	Equipment Controls Co.	No Bid	
G	232	VALVE BOX EXTENSION; SIGMA	1"	VBR-1		EA	25	Equipment Controls Co.	No Bid	
G	233	VALVE BOX EXTENSION; SIGMA	1.5"	VBR 1.5		EA	25	Equipment Controls Co.	No Bid	
G	234	VALVE BOX EXTENSION; SIGMA	2"	VBR - 2		EA	30	Equipment Controls Co.	No Bid	
G	235	VALVE BOX EXTENSION; SIGMA	3"	VBR -3		EA	25	Equipment Controls Co.	No Bid	
G	236	VALVE BOX EXTENSION; SIGMA	4"	VBR - 4		EA	25	Equipment Controls Co.	No Bid	
G	237	VALVE BOX EXTENSION; SIGMA	6"	VBR - 6		EA	25	Equipment Controls Co.	No Bid	
		HIGHLIGHTED PORTION IS ALSO ON THE WATER BID (W-500-505)		***PLEASE BID ON WATER (W-500-505)* AS WELL**	***PLEASE BID ON WATER (W-500-505)* AS WELL**					
GAS	**ITEM #**	**DESCRIPTION**	**SIZE**	**APPROVED PART #**	**ALTERNATE PART #**	**UNIT**	**EST QTY FY 26/27**	**BIDDER**	**UNIT PRICE**	**ESTIMATED DELIVERY TIME**
		METAL INSERTS								
G	243	METAL STIFFNER INSERTS, ELSTER PERFECTION	3/4" X 6"	74201		EA	5	Equipment Controls Co.	No Bid	
G	244	METAL STIFFNER INSERTS, ELSTER PERFECTION	1" X 6"	74203		EA	5	Equipment Controls Co.	No Bid	
G	245	METAL STIFFNER INSERTS, ELSTER PERFECTION	1 1/4" x 6"	74204		EA	5	Equipment Controls Co.	No Bid	
G	246	METAL STIFFNER INSERTS, ELSTER PERFECTION	1 1/2" x 6"	74206		EA	5	Equipment Controls Co.	No Bid	
G	247	METAL STIFFNER INSERTS, ELSTER PERFECTION	2" X 6"	74205		EA	5	Equipment Controls Co.	No Bid	
G	248	METAL STIFFNER INSERTS, ELSTER PERFECTION	3" X 6"	74210		EA	5	Equipment Controls Co.	No Bid	
GAS	**ITEM #**	**DESCRIPTION**	**SIZE**	**APPROVED PART #**	**ALTERNATE PART #**	**UNIT**	**EST QTY FY 26/27**	**BIDDER**	**UNIT PRICE**	**ESTIMATED DELIVERY TIME**
		MAGNESIUM ANODES								
G	253	ANODES, MAG	5#	ANODE - 5		EA	5	Equipment Controls Co.	No Bid	
G	254	ANODES, MAG	17#	ANODE - 7		EA	5	Equipment Controls Co.	No Bid	
GAS	**ITEM #**	**DESCRIPTION**	**SIZE**	**APPROVED PART #**	**ALTERNATE PART #**	**UNIT**	**EST QTY FY 26/27**	**BIDDER**	**UNIT PRICE**	**ESTIMATED DELIVERY TIME**
		TRACER WIRE								
G	259	TRACER WIRE - 12 GAUGE COPPER (500' ROLLS)		KRIS-TECH WIRE CW0177500		FT	30000	Equipment Controls Co.	No Bid	
GAS	**ITEM #**	**DESCRIPTION**	**SIZE**	**APPROVED PART #**	**ALTERNATE PART #**	**UNIT**	**EST QTY FY 26/27**	**BIDDER**	**UNIT PRICE**	**ESTIMATED DELIVERY TIME**
		ELECTROFUSION								
G	262	COUPLING; CENTRAL 4710 HDPE	1" X 1"	5760006		EA	30	Equipment Controls Co.	No Bid	
G	263	COUPLING; CENTRAL 4710 HDPE	2" X 2"	5760012		EA	20	Equipment Controls Co.	No Bid	
G	264	COUPLING; CENTRAL 4710 HDPE	3"	5757007		EA	10	Equipment Controls Co.	No Bid	

GAS MATERIALS BID LIST 2025-2026

G	265	COUPLING; CENTRAL 4710 HDPE	4"			EA	20	Equipment Controls Co.	No Bid	
G	266	COUPLING; CENTRAL 4710 HDPE	6"			EA	10	Equipment Controls Co.	No Bid	
G	267	COUPLING; CENTRAL-REDUCING 4710 HDPE	1" X 3/4"			EA	50	Equipment Controls Co.	No Bid	
G	268	COUPLING; CENTRAL-REDUCING 4710 HDPE	1" X 1/2"			EA	10	Equipment Controls Co.	No Bid	
G	269	COUPLING; CENTRAL-TAP TEE 4710 HDPE	2" x 3/4"				200	Equipment Controls Co.	No Bid	
G	270	COUPLING; CENTRAL-TAP TEE 4710 HDPE	2" X 1"			EA	100	Equipment Controls Co.	No Bid	
G	271	COUPLING; CENTRAL- TAP TEE 4710 HDPE	3" x 1"			EA	20	Equipment Controls Co.	No Bid	
G	272	COUPLING; CENTRAL-TAP TEE 4710 HDPE	4" x 3/4"				100	Equipment Controls Co.	No Bid	
G	273	COUPLING; CENTRAL-TAP TEE 4710 HDPE	4" X 1"			EA	100	Equipment Controls Co.	No Bid	
G	274	COUPLING; CENTRAL-TAP TEE 4710 HDPE	6" X 1"			EA	20	Equipment Controls Co.	No Bid	
G	275	COUPLING; CENTRAL-TAP TEE-HV 4710 HDPE	2" X 2"			EA	20	Equipment Controls Co.	No Bid	
G	277	COUPLING; CENTRAL-TAP TEE-HV 4710 HDPE	3" X 2"			EA	10	Equipment Controls Co.	No Bid	
G	278	COUPLING; CENTRAL-TAP TEE-HV 4710 HDPE	4" X 2"			EA	10	Equipment Controls Co.	No Bid	
G	279	COUPLING; CENTRAL-TAP TEE-HV 4710 HDPE	6" X 2"			EA	10	Equipment Controls Co.	No Bid	
GAS	**ITEM #**	**DESCRIPTION**	**SIZE**	**APPROVED PART #**	**ALTERNATE PART #**	**UNIT**	**EST QTY FY 26/27**	**BIDDER**	**UNIT PRICE**	**ESTIMATED DELIVERY TIME**
		EXCESS FLOW VALVES								
G	299	EXCESS FLOW VALVE SDR 11 IPS 4710 DRISCO 8300 SERIES 700	3/4"	MAC IPS SDR11 8300 BFS/700 EF	50098GB	EA	250	Equipment Controls Co.	$28.12	3-5 Week ARO
G	300	EXCESS FLOW VALVE SDR 11 IPS PLEXO 4710 SERIES 1800	1"	UMAC SERIES 1800 GREEN LABEL		EA	15	Equipment Controls Co.	$34.31	3-5 Week ARO
G	301	EXCESS FLOW VALVE SDR 11 IPS PLEXO 4710 SERIES 2600	1"	UMAC SERIES 2600 PINK LABEL		EA	10	Equipment Controls Co.	$34.31	3-5 Week ARO

GAS METER BID LIST 2025-2026

GAS	ITEM #	DESCRIPTION	SIZE	APPROVED PART #	ALTERNATE PART #	UNIT	EST QTY FY 26/27	BIDDER	UNIT PRICE	ESTIMATED DELIVERY TIME
		PREFABRICATED GAS ROTARY METER SETS								
G	7	METER SET; 3.5M ROTARY METER SET - WITHOUT METER/EVC	3.5M/3M	SEE DRAWING	N/A	EA	6	Equipment Controls Co.	No Bid	
G	8	METER SET; 5.5M ROTARY METER SET - WITHOUT METER/EVC	5.5M/5M	SEEDRAWING	N/A	EA	2	Equipment Controls Co.	No Bid	
G	9	METER SET; 9 M ROTARY METER SET - WITHOUT METER/EVC	9M/7M	SEE DRAWING	N/A	EA	2	Equipment Controls Co.	No Bid	
G	10	METER SET; 14 M ROTARY METER SET - WITHOUT METER/EVC	14M/11-16M	SEE DRAWING	N/A	EA	3	Equipment Controls Co.	No Bid	

GAS	ITEM #	DESCRIPTION	SIZE	APPROVED PART #	ALTERNATE PART #	UNIT	EST QTY FY 26/27	BIDDER	UNIT PRICE	ESTIMATED DELIVERY TIME
		DIAPHRAM GAS METERS								
G	15	METERS, AC 250 TC; ELSTER/AMERICAN - 5# CASE, 4 DIGIT ODM. INDEX; 20LT	AC 250	AC 250 TC 6" C-C	SENSUS R-275 TC 6" C-C	EA	250	Equipment Controls Co.	$141.94	9 Weeks ARO
G	16	METERS, AL 425 TC; ELSTER/AMERICAN - 10# CASE, 4 DIGIT ODM.INDEX; 30LT	AL 425	AL 425 TC 8.25" C-C	SENSUS R-415 TC 8.25" C-C	EA	150	Equipment Controls Co.	No Bid	
G	17	METERS, AC 630 TC; ELSTER/AMERICAN - 25# CASE, 4 DIGIT ODM. INDEX; 45 LT	AC 630	AC 630 TC 8.25" C-C	SENSUS SONIX 600 TC 6" C-C	EA	12	Equipment Controls Co.	$975.90	4-6 Weeks ARO
G	18	METERS, AL 800 TC; ELSTER/AMERICAN - 20# CASE, 5 DIGIT ODM. INDEX; 45 LT	AL 800	AL 800 TC 11" C-C	SENSUS SONIX 880 TC 6" C-C	EA	4	Equipment Controls Co.	$1,202.35	4-6 Weeks ARO
G	19	METERS, AL 1000 TC; ELSTER AMERICAN - 25# CASE, 5 DIGIT ODM. INDEX; 45 LT	AL 1000	AL 1000 TC 11" C-C	N/A	EA	2	Equipment Controls Co.	No Bid	

GAS	ITEM #	DESCRIPTION	SIZE	APPROVED PART #	ALTERNATE PART #	UNIT	EST QTY FY 26/27	BIDDER	UNIT PRICE	ESTIMATED DELIVERY TIME
		ROTARY GAS METERS								
G	23	3.5M RABO/ROOTS ROTARY METER,W/TCI INDEX, 5 DIGIT, CCF,THERMO-WELL W/GASKET AND BOLT INTSALL KIT,GASKET STRAINER,FULL FACE,RUBBER W/SS 40 MESH	3.5M/3M	G65/TCIRAB-BD-B1A-FAFA-GA-AA0CACACA-0000-00	B3:3M175 ROOTS	EA	6	Equipment Controls Co.	No Bid	
G	24	5.5M RABO/ROOTS ROTARY METER,W/TCI INDEX,5 DIGIT CCF ,THERMO-WELLW/GASKET AND BOLT INSTALL KIT,GASKET STRAINER,FULL FACE,RUBBER W/SS 40 MESH	5.5M/5M	G100/TCIRAB-BD-B1A-FAFA-GA-AA0CACACA-0000-00	B3:5M175 ROOTS	EA	2	Equipment Controls Co.	No Bid	
G	25	9 M RABO/ROOTS ROTARY METER, W/TCI INDEX ,5 DIGIT CCF,THERMO-WELL W/GASKET AND BOLT INSTALL KIT,GASKET STRAINER,FULL FACE,RUBBER W/SS 40 MESH	9M/7M	G160/TCIRAB-BD-B1A-FAFA-GA-AA0CACACA-0000-00	B3:7M175 ROOTS	EA	2	Equipment Controls Co.	No Bid	
G	26	14 M RABO/ROOTS ROTARY METER,W/TCI INDEX,5 DIGIT CCF ,THERMO-WELL W/ GASKET AND BOLT INSTALL KIT,GASKET STRAINER,FULL FACE,RUBBER W/SS 40 MESH	14M/11M	G250/TCIRAB-BD-B1A-FAFA-GA-AA0CACACA-0000-00	B3:11M175 ROOTS	EA	1	Equipment Controls Co.	No Bid	
G	26A	16M RABO/ROOTS ROTARY METER,W/TCI INDEX, 5 DIGIT, CCF,THERMO-WELL W/GASKET AND BOLT INTSALL KIT,GASKET STRAINER,FULL FACE,RUBBER W/SS 40 MESH	16M		B3:16M175 ROOTS	EA	2	Equipment Controls Co.	No Bid	
		*** ALL ROTARY METERS SHALL COME WITH AMR MOUNTING BRACKET**		22-1929						

GAS METER BID LIST 2025-2026

GAS	ITEM #	DESCRIPTION	SIZE	APPROVED PART #	ALTERNATE PART #	UNIT	EST QTY FY 26/27	BIDDER	UNIT PRICE	ESTIMATED DELIVERY TIME
		TURBINE GAS METERS								
G	27	METER, SENSUS T-18	4"	T-18		EA	1	Equipment Controls Co.	$12,925.17	36 Weeks ARO
G	28	METER, SENSUS AAT -18	4"	AAT-18		EA	1	Equipment Controls Co.	$22,582.41	36 Weeks ARO
G	29	METER, SENSUS AAT - 27	6"	AAT-27		EA	1	Equipment Controls Co.	$24,840.81	36 Weeks ARO
G	30	METER, SENSUS AAT - 57	6"	ATT-57		EA	1	Equipment Controls Co.	$27,158.18	36 Weeks ARO
G	31	METER;SENSUS AAT-60	8"	ATT-60		EA	1	Equipment Controls Co.	$30,477.82	36 Weeks ARO
GAS	ITEM #	DESCRIPTION	SIZE	APPROVED PART #	ALTERNATE PART #	UNIT	EST QTY FY 26/27	BIDDER	UNIT PRICE	ESTIMATED DELIVERY TIME
		ELECTRONIC CORRECTORS								
G	37	HONEYWELL EC-350 CORRECTOR W/10' DRIVE, 0-60PSI PRESSURE & TEMP		EC350-C0B-00200000-A-B15110-A1-MW,N3-200	GLE MPII MVC,INDEX.0-102PSI-TEMP#MVC-0047N	EA	3	Equipment Controls Co.	$2,556.30	8-10 Weeks ARO
G	38	HONEYWELL EC-350 CORRECTOR W/100' DRIVE, 0-300PSI PRESSURE & TEMP		EC350-E0B-00200000-A-B15110-A1-MW,N3-200	GLE MPII MVC,INDEX.0-290PSI-TEMP#MVC-0048N	EA	1	Equipment Controls Co.	$2,556.30	8-10 Weeks ARO
G	39	HONEYWELL TC-INDEX, FOR AMCO C-BODY ROTARY METERS		TCIAMC-BD-B1A-FAFA-BA-AA0AEBA0A-0000-00		EA	1	Equipment Controls Co.	No Bid	
G	40	HONEYWELL TC-INDEX, FOR ROOTS B3 & ROMET 3000 ROTARY METERS		TCIDB3-BD-B2A-FAFA-BA-AA0AEBA0A-0000-00		EA	1	Equipment Controls Co.	No Bid	
G	41	HONEYWELL TC-INDEX, FOR ROOTS B5 & ROMET 5000 ROTARY METERS		TCIRMT-BD-B2A-FAFA-BA-AAOAEBA0A-0000-00		EA	1	Equipment Controls Co.	No Bid	
G	42	HONEYWELL TC-INDEX, FOR RABO ROTARY METERS		TCIRAB-BD-B1A-FAFA-GA-AA0CACACA-0000-00		EA	1	Equipment Controls Co.	No Bid	
G	43	HONEYWELL TURBO CORRECTOR	SCMB-AAAA-AKAB0-OOAOO-A6AAB7-AAAABO-AFAGA-BACOE-OOO-000-OOOOO-C2			EA	1	Equipment Controls Co.	No Bid	
GAS	ITEM #	DESCRIPTION	SIZE	APPROVED PART #	ALTERNATE PART #	UNIT	EST QTY FY 26/27	BIDDER	UNIT PRICE	ESTIMATED DELIVERY TIME
		METER BARS								
G	44	1" METER BARS 20LT AC-250 METERS	1" 20 LT	SEE DRAWING	N/A	EA	250	Equipment Controls Co.	$96.03	10-12 Weeks ARO
G	45	1.25 " METER BARS 30LT AL-425 METERS	1.25" 30LT	SEE DRAWING	N/A	EA	150	Equipment Controls Co.	$104.63	10-12 Weeks ARO
G	50	METER BAR - METER BYPASS FOR AL-800 OR AL-1000 - 45 LT	45LT	SEE DRAWING	N/A	EA	4	Equipment Controls Co.	$658.00	10-12 Weeks ARO
G	51	METER BAR - METER BYPASS FOR AC-630 - 45 LT	45LT	SEE DRAWING	N/A	EA	2	Equipment Controls Co.	$476.00	10-12 Weeks ARO
G	52	METER BAR - METER BYPASS FOR AL-425 - 30 LT	30LT	SEE DRAWING	N/A	EA	2	Equipment Controls Co.	$615.12	10-12 Weeks ARO
GAS	ITEM #	DESCRIPTION	SIZE	APPROVED PART #	ALTERNATE PART #	UNIT	EST QTY FY 26/27	BIDDER	UNIT PRICE	ESTIMATED DELIVERY TIME
		METER MANIFOLDS								
G	54	METER BAR - TWO METER MANIFOLD;		SEE DRAWING	N/A	EA	1	Equipment Controls Co.	$272.00	10-12 Weeks ARO
G	55	METER BAR - THREE METER MANIFOLD;		SEE DRAWING	N/A	EA	1	Equipment Controls Co.	$317.00	10-12 Weeks ARO
G	56	METER BAR - FOUR METER MANIFOLD;		SEE DRAWING	N/A	EA	1	Equipment Controls Co.	$381.25	10-12 Weeks ARO
G	57	METER BAR - FIVE METER MANIFOLD;		SEE DRAWING	N/A	EA	1	Equipment Controls Co.	$465.80	10-12 Weeks ARO
G	58	METER BAR - SIX METER MANIFOLD;		SEE DRAWING	N/A	EA	1	Equipment Controls Co.	$158.66	10-12 Weeks ARO
GAS	ITEM #	DESCRIPTION	SIZE	APPROVED PART #	ALTERNATE PART #	UNIT	EST QTY FY 26/27	BIDDER	UNIT PRICE	ESTIMATED DELIVERY TIME
		RESIDENTIAL REGULATORS								
G	63	REGULATOR; SENSUS/AMERCIAN	3/4" X 1"	1813C	143-80-2	EA	200	Equipment Controls Co.	$64.71	11-12 Weeks ARO
G	64	REGULATOR; SENSUS/AMERICAN	1" x 1"	1813C	143-80-2	EA	50	Equipment Controls Co.	$64.71	11-12 Weeks ARO
GAS	ITEM #	DESCRIPTION	SIZE	APPROVED PART #	ALTERNATE PART #	UNIT	EST QTY FY 26/27	BIDDER	UNIT PRICE	ESTIMATED DELIVERY TIME
		COMMERCIAL REGULATORS								

GAS METER BID LIST 2025-2026

GAS	ITEM #	DESCRIPTION	SIZE	APPROVED PART #	ALTERNATE PART #	UNIT	EST QTY FY 26/27	BIDDER	UNIT PRICE	ESTIMATED DELIVERY TIME
G	68	REGULATOR; FISHER	2"	299H		EA	5	Equipment Controls Co.	No Bid	
G	69	REGULATOR; FISHER	2"	CS 400		EA	4	Equipment Controls Co.	No Bid	
G	71	REGULATOR;FISHER HIGH CAP RELEIF 2.5"VENT	2"	CS820-IQ		EA	4	Equipment Controls Co.	No Bid	
GAS	ITEM #	DESCRIPTION	SIZE	APPROVED PART #	ALTERNATE PART #	UNIT	EST QTY FY 26/27	BIDDER	UNIT PRICE	ESTIMATED DELIVERY TIME
		FARM TAP REGULATORS/RELIEFS								
G	75	REGULATOR, FARM TAP; FISHER/BELGAS	3/4"	627R-101	R62706020002010	EA	1	Equipment Controls Co.	No Bid	
G	76	REGULATOR; RELIEF; FISHER/BELGAS	1"	289H-49	P28908050000000	EA	1	Equipment Controls Co.	No Bid	
GAS	ITEM #	DESCRIPTION	SIZE	APPROVED PART #	ALTERNATE PART #	UNIT	EST QTY FY 26/27	BIDDER	UNIT PRICE	ESTIMATED DELIVERY TIME
		ITRON MODULES								
G	81	ITRON MODULE FOR TOP MOUNT METERS		ERG-5006-007/008		EA	20	Equipment Controls Co.	No Bid	
G	82	ITRON MODULE FOR AC 250-630 ,AL 425		ERG-5006-001		EA	250	Equipment Controls Co.	No Bid	
G	83	ITRON MODULE SENSUS 275		ERG-5006-002		EA	250	Equipment Controls Co.	No Bid	
G	84	ITRON MODULE SENSUS 415		ERG-5006-004		EA	150	Equipment Controls Co.	No Bid	
G	85	ITRON MODULE FOR REMOTE MOUNT METERS W/ TCI		ERG-5006-502/503/505		EA	20	Equipment Controls Co.	No Bid	

LEGAL NOTICE

INVITATION TO SUBMIT QUOTATIONS

The Town of Smyrna will accept quotations on the annual Gas, Water and Sewer materials for the Utilities Department. Bidders shall submit sealed quotations in the format specified in the Invitation to Submit Quotations no later than **2:00 p.m. May 19, 2026** at which time the bids will be publicly opened and read aloud. No bid may be withdrawn after the scheduled closing time for a period of 90 days. Bidding documents may be obtained at Smyrna Town Hall during regular business hours or www.townofsmyrna.org. Quotations should be mailed or hand delivered to:

Purchasing Department
Smyrna Town Hall
Sealed Bid on Annual Gas, Water & Sewer Materials
May 19 @ 2:00 p.m.
315 South Lowry Street
Smyrna, TN 37167

The Town of Smyrna will not discriminate in the purchase of all goods and services on the basis of race, color, religion, sex, national origin, age, disability or any other lawfully protected classification.

Verbal quotations, faxed quotations or quotations received after the closing date will not be accepted. The Town of Smyrna reserves the right to reject any and all bids, to waive technicalities or informalities and to accept any bid deemed to be in the best interest of the Town.

BY: Sierra Lowry
Finance Director

TO BE RUN: May 5, 2026

Ferguson Waterworks

COMPANY NAME

Thomas Masterson

TABLE OF CONTENTS

		PAGE
SECTION I -	GENERAL INFORMATION	3
SECTION II -	SPECIFICATIONS AND PRICE QUOTATION	5
	INSURANCE REQUIREMENTS	6
	AGREEMENT	10
SECTION III –	SPECIFICATION COMPLIANCE	16
	ATTACHMENT A	17

SPREADSHEETS & DRAWINGS

SECTION I – GENERAL INFORMATION

A. The Town of Smyrna desires to purchase annual gas, water and sewer materials for the Utilities Department for the fiscal year July 1, 2026 through June 30, 2027.

Location of Smyrna Town Hall:
315 South Lowry Street
Smyrna, TN 37167

Delivery Locations:
Gas: 108 G Street, Smyrna
Water & Sewer: 106 G Street, Smyrna
Call for delivery appointment.

B. Questions should be directed to Kevin Scott 615-479-4895. Email address: kevin.scott@townofsmyrna.org.

C. The Town of Smyrna reserves the right to reject any and all bids, to waive technicalities or informalities and to accept any bid deemed to be in the best interest of the Town. No bid may be withdrawn after the scheduled closing time for a period of 90 days.

D. The bidder shall abide by and comply with the true intent of the specifications and not take advantage of any unintentional error or omission, but shall fully address the full intent and meaning of each aspect of the specifications.

E. **Equals must be pre-approved by Kevin Scott prior to bid opening. All items to be ordered as needed**. Quantities are **estimated** on annual usage.

F. All materials in the bid documents have been placed into specific categories within each department. Each category shall be considered as a whole and not broken apart (See example in Attachment A).

G. Section II, III and contract Agreement shall be **completed** and **included** as an integral part of each bidder's proposal. Successful bidder will be expected to enter into a contract Agreement with the Town. Agreement shall be signed, but not dated, by the proper business representative and submitted **with** the bid proposal. An executed contract will be forwarded to winning vendor after Council approval.

H. Freight shall be paid by vendor and should be included in unit price bid.

I. The Town is a tax-exempt organization.

J. Mail is delivered after 11:00 a.m. Monday through Friday.

K. Bid quotations **must** be submitted on the Town's quotation page(s). No exceptions.

L. THIS ORDER WILL EXPIRE JUNE 30, 2027.

M. By submission of this bid, each bidder/proposer and each person signing on behalf of any bidder certifies, and in the case of a joint bid each party thereto certifies as to its own organization, under penalty of perjury, that to the best of its knowledge and belief that each bidder is not on the list created pursuant to T.C.A. § 12-12-106 Iran

Divestment Act. For reference purposes, the list is currently available online at: State of TN_Debarred_Vendors.pdf

SECTION II – SPECIFICATIONS AND PRICE QUOTATION

Base Bid Schedule

See Attached Spreadsheets

All materials have been placed into specific categories within each department. Each category shall be considered as a whole and not broken apart. An example of the format is included in Attachment A.

The Town of Smyrna has included a spreadsheet with this document. The spreadsheet has been included for bidding convenience. Each bidder is responsible for the information and mathematical accuracy. Please check and double check your bid prior to submitting.

ESTIMATED DELIVERY TIME MUST BE INCLUDED FOR ITEMS.

Compliance with laws:

The contractor must comply with all applicable federal and state law including the prevailing wage laws.

Contractor must provide adequate proof of insurance with the bid.

INSURANCE REQUIREMENTS

The Vendor shall purchase and maintain for the duration of the contract insurance against claims for injuries to persons or damages to property which may arise from or in connection with the performance of the work hereunder by the Vendor, its agents, representatives, employees or subcontractors.

A. MINIMUM SCOPE AND LIMITS OF INSURANCE

1. **Workers Compensation**
   Workers Compensation insurance shall be in compliance with the State of Tennessee and shall be statutory. Employers Liability shall be included with a minimum limit of $500,000 per accident/per disease/per employee.

2. **Commercial General Liability**
   Commercial General Liability insurance shall have a minimum limit per occurrence of $1,000,000 and a minimum general aggregate of $2,000,000. It shall include completed operations, product liability and personal injury liability insurance.

3. **Automobile Liability**
   Automobile Liability Insurance shall have a minimum combined single limit per occurrence of $1,000,000. This insurance shall include third-party bodily injury and property damage liability for owned, hired, borrowed and non-owned automobiles.

B. DEDUCTIBLES AND SELF-INSURED RETENTIONS

Any deductibles or self-insured retentions must be declared to the Town of Smyrna. The Vendor shall be responsible for all deductibles and self-insured retentions.

C. OTHER INSURANCE PROVISIONS

The policies are to contain, or be endorsed to contain, the following provisions:

1. General Liability and Automobile Liability Coverages

   a. The Town, its elected and appointed officials, agents, employees and volunteers shall be named as an additional insured as regards negligence by the vendor.

   b. The Vendor's insurance shall be primary as respects the Town, its elected and appointed officials, agents, employees and volunteers. Any insurance or

self-insurance maintained by the Town of Smyrna shall be excess and non-contributory of the Vendor's insurance.

2. Workers Compensation and Employers Liability Coverage

   The insurer shall agree to waive all rights of subrogation against the Town, its elected and appointed officials, agents, employees and volunteers for losses arising from work performed by the Vendor for the Town of Smyrna.

3. All Coverages

   a. Coverage shall not be canceled, suspended, or voided by either party (the Vendor or the insurer) or reduced in coverage or in limits except after 30 days written notice has been given to the Town of Smyrna. Ten-day written notice of cancellation is acceptable for non-payment of premium. Notifications shall comply with the standard cancellation provisions in the Vendor's policy.

   b. Neither the acceptance of the completed work nor the payment thereof shall release the Vendor from the obligations of the insurance requirements or indemnification agreement.

   c. The insurance companies issuing the policies shall have no recourse against the Town of Smyrna for payment of premiums or for assessments under any form of the policies.

   d. Replacement certificates, policies or endorsements shall be provided to the Town for any such insurance expiring prior to the completion of services.

   e. Any failure of the Vendor to comply with reporting provisions of the policy shall not affect coverage provided to the Town, its elected and appointed officials, agents, employees and volunteers.

D. ACCEPTABILITY OF INSURERS

All required insurance shall be provided by a company or companies licensed to conduct business in the State of Tennessee. Insurance shall be underwritten by insurers with an A.M. Best Company ratings no less than an A.

E. VERIFICATION OF COVERAGE

The Vendor shall furnish the Town with Certificates of Insurance reflecting proof of required coverage. The Certificates for each insurance policy are to be signed by a person authorized by that insurer to bind coverage on its behalf. **The Certificates are to be received and approved by the Town before work commences and upon any contract renewal thereafter.**

Upon failure of the Vendor to furnish, deliver and maintain such insurance as requested, this contract, at the election of the Town, may be suspended, discontinued or terminated. Failure of the Vendor to purchase and/or maintain any required insurance shall not relieve the Vendor from any liability or indemnification under the contract.

The Certificate of Insurance naming the "Town of Smyrna" as **Additional Insured** shall be addressed to the attention of:

Town of Smyrna
Department of Safety & Risk Management
ATTN: Henry Urbina
315 S Lowry St
Smyrna, TN 37167

It can also be submitted electronically to henry.urbina@townofsmyrna.org. The subject line has to indicate the name of the project.

The Town reserves the right to request complete certified copies of all required insurance policies at any time.

F. SUBCONTRACTORS

Vendor shall include all subcontractors as insureds under its policies **OR** shall be responsible for verifying and maintaining the Certificates provided by each subcontractor. Subcontractors shall be subject to all of the requirements stated herein. The Town of Smyrna reserves the right to request copies of subcontractor's Certificates at any time.

G. WORKERS' COMPENSATION INDEMNITY

In the event Vendor is not required to provide or is exempt from providing workers' compensation coverage, the parties hereby agree that Vendor, its owners, agents and employees will have no cause of action against, and will not assert a claim against the Town of Smyrna, its elected and appointed officials, agents, employees and volunteers, under any circumstances. The parties also hereby agree that the Town of Smyrna, its elected and appointed officials, agents, employees and volunteers shall in no circumstance be, or considered as, the employer or statutory employer of Vendor, its owners, agents and employees. The parties further agree that Vendor is a wholly independent vendor and is exclusively responsible for its employees, owners, and agents. Vendor hereby agrees to protect, defend, indemnify and hold the Town of Smyrna, its elected and appointed officials, agents, employees and volunteers harmless from any such assertion or claim that may arise from the performance of this contract.

HOLD HARMLESS AND INDEMNITY REQUIREMENT:

Vendor shall indemnify and hold harmless, to the maximum extent permitted by law, the Town of Smyrna and its officers, agents, employees, volunteers, from and against any and all liability, damages, losses, (whether in contract or in tort, including personal injury, accidental death or property damage, and regardless, of whether the allegations are false, fraudulent or groundless), and costs (including reasonable attorney's fees, litigation, arbitration, mediation, appeal expenses) which in whole or in part are caused by the negligence, recklessness or intentional wrongful misconduct of the Vendor and

persons employed by or utilized by the Vendor in Vendor's performance of this Agreement.

The vendor further agrees to protect, defend, and save the Town, its elected and appointed officials, agents, employees and volunteers while working in the scope of their duties as such, harmless from and against all claims, demands, and causes of action of any kind of character, including the cost of their defense, arising in favor of the vendor's employees or third parties on account of bodily or personal injuries, death or damage to property arising out of services performed or omissions of services or in any way resulting from the acts of omissions of the vendor and/or its agents, employees, subcontractors, representative of the Town under this agreement.

Pursuant to Tennessee Attorney General Opinion 93-01, the Town will not indemnify, defend or hold harmless in any fashion the Vendor from any claims arising from any failure, regardless of any language in any attachment or other document that the Vendor may provide.

APPLICABLE LAW:

Any contract resulting from this ISQ shall be governed by and construed under the laws of the State of Tennessee.

AGREEMENT

This Agreement is made and entered into as of this 19 day of May, 2026, by and between Ferguson Waterworks, a _____ (the "Bidder") and the Town of Smyrna, Tennessee, a Tennessee municipal corporation (the "Town") for the purpose of Annual Bid.

WHEREAS, the Bidder has submitted a quotation for the provision of certain products and/or services to the Town, all in accordance with the terms of the Invitation to Submit Quotations attached hereto and incorporated herein by reference as if set forth at length verbatim as Exhibit A (the "ISQ"), and which Proposal from the Bidder is attached hereto and incorporated herein by reference as if set forth at length verbatim as Exhibit B (the "Quotation"); the ISQ and the Quotation, together with any and all ancillary documents thereto, shall be collectively referred to herein as the "Bid Documents"; and

WHEREAS, the Town now desires to accept the Bidder's quotation, in accordance with the terms set forth in such Bid Documents.

NOW, THEREFORE, in consideration of the mutual covenants contained herein, and for other good and valuable consideration, the receipt and sufficiency of which is hereby acknowledged, the undersigned do hereby agree as follows:

1. Acceptance of Bid Documents. The terms of the Bid Documents, as incorporated herein by reference, are hereby accepted by the parties hereto. The Bidder hereby agrees to provide the goods and/or services contemplated by such Bid Documents in accordance with the terms set forth therein. The Town hereby accepts the Bidder's quotation to provide the goods and/or services contemplated by such Bid Documents in accordance with the terms set forth therein.

2. Entire Agreement. This Agreement, including the exhibits and any other documents referred to herein or therein, which form a part hereof, contains the entire understanding of the parties with respect to its subject matter. There are no restrictions, agreements, promises, warranties, covenants or undertakings other than those expressly set forth herein or therein. This Agreement supersedes all prior written or oral agreements and understandings between the parties with respect to its subject matter and may not be altered, modified or amended, in whole or in part, except by the express written authorization and consent of the parties hereto.

3. Severability. This agreement constitutes the product of negotiations of the parties hereto and any enforcement of hereof will be interpreted in a neutral manner and not more strongly against any party based upon the source of the draftsmanship of this Agreement. If any provision of this Agreement shall be held invalid or unenforceable by a court of competent jurisdiction, the remaining provisions hereof shall continue to be fully effective.

4. Limitation of Liability. The Town of Smyrna shall not be liable for any loss, claim, expense or damage caused by, contributed to or arising out of the acts or omission of Bidder or third parties, whether negligent or otherwise.

5. Warranties. The Bidder warrants to the Town that all materials and equipment furnished under this Contract will be new unless otherwise specified, and that all work will be of good quality, free from faults and defects, suitable for the purpose for which the materials and equipment are furnished, and in conformance with the Agreement. If it does not perform as warranted, Bidder shall use all commercially reasonable efforts to correct the product(s) so that it operates in all material respects in conformity with the written representations of Bidder. If Bidder cannot correct the product(s) within a reasonable period of time, Bidder shall refund the purchase price of the product(s). All work not conforming to these requirements, including substitutions not properly approved and authorized, may be considered defective.

6. Software Deadline, Testing and Acceptance: If applicable to the Agreement, software provided by Bidder shall be installed for the purposes of testing, as stated herein below, no later than one hundred twenty (120) days from the effective date of this Agreement unless the parties, in writing, set a different specific date. In Addition, software provided by Bidder to The Town is subject to inspection and testing to verify that the software conforms to its written specifications and to ensure it meets The Town's needs. The Town shall have seven (7) business days after the software is installed to perform testing of the software using The Town's data. The Town shall provide Bidder with written notice of acceptance or rejection of the software five (5) business days or less after the end of the testing period. If the Town does not provide timely written notice of acceptance or rejection to Bidder, the software shall be deemed to be accepted by The Town. If the software is rejected, The Town may, at its sole discretion, either (1) return the software and receive a refund of all fees paid with respect thereto, or (2) allow Bidder to repair or replace the software, without charge, in a timely manner. In the event The Town elects to allow the Bidder to repair or replace the software, The Town shall have an additional (7) business days in which to accept or reject the software as laid out hereinabove.

7. Use of The Town's Logo or Name: Bidder shall not use The Town's name or any logo in marketing or publicity materials or for marketing or publicity purposes without the prior written authorization from The Town. Bidder shall not issue, publish, or divulge any materials developed or used in the performance of this Agreement or make any statement to the media relating to this Agreement without the prior written consent of The Town.

8. Indemnification. The parties hereto agree that Bidder shall indemnify The Town for any and all claims of negligence, tortious conduct or otherwise unlawful acts committed by Bidder in the performance of their obligations under the terms of this agreement, including any and all attachments or exhibits thereto and Bidder agrees to pay any and all costs associated with the enforcement of the terms of this indemnity agreement by The Town, including but not limited to, court costs, civil judgments, assessments or any other reasonable fees associated therewith. This clause shall survive the expiration or termination of this Agreement and shall remain in full force and effect until the expiration of any applicable statute of limitation. In addition, Article II, Section 29 of the Tennessee Constitution prohibits municipalities from lending their credit to private of public entities and, therefore, prohibits an agreement by The Town to indemnify a third party or agree to a limitation of liability provision.

9. Non-Appropriation: Bidder acknowledges that The Town is a governmental entity, and the validity of this Agreement is based upon the availability of public funding under its authority. In the event The Town fails to appropriate funds or make monies available for any fiscal year covered by the term of this Agreement for services to be provided, this Agreement shall be terminated on the last day of the fiscal year for which funds were appropriated or monies made available for such purposes without liability to The Town, and such termination shall not be a breach of the Agreement, and any unused payment made to Bidder shall be returned to The Town.

10. Tax Exemption: As a tax-exempt entity, The Town shall not be responsible for sales or use taxes incurred for products or services. The Town shall supply Bidder with its Sales and Use Tax Exemption Certificate upon Bidder's request. Bidder shall bear the burden of providing its suppliers with a copy of The Town's tax exemption certificate and Bidder shall assume all liability for such taxes, if any, that should be incurred.

11. Attorney Fees. The parties hereto agree that The Town shall be in no event liable for any attorney's fees which Bidder may incur due to breach of this Agreement by either party; and further, The Town shall not acquiesce to any term in any document that indicates or infers The Town may or shall be responsible for the Attorney's fees of another party or the Bidder's attorney fees.

12. Boycott of Israel. The Bidder certifies that it is not currently engaged in, and covenants that it will not, for the duration of the Contract, engage in a Boycott of Israel, as that term is defined in Tenn. Code Ann. § 12-4-119.

13. Failure to perform. The parties agree, in the event Bidder fails to perform any obligation, other than with regards to the date of delivery, set out in this Agreement, the Town shall be reimbursed by Bidder for any and all expenses associated with having to obtain a new provider to finish out the contracted term, including, but in no way limited to, any charges/fees, which are above and beyond the amount the Town would have paid to Bidder to complete the same task; provided, however, that if the failure, by its nature, is one that can be cured, the Bidder shall have fifteen (15) business days after receipt of written notice from the Town to cure said failure to perform. The parties hereby agree, unless a specific date of delivery is provided in this Agreement or other bid documents, all deliveries shall be made to the Town no later than ninety (90) days from the date of order. The parties further agree that if Bidder, in good faith, is not able to meet this ninety (90) day deadline of delivery due to forces beyond his, her or its control, that were unforeseeable at the time of signing this contract, then this entire Agreement shall be voidable at the sole discretion of the Town. Should the Town elect to void this Agreement due to Bidder's good faith inability, due to forces beyond his, her or its control, and which were unforeseeable at the time of signing this Agreement to meet the delivery deadline, then neither party shall be deemed to have breached this Agreement, and Bidder shall return all monies, within seven (7) business days, paid by the Town for the products/items that could not be delivered in the allotted time.

14. Unilateral Modification of Agreement Not Permitted: Bidder may make unilateral changes to its Privacy Policy, provided any such changes are subject to the provisions of this Agreement but shall not materially alter the use of the service or reduce the level of protection provided to the Town at the time of the execution of this Agreement. Except as provided in the preceding sentence, notwithstanding anything in this Agreement to the contrary, any change to this Agreement made by Bidder that is not in writing and that is not properly executed by the signatures of authorized representatives of the parties hereto, including attestation by The Town's Clerk and approved as to form by the Town Attorney are subject to the terms and conditions of this Agreement.

15. Changes to Terms: Except as provided in Paragraph No. 13 above pertaining to Bidder's Privacy Policy, Bidder shall provide The Town written notice, sent in care of Town Attorney's Office, Smyrna, Tennessee, 315 South Lowry Street, Tennessee 37167, of any proposed change to this Agreement at least ninety (90) days prior to being effective to The Town. The Town shall have thirty (30) days after receiving the written notice to terminate this Agreement, and such cancellation shall not be a breach of this Agreement. Bidder will refund to The Town any payment made by The Town to Bidder equal to the difference between the number of months the payment was intended for and the number of months remaining on this Agreement that the fee was intended to cover.

16. Price Assurance: Unless specifically stated in this Agreement or other bid documents, the bid price shall be valid for the full term of this Agreement. If the Bidder, specifically states that he, she or it cannot honor the bid price for the full term of this Agreement; then this Agreement is voidable at the sole discretion of the Town, if at any time during the full term of this Agreement, Bidder requests to raise the bid

price. If the Town elects to void this Agreement, at its sole discretion, it shall not be deemed to be a breach of the contract by either party.

17. Confidentiality. The Town, as a Tennessee Municipal Corporation is subject to the Tennessee Open Records Act, set out in T.C.A. §10-7-503 et seq; therefore, this Agreement and all documents or materials, in any format, including, but not limited to paper, electronic or virtual, that are public records pursuant to law, are not confidential and are subject to disclosure. The Town will respond to all proper Open Records Requests in the time allowed by law, without any requirement to disclose such request to Bidder or provide Bidder with notice or the time to obtain a protective order. The Town does not have the burden of establishing that information is not confidential information or that its release is authorized to release the records. This section 16 serves to meet such burden and authorization of disclosure.

18. Mediation. The Town may, at its option, require the attempted resolution of any dispute arising under this Agreement by mediation prior to the filing of any lawsuit or other claim. Should any dispute arise, Bidder shall provide the Town notice of any intent to file suit by certified mail. The Town shall notify the Bidder of its intent to exercise its right to mediation within thirty (30) days of receiving such notice. If the Town does not exercise its right to mediation, Bidder may file suit. Any mediator selected under this clause shall be agreed upon by the parties and the costs of such mediation shall be divided and paid equally between the parties.

19. No Presumption Against Drafter: The parties are both business entities having substantial experience with the subject matter of this Agreement, and each has fully participated in the negotiation and drafting of this Agreement. Accordingly, this Agreement shall be construed without regard to the rule that ambiguities in a document are to be construed against the draftsman. No inferences shall be drawn from the fact that the final, duly executed Agreement differs in any respect from any previous draft hereof.

20. Governing Law. This Agreement shall be deemed to have been executed and delivered within the State of Tennessee, and the rights and obligations of the parties shall be construed and enforced in accordance with, and governed by, the laws of the State of Tennessee. The parties agree that all obligations of the parties are performable in Smyrna, Tennessee.

21. Choice of Forum and Venue. The parties' choice of forum and venue shall be exclusively in the courts of Rutherford County, Tennessee or the United States District Court, for the Middle District of Tennessee. The parties hereby waive their right to a jury trial. Any provision of the Agreement held to violate a law or regulation shall be deemed void, and all remaining provisions shall continue in force.

IN WITNESS WHEREOF, the undersigned have executed this Agreement as of the date set forth above.

TOWN OF SMYRNA, TENNESSEE

By: _____
Name: Mary Esther Reed
Title: Mayor

ATTEST:

_____
Amber Hobbs, Town Clerk

BIDDER:

By: Jackson Higgins
Title: Sales rep.

ATTEST:

Thank you for
Sales rep.

SECTION III - SPECIFICATIONS COMPLIANCE

Unless otherwise noted, all quotations for the annual gas, water and sewer materials shall be in complete accordance with the specifications detailed herein.

Bidders shall note in the space provided below any exceptions or deviations in any way from the specifications of any section of this ISQ. Bidders should provide complete detail of exceptions or deviations.

Proposal Exceptions

Section	Brief Description
Water	Valve Box risers (offering own brand)
Water	Offering Sigma Megalugs
~~Water~~	~~Offering [illegible] bolt/gasket~~ kit
Water	Offering own brand MJ bolt & Gasket Kit.
Water	Offering AFC gate valves

By signature below, vendor acknowledges any quotation to be in full compliance with all aspects of each section of the ISQ not noted above. The undersigned hereby declares that no person or party other than the undersigned has any interest whatever in this proposal, that it is without any connection or collusion with any person or persons making or having made any proposal for the same work and without any previous understanding with such person or persons as to relative prices, obviating competition, and that it is made in good faith.

Ferguson Waterworks	615-838-9130
COMPANY	TELEPHONE NUMBER
Jackson Higgins	Sales rep.
REPRESENTATIVE NAME	REPRESENTATIVE TITLE
[signature]	jackson.higgins1@ferguson.com
SIGNATURE	E-MAIL ADDRESS

Attachment A

Cutoffs							
	Estimated	Vendor A		Vendor B		Vendor C	
DESCRIPTION	Bid Qty	Unit Price	Cost	Unit Price	Cost	Unit Price	Cost
3/4" STOPCOCK; JOMAR 241-004B	150	$12.00	$1,800.00	$9.00	$1,350.00	$1.00	$150.00
3/4" STOPCOCK, HIGH PRESSURE, MUELLER	20	$18.00	$360.00	$17.00	$340.00	$2.00	$40.00
1" STOPCOCK; JOMAR 241-005B	30	$13.75	$412.50	$13.00	$390.00	$3.00	$90.00
1 1/4" STOPCOCK; 175 MAOP MUELLER	10	$14.50	$145.00	$16.00	$160.00	$4.00	$40.00
1 1/2" STOPCOCK; 175 MAOP MUELLER	10	$15.00	$150.00	$14.00	$140.00	No Bid	$0.00
2" STOPCOCK; 175 MAOP MUELLER	30	$16.00	$480.00	$20.00	$600.00	$6.00	$180.00
	Totals		$3,347.50		$2,980.00		$500.00
	Low Bidder						
	Incomplete Bid						

Category Calculation Guidelines:

1. Multiply estimated quantity times bid unit price for cost of each category item
2. Add costs in category for each vendor to obtain category total cost per vendor
3. Any unit price omitted from category will result in incomplete bid for given category
4. Low bidder, meeting all other requirements, shall be awarded the entire category

CERTIFICATE OF LIABILITY INSURANCE

DATE (MM/DD/YYYY) 5/13/2026

5/1/2027

THIS CERTIFICATE IS ISSUED AS A MATTER OF INFORMATION ONLY AND CONFERS NO RIGHTS UPON THE CERTIFICATE HOLDER. THIS CERTIFICATE DOES NOT AFFIRMATIVELY OR NEGATIVELY AMEND, EXTEND OR ALTER THE COVERAGE AFFORDED BY THE POLICIES BELOW. THIS CERTIFICATE OF INSURANCE DOES NOT CONSTITUTE A CONTRACT BETWEEN THE ISSUING INSURER(S), AUTHORIZED REPRESENTATIVE OR PRODUCER, AND THE CERTIFICATE HOLDER.

IMPORTANT: If the certificate holder is an ADDITIONAL INSURED, the policy(ies) must have ADDITIONAL INSURED provisions or be endorsed. If SUBROGATION IS WAIVED, subject to the terms and conditions of the policy, certain policies may require an endorsement. A statement on this certificate does not confer rights to the certificate holder in lieu of such endorsement(s).

PRODUCER Lockton Companies, LLC DBA Lockton Insurance Brokers, LLC in CA CA license #0F15767 3280 Peachtree Rd. NE, Ste. 1000 Atlanta GA 30305 (404) 460-3600	**CONTACT NAME:** **PHONE (A/C, No, Ext):** **FAX (A/C, No):** **E-MAIL ADDRESS:**
INSURED 1531924 Ferguson US Holdings, Inc. Ferguson Enterprises, LLC (See attached for named insured listing) 751 Lakefront Commons Newport News VA 23606	**INSURER(S) AFFORDING COVERAGE** — **NAIC #** **INSURER A :** ACE American Insurance Company — 22667 **INSURER B :** ACE Property and Casualty Insurance Company — 20699 **INSURER C :** Indemnity Insurance Co of North America — 43575 **INSURER D :** ACE Fire Underwriters Insurance Company — 20702 **INSURER E :** **INSURER F :**

COVERAGES **CERTIFICATE NUMBER:** 21650742 **REVISION NUMBER:** XXXXXXX

THIS IS TO CERTIFY THAT THE POLICIES OF INSURANCE LISTED BELOW HAVE BEEN ISSUED TO THE INSURED NAMED ABOVE FOR THE POLICY PERIOD INDICATED. NOTWITHSTANDING ANY REQUIREMENT, TERM OR CONDITION OF ANY CONTRACT OR OTHER DOCUMENT WITH RESPECT TO WHICH THIS CERTIFICATE MAY BE ISSUED OR MAY PERTAIN, THE INSURANCE AFFORDED BY THE POLICIES DESCRIBED HEREIN IS SUBJECT TO ALL THE TERMS, EXCLUSIONS AND CONDITIONS OF SUCH POLICIES. LIMITS SHOWN MAY HAVE BEEN REDUCED BY PAID CLAIMS.

INSR LTR	TYPE OF INSURANCE	ADDL INSD	SUBR WVD	POLICY NUMBER	POLICY EFF (MM/DD/YYYY)	POLICY EXP (MM/DD/YYYY)	LIMITS	
A	X COMMERCIAL GENERAL LIABILITY [ ] CLAIMS-MADE [X] OCCUR X Retained Limit $4m GEN'L AGGREGATE LIMIT APPLIES PER: [ ] POLICY [X] PRO-JECT [X] LOC [ ] OTHER:	Y	N	XSL G49384622	5/1/2026	5/1/2027	EACH OCCURRENCE DAMAGE TO RENTED PREMISES (Ea occurrence) MED EXP (Any one person) PERSONAL & ADV INJURY GENERAL AGGREGATE PRODUCTS - COMP/OP AGG $	$ 1,000,000 $ 1,000,000 $ 5,000 $ 1,000,000 $ 10,000,000 $ 10,000,000 $
A	AUTOMOBILE LIABILITY X ANY AUTO [ ] OWNED AUTOS ONLY [ ] SCHEDULED AUTOS X HIRED AUTOS ONLY X NON-OWNED AUTOS ONLY X Self Insured X Physical Damage	Y	N	ISA H1137296A	5/1/2026	5/1/2027	COMBINED SINGLE LIMIT (Ea accident) BODILY INJURY (Per person) BODILY INJURY (Per accident) PROPERTY DAMAGE (Per accident) Deductible	$ 5,000,000 $ XXXXXXX $ XXXXXXX $ XXXXXXX $ 5,000,000
B	X UMBRELLA LIAB X OCCUR EXCESS LIAB [ ] CLAIMS-MADE [ ] DED [ ] RETENTION $	N	N	XOO G72519802 006	5/1/2026	5/1/2027	EACH OCCURRENCE AGGREGATE $	$ 10,000,000 $ 10,000,000 $ XXXXXXX
C A D	WORKERS COMPENSATION AND EMPLOYERS' LIABILITY ANY PROPRIETOR/PARTNER/EXECUTIVE OFFICER/MEMBER EXCLUDED? Y/N [N] N/A (Mandatory in NH) If yes, describe under DESCRIPTION OF OPERATIONS below		Y	WLR C72808162 (AOS) WLR C72808150 (OR) SCF C72808174 (WI)	5/1/2026 5/1/2026 5/1/2026	5/1/2027 5/1/2027 5/1/2027	X PER STATUTE [ ] OTH-ER E.L. EACH ACCIDENT E.L. DISEASE - EA EMPLOYEE E.L. DISEASE - POLICY LIMIT	$ 2,000,000 $ 2,000,000 $ 2,000,000

DESCRIPTION OF OPERATIONS / LOCATIONS / VEHICLES (ACORD 101, Additional Remarks Schedule, may be attached if more space is required)

THIS CERTIFICATE SUPERSEDES ALL PREVIOUSLY ISSUED CERTIFICATES FOR THIS HOLDER, APPLICABLE TO THE CARRIERS LISTED AND THE POLICY TERM(S) REFERENCED.

Workers Compensation/Employers Liability Deductible: $2,000,000; Workers Compensation Policy WLR C72808162 provides coverage for AK, AL, AR, AZ, CA, CO, CT, DC, DE, FL, GA, HI, IA, ID, IL, IN, KS, KY, LA, MA, MD, ME, MI, MN, MO, MS, MT, NC, NE, NH, NJ, NM, NV, NY, OK, PA, RI, SC, SD, TN, TX, UT, VA, VT, WV-$2,000,000 Stop Gap Liability is provided for OH, WA, ND, and WY *** See Page 2 ***

CERTIFICATE HOLDER

21650742
Town of Smyrna
Department of Safety & Risk Management
Attn: Henry Urbina
315 S Lowry St.
Smyrna, TN 37167

CANCELLATION See Attachments

SHOULD ANY OF THE ABOVE DESCRIBED POLICIES BE CANCELLED BEFORE THE EXPIRATION DATE THEREOF, NOTICE WILL BE DELIVERED IN ACCORDANCE WITH THE POLICY PROVISIONS.

AUTHORIZED REPRESENTATIVE

© 1988-2015 ACORD CORPORATION. All rights reserved.

The ACORD name and logo are registered marks of ACORD

CONTINUATION DESCRIPTION OF OPERATIONS/LOCATIONS/VEHICLES/EXCLUSIONS ADDED BY ENDORSEMENT/SPECIAL PROVISIONS (Use only if more space is required)

Town of Smyrna, its elected and appointed officials, agents, employees and volunteers are Additional Insured on General Liability and Auto Liability, on a Primary and Non-Contributory Basis, if required by written contract. Waiver of Subrogation applies in favor of additional insured as required by written contract as respect to Workers Compensation, subject to terms, conditions and exclusions where applicable by state law. 30 Day Notice of Cancellation/Non-renewal, except 10 days for nonpayment of premium, to the certificate holder when required by written agreement.

NAMED INSURED ADDENDUM

Effective Date	Company
6/16/2003	A-1 Pipe
5/23/2022	Aaron & Company, LLC
4/1/1975	Acquisition - Charleston, SC
8/20/2018	Action Automation
11/16/2015	Action Fire Fab & Supply, Inc.
7/15/2019	Action Supply Co.
12/1/2022	Airefco, Inc
3/13/2006	Alamo Pipe
3/30/1999	Alamo Plumbing Supply Co.
1/11/2021	Amerock Corporation
4/4/2016	Andrews Lighting Gallery, Inc.
3/21/2022	AP Supply Company
4/27/2015	Arkansas Supply, Inc.
8/2/1993	Armstrong Plumbing Supply Company, Inc.
10/19/2015	Atlantic American Fire Equipment Company
11/16/2020	Atlantic Construction Fabrics
11/1/1977	Atlas Supply Company, Inc.
6/27/1994	Automatic Temperature Supplies Inc.
4/22/2024	AVCO Supply (AVCO Supply, Inc.)
9/15/1999	Baker Pipe and Supply Company
12/11/2018	Blackman
7/30/2018	Brock McVey
7/31/2023	Bruce Supply Corp
5/23/2016	Bruce-Rogers Company
2/9/2015	Builders Appliance Center
1/19/2004	Builder's Plumbing Supply
12/29/1989	C. Selzer & Sons, Inc.
3/4/1992	Cain & Bulirnan, Inc.
12/29/2006	Cal-Steam
10/17/2005	Camellia Valley Supply
5/9/2022	Canadian Safe-Step Tubs, Inc.
7/26/2021	Canyon Pipe & Supply
1/8/2024	Capital City Appliances LLC dba Harway Appliances
10/29/2018	Capital Distributing
5/31/2014	Capstone Global Solutions
10/2/2006	Castle North
10/2/2006	Castle Supply
5/5/1997	Central Engineering and Supply, Co., Inc.
5/22/2006	Central Lighting Supply

3/10/1983	Central Plumbing Supply Company
5/8/2006	Central Supply
3/16/1992	Chatham Pipe & Supply
8/25/1997	Cities Supply Company, Inc.
1/21/2026	Chesapeake Environmental Equipment
11/22/2004	Clark Supply
1/11/2021	Clarksville Lighting and Appliance
8/1/2016	Clawfoot Supply LLC d/b/a Signature Hardware
4/8/2002	Clayton Acquisition Company
10/8/1997	Climate Makers of Charleston, Inc.
9/1/2004	Cline Contract Sales
1/9/2006	Colgan
3/13/2020	Columbia Pipe & Supply
2/26/1996	Columbia Supply Corporation
4/1/1990	Consumer's Supply Company, Inc.
9/12/2005	Contractor's Field Products
10/30/1984	Cooper Supply Company
2/20/2017	Custom Lighting & Hardware
7/18/2022	D2 Land & Water Resource, Inc
8/27/2007	Davidson Pipe & Supply
4/24/2006	Davies Water
10/1/2012	Davis & Warshow
4/18/2016	Dealernet, LLC
2/21/2006	Dixie Plumbing Supply
10/22/2018	Dogwood Building Supply
1/24/2000	Donovan Industrial Supply Corporation
9/1/2009	DPS
1/22/2018	Duhig Stainless
1/25/1999	Dunaway's Wides Pipe & Supply Co., Jnc.
6/12/2000	Eastern Sewer Pipe Corp.
5/18/2015	Ecomfort Holdings Inc.
9/19/2005	Economy Plumbing Supply
9/30/2005	Endries International
10/29/1993	Energy & Process Corporation
3/9/2015	Equarius Waterworks, Inc.
7/1/1998	Esco Supply Company
4/28/2014	Factory Direct Appliance
8/27/2018	FE Products Inc.
9/11/2000	Ferguson Fire & Fab, Inc
3/31/2019	Ferguson Enterprises, LLC
12/23/1998	Fields & Company of Lubbock, Inc.
7/30/2007	Fire Fab
9/11/2000	Fire Protection Supply Company

2/11/2013	Fluid Systems Hawaii, Inc.
6/1/1998	Forward Enterprises
4/25/2022	Founders Kitchen & Bath, Inc.
11/30/2005	Frischkorn
5/1/2005	Full Service Supply
11/1/2021	Galkos Construction (Safe Step Walk In Tubs)
5/16/2024	GAR Engineering
10/15/1996	General Plumbing Supply Co. of MD, Inc.
1/5/1988	Geo. McGinley Supply Co., Inc.
7/30/2024	Gerster Equipment Co.
11/17/2014	Global HVAC Distributors, Inc.
8/4/1999	Goldberg Company (GCI)
5/20/1991	Gonnan Air Conditioning Company, Inc.
9/24/2018	Grand Junction Pipe & Supply
9/30/1996	Great Lakes Plumbing Supply, Inc.
2/7/2007	Grif-Fab
11/7/2011	Groeniger
1/29/2024	Grove Supply, Inc.
11/7/2022	Guarino Distributing Co, LLC
10/16/2006	Gulf Refrigeration
12/18/2006	Guntersville Fab
4/14/2003	Hanco Supply, Inc.
1/8/2024	Harway Supply, LLC
12/15/2003	High Country
9/18/2017	HM Wallace, Inc.
11/13/2021	Hot Water Products, Inc.
6/9/2014	HP Products (and HP Logisitics)
6/17/2025	HPS Specialties, LLC
10/4/1993	Hub Inc.
6/2/2003	Huskey, Inc.
2/28/2007	Improvement Direct
3/31/2025	Independent Pipe & Supply Corp.
3/20/2006	Indiana Plumbing Supply
7/29/2019	Innovative Soil Solutions
11/23/1996	J&G Products Company, Inc.
12/15/1997	Jaime Salicrup, Inc.
1/28/2019	James Martin Furniture
12/30/2007	JC Plumbing
1/31/2005	JD Daddario
11/5/2007	JD Wholesale
8/13/2018	Jones Stephens
8/18/2014	Joseph G. Pollard Co. Inc.
10/16/2006	Kandall

1/20/2014	Karl's Sales and Service - Karls Appliance
7/25/2023	Kennedy Companies
2/4/2019	Kitchen Art
6/21/2021	Kitchen Showcase
10/29/1998	L&H Plumbing & Heating Supply
11/7/2005	LAB Appliances
10/2/2006	Lawrence Supply
1/29/1988	LBS Supply, Inc.
9/15/2003	Liberty Equipment
4/15/2025	Light Innovations, Inc.
7/9/2018	Lighting Design Center
4/4/2022	Lighting Plus
3/27/2017	Lighting Unlimited, LLC
7/31/2010	Lincoln Products
4/7/2003	Linwood Pipe and Supply Co., Inc.
10/1/2015	Living Direct, Inc.
8/29/2011	Louisiana Chemical PVF
6/5/1995	Lyon, Conklin & Co., Inc.
7/22/2025	Manufactured Duct & Supply
2/18/2008	Mastercraft Cabinets
12/12/2016	Matera Paper Company, Inc.
12/8/2014	McFarland Supply Co., Inc.
5/1/1984	McKenna Supply Company
2/8/2005	Meckco Supply
9/20/2021	Meyer Appliances, Kitchens and Baths
7/11/2016	Michigan Meter Technology Group, Inc.
6/13/2016	Michigan Pipe and Valve-Flint, Inc.
6/27/2016	Michigan Pipe and Valve-Lansing, Inc.
6/18/2001	Mid-Cities - Dallas, TX
5/21/2001	Mid-Cities - Plant City, FL
6/1/1999	Midwest Pipe & Supply
7/25/2022	Minka Lighting LLC
6/3/2019	Mission Valley Pipe and Supply
11/15/2005	Mobile Supply
8/29/2022	Monark Premium Appliance (Transform Midco LLC)
7/12/2021	Moore Industrial Supply, Co.
3/29/2004	Municipal Pipe
5/14/2018	National Fire
10/2/2006	Northern Water Works Supply
10/26/2020	Old Dominion Supply
12/4/2006	Ondalay Pipe
2/13/2017	P.V. Sullivan

12/11/2006	Page's Appliance
8/1/2006	Palermo
8/15/2005	Park Supply
12/31/2004	Parnell Martin
8/21/2000	Pesco Pipe and Supply Co.
4/10/2006	Pipe Products
1/30/2023	Pipelines, INC
1/29/2024	PLCC Enterprises LLC
4/26/1999	Plumbers Specialty Company, Inc.
1/24/2022	Plumbers Supply Company of St Louis
1/15/1985	Plumbers Supply Company, Inc.
3/6/2000	Plumbing & Mill Supplies, Incorporated
9/14/2014	Powell Pipe & Supply Co.
9/25/2012	Power Equipment Direct, Inc. (PED)
12/5/2022	Power Process Equipment Co
9/9/2019	Process Instruments & Controls
1/25/2016	Professional Cleaning Service and Supply Corporation (PCS Industries)
12/7/2004	R Supply
6/4/1985	R. W. Farmer Supply Co., Inc.
9/22/1997	Raleigh Supply Company, Inc.
10/10/2016	Ramapo Wholesalers Inc.
3/1/2001	Red Hed Supply
3/16/2015	Redlon & Johnson Supply
4/23/2012	Reese Kitchens
3/16/2020	Rencor Controls
10/27/2015	Renwes Appliances, Inc.
6/24/2025	Ritchie Environmental Solutions, LLC
1/1/1984	Riverside Supply Company, Inc.
11/19/2018	Roberston Supply
11/22/2021	RP Lighting & Fans (Royal Pacific)
7/26/2022	Rybak Engineering. Inc
8/24/2015	S&P Investment, Inc. (dba - Central Pipe & Supply)
8/29/2005	S&S Fabricators
6/13/2023	S.G. Torrice
4/15/2024	Safe Step Walk In Tub, LLC
7/31/2018	Safe Step Walk-In Tub Co
12/31/1980	SCL Equipment Corporation
10/16/2023	SecureVision of America
9/26/2011	SG Supply
12/8/2014	Ship-Pac, Inc.
11/3/1997	South Bend Supply Company, Inc.

12/19/2005	South Lake Tahoe
5/1/1976	Southern States Supply Company, Inc.
5/20/2024	Southwest GeoSolutions, Inc.
10/6/2014	Spillius, Inc. (dba City Lights and Design)
6/30/1997	Standard of Lynn, Inc.
5/25/2022	STE LLC
1/7/1998	Steel City Wholesalers
12/31/2010	Summit Pipe & Supply
5/6/2002	Sumner & Dunbar
1/8/2001	Sunbelt Marketing
10/25/2021	Sunstate Meters and Supply, Inc
5/22/2006	Supply North Central Group
11/11/2019	SW Anderson
5/13/2002	Tahoe Truckee Supply
2/17/2026	Technology Sales Associates, Inc.
11/13/2024	Templeton & Associates Equipment Sales
11/13/2024	TEMSCO
12/30/1986	Terry Supply Company
1/8/2024	Texas State Appliances, LLC
2/23/2015	The Ar-Jay Center
4/18/2016	The Bath + Beyond
8/30/1999	The Gage Company
10/24/2016	The Plumbing Source, Inc.
1/7/1986	The Warner Company, Inc.
8/2/1999	Thrall Distribution, Inc.
3/30/1998	Tozour Unitary Product Division
1/13/2003	Triangle Supply, Inc.
6/27/2022	Triton Environmental, LLC
11/2/1992	U.S. Supply Company
2/7/2022	Uncle Sam Piping Solutions. Inc.
11/14/2016	Underground Pipe & Valve, Inc.
10/1/1986	Underground Supply Company, Inc.
8/21/2006	United Automatic
5/23/2005	United Supply & Distributing
7/30/2024	United Water Works, Inc.
1/28/1983	Universal Supply Company, Inc.
12/31/1986	Virginia Supply and Well Company
11/13/1995	Walden Industrial Supply Co., Inc.
12/10/2018	Wallwork Bros., Inc
3/31/2014	Waterworks Industries
8/1/2006	Waterworks Supply
6/26/2005	Webb Distributors, Inc.
6/30/2001	Westburne Supply, Inc.

8/13/2007	Western Air
8/29/2016	Westfield Lighting Co., Inc.
8/7/2017	Wholesale Group, Inc.
7/10/1995	Wilmington Plumbing Supply Co., Inc.
12/18/1995	Wisconsin River Supply Company
1/29/2024	Wolfe Family Partnership, Ltd
6/8/2015	WR White Supply
7/2/2018	Wright Plumbing
1/29/2024	Wvhc Enterprises, LLC
1/13/2003	York Factory Branch - Corona, CA
3/4/2024	Yorkwest Plumbing Supply Inc.

ADDITIONAL INSURED - OWNERS, LESSEES OR CONTRACTORS - SCHEDULED PERSON OR ORGANIZATION

Named Insured			Endorsement Number
Ferguson US Holdings Inc.			1
Policy Symbol	Policy Number	Policy Period	Effective Date of Endorsement
XSL	G49384622	05/01/2026 to 05/01/2027	
Issued By (Name of Insurance Company)			
ACE American Insurance Company			

Insert the policy number. The remainder of the information is to be completed only when this endorsement is issued subsequent to the preparation of the policy.

THIS ENDORSEMENT CHANGES THE POLICY. PLEASE READ IT CAREFULLY.

This Endorsement modifies insurance provided under the following:

EXCESS COMMERCIAL GENERAL LIABILITY POLICY

SCHEDULE

Name Of Additional Insured Person(s) Or Organization(s):	Location(s) Of Covered Operations
Any Owner, Lessee or Contractor whom you have agreed to include as an additional insured under a written contract, provided such contract was executed prior to the date of loss.	All locations where you are performing ongoing operations for such additional insured pursuant to any such written contract.
Information required to complete this Schedule, if not shown above, will be shown in the Declarations.	

A. Section II — Who Is An Insured is amended to include as an additional insured the person(s) or organiza-tion(s) shown in the Schedule, but only with respect to liability for "bodily injury", "property damage" or "personal and advertising injury" caused, in whole or in part, by:

1. Your acts or omissions; or
2. The acts or omissions of those acting on your behalf;

in the performance of your ongoing operations for the additional insured(s) at the location(s) designated above.

However:

1. The insurance afforded to such additional insured only applies to the extent permitted by law; and
2. If coverage provided to the additional insured is required by a contract or agreement, the insurance afforded to such additional insured will not be broader than that which you are required by the contract or agreement to provide for such additional insured.

B. With respect to the insurance afforded to these additional insureds, the following additional exclusions apply: This insurance does not apply to "bodily injury" or "property damage" occurring after:

1. All work, including materials, parts or equipment furnished in connection with such work, on the project (other than service, maintenance or repairs) to be performed by or on behalf of the additional insured(s) at the location of the covered operations has been completed; or

Copyright, Insurance Services Office, Inc., 2012

2. That portion of "your work" out of which the injury or damage arises has been put to its intended use by any person or organization other than another contractor or subcontractor engaged in performing operations for a principal as a part of the same project.

C. With respect to the insurance afforded to these additional insureds, the following is added to **Section III —Limits Of Insurance And Retained Limit:**

If coverage provided to the additional insured is required by a contract or agreement, the most we will pay on behalf of the additional insured is the amount of insurance:

1. Required by the contract or agreement; or

2. Available under the applicable Limits of Insurance shown in the Declarations;

whichever is less.

This endorsement shall not increase the applicable Limits of Insurance shown in the Declarations.

Authorized Representative

Copyright, Insurance Services Office, Inc., 2012

ADDITIONAL INSURED - OWNERS, LESSEES OR CONTRACTORS - COMPLETED OPERATIONS

Named Insured			Endorsement Number
Ferguson US Holdings Inc.			12
Policy Symbol	Policy Number	Policy Period	Effective Date of Endorsement
XSL	G49384622	05/01/2026 to 05/01/2027	
Issued By (Name of Insurance Company)			
ACE American Insurance Company			

Insert the policy number. The remainder of the information is to be completed only when this endorsement is issued subsequent to the preparation of the policy.

THIS ENDORSEMENT CHANGES THE POLICY. PLEASE READ IT CAREFULLY.

This Endorsement modifies insurance provided under the following:

EXCESS COMMERCIAL GENERAL LIABILITY POLICY

SCHEDULE

Name Of Additional Insured Person(s) Or Organization(s):	Location And Description Of Completed Operations
Any person or organization whom you have agreed to include as an additional insured under a written contract, provided such contract was executed prior to the date of loss.	All locations where you perform work for such additional insured pursuant to any such written contract.
Information required to complete this Schedule, if not shown above, will be shown in the Declarations.	

A. Section II — Who Is An Insured is amended to include as an additional insured the person(s) or organiza-tion(s) shown in the Schedule, but only with respect to liability for "bodily injury" or "property damage" caused, in whole or in part, by "your work" at the location designated and described in the Schedule of this endorsement performed for that additional insured and included in the "products-completed operations hazard".

However:

1. The insurance afforded to such additional insured only applies to the extent permitted by law; and
2. If coverage provided to the additional insured is required by a contract or agreement, the insurance afforded to such additional insured will not be broader than that which you are required by the contract or agreement to provide for such additional insured.

B. With respect to the insurance afforded to these additional insureds, the following is added to **Section III —Limits Of Insurance And Retained Limit:**

If coverage provided to the additional insured is required by a contract or agreement, the most we will pay on behalf of the additional insured is the amount of insurance:

1. Required by the contract or agreement; or
2. Available under the applicable Limits of Insurance shown in the Declarations;

whichever is less.
This endorsement shall not increase the applicable Limits of Insurance shown in the Declarations.

Authorized Representative

Lead time is
Stock - 6 weeks

WATER MATERIALS BID LIST 2025-2026

Smyrna

Ferguson Waterworks

WATER	ITEM #	DESCRIPTION	SIZE	ALTERNATE PART #	UNIT	EST. QTY. FY 26/27	BIDDER	UNIT PRICE	ESTIMATED DELIVERY TIME
		METER YOKES/ACCESSORIES							
W	1	METER RETROSETTER W/ 360° LOCKWING & DC; MUELLER (FORD ALTERNATE)	5/8" X 3/4"	RETRO-2CVBRHH-NL	EA	10		$209.26	
W	2	METER RISER; RELOCATOR W/ 360° LOCKWING & DC; MUELLER (FORD ALTERNA	5/8" X 3/4" X 7"	VBHH42-7WR-NL	EA	200		$199.79	
W	3	METER RISER; RELOCATOR W/ 360° LOCKWING & DC; MUELLER (FORD ALTERN	5/8" X 3/4" X 12"	VBHH42-12-NL	EA	10		$203.87	
W	4	METER RISER RELOCATOR W/ 360° LOCKWING & DC; MUELLER (FORD ALTERNA	1" X 10"	VBHH44-10-NL	EA	80		$299.71	
W	5	METER RISER; RELOCATOR W/ 360° LOCKWING & DC; MUELLER (FORD ALTERN	1.5" X 14"	VBRHH46-14-NL	EA	5		$1,557.27	
W	6	METER RISER; RELOCATOR W/ 360° LOCKWING & DC; MUELLER (FORD	2" X 14"	VBRHH47-14-NL	EA	10		$1,625.97	
W	7	METER RISER; RELOCATOR W/360° LOCKWING & DC; FORD W/BYPASS	2" X 14"	n/a	EA	2		$1,713.36	
W	9	METER SWIVEL 2.5L; FORD	5/8" X 3/4" X 3/4"x 2.5" LONG	MUELLER H-10890N	EA	200		$15.00	
W	10	METER SWIVEL COUPLING ; FORD	5/8" x 3/4" x 3/4" x 2.25" LONG	MUELLER H-10890026	EA	5		$15.00	
W	11	METER SWIVEL COUPLING STRAIGHT; FORD	1"	MUELLER H-10890	EA	80		$20.00	
W	12	FLANGE PAK FOR METER - BRASS (BOX W/2)	1.5"	or equal	EA	8		$95.97	
W	13	FLANGE PAK FOR METER - BRASS (BOX W/ 2)	2"	or equal	EA	10		$102.64	
W	14	A-24 METER ADAPTOR; FORD	5/8" x 3/4" to 1"	or equal	EA	120		$31.98	
W	15	A-47 FLANGED METER ADAPTOR; FORD (BOX W/ 2)	1" TO 2"	or equal	EA	5		$190.94	
W	16	A-67 FLANGED METER ADAPTOR; FORD (BOX W/2)	1.5" TO 2"	or equal	EA	5		$273.82	

WATER	ITEM #	DESCRIPTION	SIZE	ALTERNATE PART #	UNIT	EST. QTY. FY 26/27	BIDDER	UNIT PRICE	ESTIMATED DELIVERY TIME
		WATER REGULATORS							
W	17	REGULATOR; WATTS	3/4"		EA	4		$185.74	
W	18	REGULATOR; WATTS	1"		EA	4		$271.07	
W	19	REGULATOR; ZURN WILKINS	3/4"		EA	2		$142.86	

WATER	ITEM #	DESCRIPTION	SIZE	ALTERNATE PART #	UNIT	EST. QTY. FY 26/27	BIDDER	UNIT PRICE	ESTIMATED DELIVERY TIME
		WATER MOUDLE							
W	21	ITRON UNIVERSAL MOUDLE W/ LID MOUNTING KIT	UNIVERSAL	n/a	EA	275			
W	22	ITRON UNIVERSAL LEAK SENSOR	UNIVERSAL	n/a	EA	10			
W	23	CELLULAR 500W MODULE W/ LID MOUNTING KIT	UNIVERSAL	n/a	EA	100			

WATER	ITEM #	DESCRIPTION	SIZE	ALTERNATE PART #	UNIT	EST. QTY. FY 26/27	BIDDER	UNIT PRICE	ESTIMATED DELIVERY TIME
		METERS AND PARTS							
W	24	METER CIB/HRE/USG W/ ITRON CONNECTOR; BADGER	5/8" X 3/4"	n/a	EA	200			
W	25	METER CIB/HRE/USG W/ ITRON CONNECTOR; BADGER	1"	n/a	EA	80			
W	26	METER CIB/HRE/USG W/ ITRON CONNECTOR; BADGER	1.5	n/a	EA	4			
W	27	METER ELLIPTICALW/T. PLUG HRE/USG W/ ITRON CONNECTOR W/ D. P.; BADGE	2"	n/a	EA	6			
W	28	METER BOTTOMS FOR BADGER METER; BADGER	5/8" X 3/4"	n/a	EA	25			
W	29	METER BOTTOMS FOR BADGER METER	1"	n/a	EA	10			
W	37	CHAMBER for M70 BADGER METER	1"	n/a	EA	5			
W	38	CHAMBER for M120 BADGER METER	1.5"	n/a	EA	5			
W	39	CHAMBER forM170 BADGER METER	2"	n/a	EA	5			

WATER MATERIALS BID LIST 2025-2026

W	40	RETROFIT REGISTER w/ ITRON CONNECTOR; BADGER	5/8" X 3/4"	n/a	EA	400			
W	41	RETROFIT REGISTER w/ ITRON CONNECTOR; BADGER	1"	n/a	EA	6			
W	42	RETROFIT REGISTER w/ ITRON CONNECTOR; BADGER	1.5"	n/a	EA	2			
W	43	RETROFIT REGISTER w/ ITRON CONNECTOR; BADGER	2"	n/a	EA	4			
WATER	**ITEM #**	**DESCRIPTION**	**SIZE**	**ALTERNATE PART #**	**UNIT**	**EST. QTY. FY 26/27**	**BIDDER**	**UNIT PRICE**	**ESTIMATED DELIVERY TIME**
		ULTRASONIC METERS AND PARTS							
W	44	NEPTUNE METER W/ 5' ITRON CONNECTOR in 100 USG	2" x 17"		EA	4		$918.00	
W	45	NEPTUNE METER W/ 25' ITRON CONNECTOR in 100 USG W/ FLANGE PAKS	3"X 12"		EA	2		$3,446.30	
W	46	NEPTUNE METER W/ 25' ITRON CONNECTOR in 100 USG W/ FLANGE PAKS	4" X 14"		EA	2		$4,431.49	
W	47	NEPTUNE METER W/ 25' ITRON CONNECTOR in 100 USG W/ FLANGE PAKS	6" X 18"		EA	3		$7,435.02	
WATER	**ITEM #**	**DESCRIPTION**	**SIZE**	**ALTERNATE PART #**	**UNIT**	**EST. QTY. FY 26/27**	**BIDDER**	**UNIT PRICE**	**ESTIMATED DELIVERY TIME**
		METER BOXES AND LIDS							
W	48	SIGMA RMB-132418-SW W/ LC1324T-D READ DOOR AND RECESS TOUCH READ	5/8" x 3/4" meters	OLD CASTLE 1324X18 /DI65-45-12	EA	50		$214.94	
W	49	SIGMA RMB-173018-SW W/ LC1730T-D READ DOOR AND RECESS TOUCH READ	1" - 2" meters	OLD CASTLE 1730X18/DI65-45-12	EA	25		$361.39	
W	50	SIGMA LID ONLY LC1324T-D READ DOOR AND RECESS TOUCH READ HOLE	5/8" x 3/4" meters	D DI 6545-12 W/ READ DOOR /TRANS	EA	10		$120.58	
W	51	SIGMA LID ONLY LC1730T-D READ DOOR AND RECESS TOUCH READ HOLE	1" - 2" meters	ID DI 6545-12 W/ READ DOOR /TRANS	EA	10		$214.29	
W	55	LID ONLY	CI SOLID LID FOR BROOKS 36HI5	n/a	EA	25		N/A	
		TOUCH READ HOLE	Tricast DI w/ read door /trans hole 1324/1730						
WATER	**ITEM #**	**DESCRIPTION**	**SIZE**	**ALTERNATE PART #**	**UNIT**	**EST. QTY. FY 26/27**	**BIDDER**	**UNIT PRICE**	**ESTIMATED DELIVERY TIME**
		VAULTS							
W	56	METER VAULT W/ ALUMINUM LID	2" METER VAULT			2			
WATER	**ITEM #**	**DESCRIPTION**	**SIZE**	**ALTERNATE PART #**	**UNIT**	**EST. QTY. FY 26/27**	**BIDDER**	**UNIT PRICE**	**ESTIMATED DELIVERY TIME**
		BRASS FITTINGS							
W	59	BRASS REDUCTION COUPLING	2" X 1.5"		EA	2		$39.00	
W	60	ROUGH BRASS 45° COUPLING	1.5"		EA	2		$26.57	
W	61	ROUGH BRASS 90° COUPLING	1.5"		EA	2		$33.62	
W	64	FEMALE THREAD BALL VALVE; FORD	3/4"		EA	10		$39.85	
W	65	BRASS TEE	2"x2"x2"		EA	10		$54.00	
W	66	BRASS THREADED 90°; MATCO	2"		EA	10		$38.39	
W	67	BRASS THREADED STREET 90°; MATCO	2"		EA	10		$58.35	
W	68	THREADED COUPLING; MATCO	2"		EA	10		$34.42	
W	69	BRASS ALL-THREAD	1.5"		EA	2		$12.52	
W	70	BRASS NIPPLE	1.5" X 6"		EA	2		$33.31	
W	71	BRASS ALL THREAD; MATCO--NORCA	2"		EA	20		$19.06	
W	72	BRASS NIPPLE; MATCO-NORCA	2" X 6" LONG		EA	10		$42.82	
W	73	BRASS NIPPLE; BMI	2" X 12" LONG		EA	10		$93.58	
W	74	BRASS NIPPLE	2" X 18" LONG		EA	6		$153.00	
W	75	BRASS NIPPLE	2" X 24" LONG		EA	6		$204.00	
W	76	CHECK VALVE; RED & WHITE	1.5"		EA	4		$43.67	
W	77	CHECK VALVE; RED & WHITE	2"		EA	4		$62.62	
W	78	APOLLO BALL VALVE	2"		EA	6		$163.17	

WATER MATERIALS BID LIST 2025-2026

WATER	ITEM #	DESCRIPTION	SIZE	ALTERNATE PART #	UNIT	EST. QTY. FY 26/27	BIDDER	UNIT PRICE	ESTIMATED DELIVERY TIME
		COMPRESSION FITTINGS							
W	82	COUPLING; FMLIP; FORD	FMLIP 3/4" X 3/4" CTS		EA	5		$20.29	
W	83	COUPLING; FORD	3/4" CTS X 3/4" CTS		EA	30		$23.49	
W	84	COUPLING; FORD	3/4" CTS PAK X 3/4" IP MALE		EA	5		$19.28	
W	85	COUPLING; FORD	3/4" CTS PACK X 1" CTS PACK		EA	30		$27.28	
W	86	COUPLING; FMLIP; FORD	FMLIP 1" X 1" CTS		EA	15		$25.29	
W	87	COUPLING; FORD	1" CTS X 1" CTS		EA	25		$26.86	
W	88	COUPLING; FORD	1" CTS X 1" I.P. MALE		EA	6		$22.83	
W	89	COUPLING; FORD	2" CTS X 2" CTS JOINT PK		EA	6		121,32	
W	90	2" CTS X 2" IRON PIPE THREAD; FORD	2" CTS X 2" IRON PIPE THREAD		EA	6		$91.13	
W	91	COUPLING; T'S ; FORD	3/4" X 3/4" X 3/4" CTS		EA	20		$56.82	
W	92	COUPLING; T'S ; FORD	3/4" X 3/4" X 1" CTS		EA	10		$60.53	
W	93	COUPLING; T'S; FORD	1" X 1" X 3/4"		EA	5		$45.93	
W	94	COUPLING; T'S; FORD	1" X 1" X 1" CTS PAK JOINT		EA	5		$60.81	
W	95	BALL VALVE; FORD	3/4"		EA	20		$55.37	
W	96	BALL VALVE; FORD	1"		EA	20		$110.96	
W	97	COUPLING; "Y"; FORD	3/4" X 3/4" X 1" CTS		EA	25		$48.59	
W	98	90° COUPLING; FORD	3/4"		EA	5		$30.34	
W	99	90° COUPLING; FORD	1"		EA	5		$38.97	
W	100	Q -NUT ASSEMBLY	3/4"		EA	20		$8.69	
W	101	Q-NUT ASSEMBLY	1"		EA	20		$10.66	
W	102	FEMALE COPPER THREAD GRIP JOINT; FORD	3/4" X 3/4" CTS		EA	5		$21.93	
W	103	FEMALE COPPER THREAD GRIP JOINT; FORD	1" X 1" CTS		EA	5		$32.24	
W	104	PAK J ASSEMBLY; FORD	1" FEMALE X 3/4" CTS		EA	5		$20.01	
W	105	COUPLING SWIVEL 45 DEGREE; FORD	3/4"X3/4"		EA	5		$34.63	
W	106	COUPLING SWIVEL 45 DEGREE; FORD	1"X1"		EA	5		$49.20	
W	107	COUPLING SWIVEL 90 DEGREE; FORD	3/4"X3/4"		EA	5		$38.67	
W	108	COUPLING SWIVEL 90 DEGREE; FORD	1"X1"		EA	5		$52.74	
W	109	MULTI SERVICE Y NL 1-2" FMLIP X 4-1" FMLIP	2"X1"		EA	5		$94.76	
WATER	ITEM #	DESCRIPTION	SIZE	ALTERNATE PART #	UNIT	EST. QTY. FY 26/27	BIDDER	UNIT PRICE	ESTIMATED DELIVERY TIME
		CURB STOPS							
W	113	CURB STOP W/360 DEGREE LOCKING WINGNUT; FORD	3/4"		EA	200		$59.25	
W	114	CURB STOP W/360 DEGREE LOCKING WINGNUT; FORD	1"		EA	25		$107.98	
W	115	BALL VALVE PAD WING/CURB STOP; FORD	1.5"		EA	4		$221.40	
W	116	BALL VALVE PAD WING/CURB STOP; FORD	2"		EA	4		$353.04	
W	117	BALL VALVE PAD WING W/COMPRESSION FITTING; FORD	2"		EA	6		$397.04	
WATER	ITEM #	DESCRIPTION	SIZE	ALTERNATE PART #	UNIT	EST. QTY. FY 26/27	BIDDER	UNIT PRICE	ESTIMATED DELIVERY TIME
		CORP STOPS							
W	122	CORPORATION STOP; FORD	3/4" TAPER X 3/4" CTS		EA	10		$62.23	
W	123	CORPORATION STOP; FORD	1" CC TAPER x 1"CTS		EA	20		$81.81	
W	124	CORPORATION STOP, IRON PIPE THREADS; FORD	1" IP THREAD X1" CTS		EA	5		$81.81	

WATER MATERIALS BID LIST 2025-2026

WATER	ITEM #	DESCRIPTION	SIZE	ALTERNATE PART #	UNIT	EST. QTY. FY 26/27	BIDDER	UNIT PRICE	ESTIMATED DELIVERY TIME
		TAPPING SADDLES							
W	143	TAPPING SADDLE; SMITH BLAIR	2" X 3/4" (2.35-2.56)		EA	5		$29.51	
W	144	TAPPING SADDLE; SMITH BLAIR	2" X 1" (2.35-2.56)		EA	4		$29.51	
W	145	TAPPING SADDLE; SMITH BLAIR	2-1/4" X 3/4" (2.44-2.91)		EA	5		$52.62	
W	146	TAPPING SADDLE; SMITH BLAIR	2-1/4" X 1" (2.44-2.91)		EA	5		$52.62	
W	149	TAPPING SADDLE; SMITH BLAIR	4" X 3/4" (4.40-4.80)		EA	4		$29.45	
W	151	TAPPING SADDLE; SMITH BLAIR	4" X 1" (4.40-4.80)		EA	4		$29.45	
W	155	TAPPING SADDLE; SMITH BLAIR	4" X 2" (4.40-4.80)		EA	4		$36.89	
W	158	TAPPING SADDLE; SMITH BLAIR	6" X 3/4" (6.84-7.60)		EA	5		$34.65	
W	160	TAPPING SADDLE ; SMITH BLAIR	6" X 1" (5.94-6.90)		EA	5		$34.11	
W	161	TAPPING SADDLE; SMITH BLAIR	6" X 1" (6.84-7.60)		EA	5		$34.65	
W	163	TAPPING SADDLE; SMITH BLAIR	6" X 2" (5.94-6.90)		EA	5		$40.07	
W	165	TAPPING SADDLE ; SMITH BLAIR	6"x2" (6.84-7.60)		EA	5		$40.60	
W	166	TAPPING SADDLE ; SMITH BLAIR	8" X 3/4" (8.54-10.10)		EA	5		$41.14	
W	167	TAPPING SADDLE; SMITH BLAIR	8" X 1" (8.54-10.10)		EA	4		$41.14	
W	171	TAPPING SADDLE; SMITH BLAIR	8" X 2" (8.54-10.10)		EA	2		$48.88	
W	175	TAPPING SADDLE; SMITH BLAIR	10" X 2" (10.64-12.12)		EA	4		$54.91	
W	176	TAPPING SADDLE; SMITH BLAIR	12" X 3/4" (12.64-14.32)		EA	2		$51.99	
W	178	TAPPING SADDLE; SMITH BLAIR	12" X 1" (12.62-14.32)		EA	2		$51.99	
W	180	TAPPING SADDLE; SMITH BLAIR	12"-14"X 2" (12.62-14.32)		EA	2		$65.52	
W	181	TAPPING SADDLE; SMITH BLAIR	16"- X 2" (17.25-17.80)		EA	2		$142.22	
W	182	TAPPING SADDLE; SMITH BLAIR	16"- X 2" (17.25-17.80)		EA	2		$185.51	
W	183	TAPPING SADDLE:SMITH BLAIR	20"X2" (21.55-21.65)		EA	2		$215.66	
W	184	TAPPING SADDLE; SMITH BLAIR	24" X 2" (25.75-25.85)		EA	2		$245.48	
WATER	ITEM #	DESCRIPTION	SIZE	ALTERNATE PART #	UNIT	EST. QTY. FY 26/27	BIDDER	UNIT PRICE	ESTIMATED DELIVERY TIME
		REPAIR CLAMPS							
W	188	REPAIR CLAMP; SMITH BLAIR	3/4" X 6" FL CIR		EA	2		$40.93	
W	189	REPAIR CLAMP; SMITH BLAIR	1" X 6" FL CIR (PVC)		EA	2		$40.93	
W	190	REPAIR CLAMP; SMITH BLAIR	1-1/4" X 6"		EA	4		$17.98	
W	191	REPAIR CLAMP; SMITH BLAIR	1.5" X 6" FL CIR (PVC)		EA	4		$42.24	
W	192	REPAIR CLAMP; SMITH BLAIR	2" X 7" FL CIR (2.35-2.63)		EA	8		$45.22	
W	193	REPAIR CLAMP; SMITH BLAIR	2.5" X 7" FL CIR (2.70-3.00)		EA	6		$46.31	
W	194	REPAIR CLAMP; SMITH BLAIR	2" X 12.5" FL CIR (2.35-2.63)		EA	2		$75.89	
W	195	REPAIR CLAMP; SMITH BLAIR	2.5" X 12" FL CIR (2.70-3.00)		EA	2		$79.73	
W	196	REPAIR CLAMP; SMITH BLAIR	2" X 15" (2.35-2.63)		EA	2		$87.55	
W	197	REPAIR CLAMP; SMITH BLAIR	2" X 25" (2.35-2.63)		EA	2		$156.33	
W	198	REPAIR CLAMP; SMITH BLAIR	2.25" X 25" (2.70-3.00)		EA	2		$167.79	
W	199	REPAIR CLAMP; SMITH BLAIR	3" X 7.5" FL CIR (3.73-4.00)		EA	2		$51.89	
W	200	REPAIR CLAMP; SMITH BLAIR	3" X 12" FL CIR (3.46-3.70)		EA	2		$84.06	
W	201	REPAIR CLAMP; SMITH BLAIR	4" X 7.5" FL CIR (3.96-4.25)		EA	2		$53.75	
W	202	REPAIR CLAMP; SMITH BLAIR	4" X 7.5" FL CIR (4.45-4.73)		EA	2		$55.65	
W	203	REPAIR CLAMP; SMITH BLAIR	4" X 7.5" FL CIR (4.74-5.14)		EA	6		$57.60	
W	204	REPAIR CLAMP; SMITH BLAIR	4 X 12.5" FL CIR (4.74-5.14)		EA	2		$94.39	
W	205	REPAIR CLAMP; SMITH BLAIR	4 X 15" FL CIR (PVC) (4.74-5.14)		EA	2		$113.87	
W	207	REPAIR CLAMP; SMITH BLAIR	6" X 7" FL CIR (6.84-7.24)		EA	10		$67.98	
W	208	REPAIR CLAMP; SMITH BLAIR	6" X 7.5" FL CIR (6.56-6.96)		EA	4		$66.51	

WATER MATERIALS BID LIST 2025-2026

W	210	REPAIR CLAMP; SMITH BLAIR	6" X 12" FL CIR (6.56-6.96)		EA	2		$107.15	
W	211	REPAIR CLAMP; SMITH BLAIR	6" X 12" FL CIR (6.84-7.24)		EA	4		$107.15	
W	212	REPAIR CLAMP; SMITH BLAIR	6" X 12.5" (7.05-7.45)		EA	2		$110.51	
W	213	REPAIR CLAMP; SMITH BLAIR	6" X 15" FL CIR (6.56-6.96)		EA	2		$120.59	
W	214	REPAIR CLAMP; SMITH BLAIR	6" X 15" (6.84-7.24)		EA	2		$127.99	
W	215	REPAIR CLAMP; SMITH BLAIR	6" X 15" (7.05-7.45)		EA	2		$127.99	
W	217	REPAIR CLAMP; SMITH BLAIR	8" X 7" FL CIR (8.54-8.94)		EA	4		$78.81	
W	218	REPAIR CLAMP; SMITH BLAIR	8" X 7" FL CIR (8.99-9.39)		EA	8		$81.32	
W	219	REPAIR CLAMP; SMITH BLAIR	8" X 12" FL CIR (8.99-9.39, DIP)		EA	2		$130.21	
W	220	REPAIR CLAMP; SMITH BLAIR	8" X 15" (8.54-8.94)		EA	2		$150.69	
W	221	REPAIR CLAMP; SMITH BLAIR	8" X 15" (8.99-9.39)		EA	2		$155.26	
W	222	REPAIR CLAMP; SMITH BLAIR	10" X 15" FL CIR (DIP) (11.04-11.44)		EA	2		$193.75	
W	223	REPAIR CLAMP; SMITH BLAIR	10" X 20" (11.04-11.44)		EA	2		$268.54	
W	224	REPAIR CLAMP; SMITH BLAIR	12" X 7" FL CIR (13.10-13.50)		EA	2		$111.64	
W	225	REPAIR CLAMP; SMITH BLAIR	12" X 12" FL CIR (DIP) (13.10-13.50)		EA	2		$179.67	
W	226	REPAIR CLAMP; SMITH BLAIR	12' X 15' FL CIR (DIP) (13.10 - 13.50)		EA	2		$223.26	
W	227	REPAIR CLAMP; SMITH BLAIR	16" X 15" (17.15-17.90)		EA	2		$463.46	
W	229	REPAIR CLAMP; SMITH BLAIR	16" X 20" FL CIR (17.15-17.90)		EA	2		$639.41	
W	230	REPAIR CLAMP; SMITH BLAIR	16" X 30" (17.15-17.90)		EA	2		$951.45	
W	231	REPAIR CLAMP; SMITH BLAIR	18" X 20" FL CIR (19.23-19.98)		EA	2		$663.00	
W	232	REPAIR CLAMP; SMITH BLAIR	20" X 20" (21.52-22.27)		EA	2		$701.82	
W	233	REPAIR CLAMP; SMITH BLAIR	24" X 30" FL CIR (25.70-26.80)		EA	2		$1,816.47	
W	234	REPAIR CLAMP; SMITH BLAIR	24" X 20" FL CIR (25.70-26.80)		EA	2		$1,201.66	
W	237	REPAIR CLAMP; SMITH BLAIR W/1" CC TAP	6"X7.5" W/1" TAP (6.84-7.24)		EA	2		$95.49	
W	238	REPAIR CLAMP; SMITH BLAIR W/1" CC TAP	8"X7.5" W/ 1" TAP (8.99-9.39)					$108.85	
WATER	**ITEM #**	**DESCRIPTION**	**SIZE**	**ALTERNATE PART #**	**UNIT**	**EST. QTY. FY 26/27**	**BIDDER**	**UNIT PRICE**	**ESTIMATED DELIVERY TIME**
		HYMAX							
W	240	HYMAX; KRAUSZ	1.5" (1.61-2.13)		EA	4		331.16	
W	241	HYMAX; KRAUSZ	2" (2.10-3.03)		EA	4		349.16	
W	242	HYMAX; KRAUSZ	3" (3.46-4.33)		EA	4		$460.60	
W	243	HYMAX; KRAUSZ	4" (4.25-5.63)		EA	4		$590.21	
W	244	HYMAX; KRAUSZ	6" (6.42-7.68)		EA	10		$781.66	
W	245	HYMAX; KRAUSZ	8" (8.54-9.84)		EA	10		$882.52	
W	246	HYMAX; KRAUSZ	10" (10.70 - 12.00)		EA	2		$1,135.29	
W	247	HYMAX; KRAUSZ	12" (12.40-13.66)		EA	2		$1,340.02	
WATER	**ITEM #**	**DESCRIPTION**	**SIZE**	**ALTERNATE PART #**	**UNIT**	**EST. QTY. FY 26/27**	**BIDDER**	**UNIT PRICE**	**ESTIMATED DELIVERY TIME**
		PIPE							
W	254	PEX PIPE; REHAU 300 ft. Roll	3/4"	n/a	FT	2000		.88 PER FOOT	
W	255	PEX PIPE; REHAU 300 ft. roll	1"	n/a	FT	4000		1.32 PER FOOT	
W	256	PEX PIPE; REHAU 300 ft. roll	2"	n/a	FT	300		8.00 PER FOOT	
W	258	CL-350 DUCTILE IRON WATER PIPE W/ BITUMINOUS SEAL COATING INSIDE & O	3"	n/a	FT	60			
W	263	CL-350 DUCTILE IRON WATER PIPE W/ BITUMINOUS SEAL COATING INSIDE & O	12"	n/a	FT	40		55.61 PER FOOT	
W	264	CL-350 DUCTILE IRON WATER PIPE W/ BITUMINOUS SEAL COATING INSIDE & O	16"	n/a	FT	40		90.00 PER FOOT	
W	265	CL-350 DUCTILE IRON WATER PIPE W/ BITUMINOUS SEAL COATING INSIDE & O	18"	n/a	FT	40		106.14 PER FOOT	
W	266	CL-350 DUCTILE IRON WATER PIPE W/ BITUMINOUS SEAL COATING INSIDE & O	24"	n/a	FT	40		168.54 PER FOOT	
W	267	CL-350 DUCTILE IRON WATER PIPE W/ BITUMINOUS SEAL COATING INSIDE & O	36"	n/a	FT	40		391.44 PER FOOT	

WATER MATERIALS BID LIST 2025-2026

W	268	C900 WATER PIPE SDR 14	4"		FT	100		6.45 PER FOOT	
W	269	C900 WATER PIPE SDR 14	6"		FT	200		12.91 PER FOOT	
W	270	C900 WATER PIPE SDR 14	8"		FT	200		22.24 PER FOOT	
W	271	C900 WATER PIPE SDR 14	10"		FT	40		33.64 PER FOOT	
W	273	SDR 11, 2" IPS BLACK WATER PIPE	2"		FT	100		**N/A**	
WATER	**ITEM #**	**DESCRIPTION**	**SIZE**	**ALTERNATE PART #**	**UNIT**	**EST. QTY. FY 26/27**	**BIDDER**	**UNIT PRICE**	**ESTIMATED DELIVERY TIME**
		PIPE FITTINGS							
W	277	PIPE STIFFENER (PLASTIC)	3/4"		EA	1000		$0.53	
W	278	PIPE STIFFENER (PLASTIC)	1"		EA	2000		$0.60	
W	279	PIPE INSERT; FORD # 55 STAINLESS STELL	2"		EA	14		$3.95	
W	293	CAP; TYLER	2"		EA	2		N/A	
W	294	CAP; TYLER	3"		EA	2		$38.57	
W	295	CAP; TYLER	4"		EA	2		$39.97	
W	296	CAP; TYLER	4" X 2"		EA	2		$82.03	
W	297	CAP; TYLER	6"		EA	2		$93.69	
W	298	CAP; TYLER	6" X 2"		EA	2		$112.18	
W	299	CAP; TYLER	8"		EA	2		$114.28	
W	300	CAP; TYLER	8" X 2"		EA	2		$155.66	
W	345	ANCHOR COUPLING; TYLER	6" X 13" LONG		EA	6		$278.36	
W	346	ANCHOR COUPLING; TYLER	6" X 18" LONG		EA	6		$307.11	
W	347	ANCHOR COUPLING; TYLER	6" X 24" LONG		EA	6		$414.39	
WATER	**ITEM #**	**DESCRIPTION**	**SIZE**	**ALTERNATE PART #**	**UNIT**	**EST. QTY. FY 26/27**	**BIDDER**	**UNIT PRICE**	**ESTIMATED DELIVERY TIME**
		ACCESSORIES							
W	389	M.J. ACC KIT; UFCO	3"	Offering Own Brand (Proselect)	EA	4		$13.78	
W	390	M.J. ACC KIT; SIGMA	4"	Offering Own Brand (Proselect)	EA	5		$18.50	
W	391	M.J. BOLT PACK SET	6"	Offering Own Brand (Proselect)	EA	10		$26.18	
W	392	M.J. BOLT PACK SET	8"	Offering Own Brand (Proselect)	EA	4		$26.95	
W	393	M.J. ACC KIT; SIGMA	10"	Offering Own Brand (Proselect)	EA	2		$39.31	
W	394	M.J. ACC KIT	12"	Offering Own Brand (Proselect)	EA	4		$39.34	
W	395	M.J. ACC KIT	16"	Offering Own Brand (Proselect)	EA	4		$60.44	
W	397	TRANSITION GASKET	4"	Offering Own Brand (Proselect)	EA	4		$10.98	
W	398	TRANSITION GASKET	6"	Offering Own Brand (Proselect)	EA	8		$16.13	
W	399	TRANSITION GASKET	8"	Offering Own Brand (Proselect)	EA	6		$26.94	
W	400	MEGALUG D. I.; FORD	3"	Quoting Sigma	EA	4		$48.79	
W	401	MEGALUG AND ACC KIT (D I); SIGMA	4"	Quoting Sigma	EA	4		$52.86	
W	402	MEGALUG AND ACC KIT (D I); SIGMA	6"	Quoting Sigma	EA	4		$65.57	
W	403	MEGALUG AND ACC KIT (D I); EBAA	8"	Quoting Sigma	EA	2		$89.46	
W	404	MEGALUG AND ACC KIT (D I); EBAA	10"	Quoting Sigma	EA	2		$126.56	
W	405	MEGALUG AND ACC KIT (D I); FORD	12"	Quoting Sigma	EA	2		$170.27	
W	406	MEGALUG AND ACC KIT (D I)	16"	Quoting Sigma	EA	4		$305.48	
W	407	MEGALUG AND ACC KIT (D I)	24"	Quoting Sigma	EA	2		$682.61	
W	408	MEGALUG AND ACC KIT (D.I.)	36"	Quoting Sigma	EA	2		$1,814.60	
W	412	MEGALUG AND ACC KIT (C900); SIGMA	4"	Quoting Sigma	EA	10		$60.99	
W	413	MEGALUG AND ACC KIT (C900); SIGMA	6"	Quoting Sigma	EA	40		$76.24	
W	414	MEGALUG AND ACC KIT (C900); SIGMA	8"	Quoting Sigma	EA	30		$102.67	
W	415	C900 MEGALUG; EBAA	10"	Quoting Sigma	EA	6		$178.91	

WATER MATERIALS BID LIST 2025-2026

W	416	C900 MEGALUG; SIGMA	12"	Quoting Sigma	EA	6		$187.56	
W	417	MEGALUG AND ACC KIT ((DI)	18"	Quoting Sigma	EA	4		$440.99	
W	418	MEGALUG AND ACC KIT (D I)	20"	Quoting Sigma	EA	4		$539.89	
WATER	**ITEM #**	**DESCRIPTION**	**SIZE**	**ALTERNATE PART #**	**UNIT**	**EST. QTY. FY 26/27**	**BIDDER**	**UNIT PRICE**	**ESTIMATED DELIVERY TIME**
		VALVES							
W	423	GATE VALVE - THREADED; KENNEDY	2"	American Flow Control -	EA	10		$487.46	
W	424	GATE VALVE; KENNEDY	3"	American Flow Control -	EA	2		$715.08	
W	425	GATE VALVE' M&H	4"	American Flow Control -	EA	2		$798.75	
W	426	GATE VALVE; M&H	6"	American Flow Control -	EA	5		$1,019.61	
W	427	TAPPING VALVE; MUELLER	6"	American Flow Control -	EA	2		$1,421.84	
W	428	GATE VALVE; MUELLER	8"	American Flow Control -	EA	5		$1,622.43	
W	429	GATE VALVE	10"	American Flow Control -	EA	1		$2,529.27	
W	430	GATE VALVE; M&H	12"	American Flow Control -	EA	1		$3,200.00	
W	431	GATE VALVE; MUELLER	16"	American Flow Control -	EA	1		$10,343.09	
WATER	**ITEM #**	**DESCRIPTION**	**SIZE**	**ALTERNATE PART #**	**UNIT**	**EST. QTY. FY 26/27**	**BIDDER**	**UNIT PRICE**	**ESTIMATED DELIVERY TIME**
		VALVE BOXES/RISERS							
W	436	SQUARE VALVE BOX CASTING & LID			EA	15		215.91	
W	437	SQUARE STEEL VALVE BOX RISER	1.5"		EA	5		136.36	
W	438	CONCRETE VALVE BOX RISER	2"		EA	15		$18.13	
W	439	CONCRETE VALVE BOX RISER	4"		EA	15		$21.53	
W	440	CONCRETE VALVE BOX RISER	6"		EA	15		$34.96	
W	441	CONCRETE VALVE BOX RISER	12"		EA	10		$49.43	
W	442	CONCRETE VALVE BOX RISER	18"		EA	10		$51.84	
W	500	VALVE BOX EXTENSION; SIGMA	1"	g Own Brand (Proselect) Part# IVB	EA	25		$21.71	
W	501	VALVE BOX EXTENSION; SIGMA	1.5"	ng Own Brand (Proselect) Part# IVE	EA	25		$28.29	
W	502	VALVE BOX EXTENSION; SIGMA	2"	ng Own Brand (Proselect) Part# IVE	EA	30		$33.94	
W	503	VALVE BOX EXTENSION; SIGMA	3"	g Own Brand (Proselect) Part# IVB	EA	25		$33.57	
W	504	VALVE BOX EXTENSION; SIGMA	4"	ng Own Brand (Proselect) Part# IVE	EA	25		$33.86	
W	505	VALVE BOX EXTENSION; SIGMA	6"	g Own Brand (Proselect) Part# IVB	EA	25		$48.34	
		HIGHLIGHTED PORTION IS ALSO ON THE GAS BID (G-232-237)	***PLEASE ALSO BID ON GAS (G-232-237) AS WELL***						
WATER	**ITEM #**	**DESCRIPTION**	**SIZE**	**ALTERNATE PART #**	**UNIT**	**EST. QTY. FY 26/27**	**BIDDER**	**UNIT PRICE**	**ESTIMATED DELIVERY TIME**
		HYDRANTS							
W	448	BLOW OFF-ABOVE GROUND; KUPFERLE	2" STRAIGHT BURY		EA	8		**961.29**	
W	449	BLOW OFF-BELOW GROUND; KUPFERLE	2" STRAIGHT BURY		EA	5		$921.13	
W	450	POST HYDRANT,	3' BURY, 3" MJ SHOE, 2-1/2" OUTLET		EA	2			
W	451	FIRE HYDRANT ASSEMBLY; M&H YELLOW	5 1/4" 3' 6"bury		EA	6			
W	452	HYDRANT TRAFFIC REPAIR KIT ; MUELLER	5 1/4"		EA	5			
W	453	HYDRANT TRAFFIC REPAIR KIT ; AMERICAN	5 1/4"		EA	1		$488.08	
W	454	HYDRANT TRAFFIC REPAIR KIT ; M&H	5 1/4"		EA	5			
W	458	MUELLER EXTENSION KIT	5 1/4" X 6"		EA	1			
W	459	MUELLER EXTENSION KIT	5 1/4" X 12"		EA	1			
W	460	MUELLER EXTENSION KIT	5 1/4" X 18"		EA	1			

WATER MATERIALS BID LIST 2025-2026

WATER	ITEM #	DESCRIPTION	SIZE	ALTERNATE PART #	UNIT	EST. QTY. FY 26/27	BIDDER	UNIT PRICE	ESTIMATED DELIVERY TIME
W	461	MUELLER EXTENSION KIT	5 1/4" X 24"		EA	1			
W	462	M&H EXTENSION KIT	5 1/4" X 6"		EA	1			
W	463	M&H EXTENSION KIT	5 1/4" X 12"		EA	1			
W	464	M&H EXTENSION KIT	5 1/4" X 18"		EA	1			
W	465	M&H EXTENSION KIT	5 1/4" X 24"		EA	1			
		INSERT VALVE & SLEEVES							
W	480	INSERT VALVE & SLEEVE W/ INSTALLATION	6"	ROMAC	EA	1		$9,139.78	
W	481	INSERT VALVE & SLEEVE W/ INSTALLATION	8"	ROMAC	EA	1		$10,215.05	
W	482	INSERT VALVE & SLEEVE W/ INSTALLATION	10"	ROMAC	EA	1		$15,161.29	
W	483	INSERT VALVE &SLEEVE W/ INSTALLATION	12"	ROMAC	EA	1		$17,204.30	
W	484	INSERT VALVE & SLEEVE W/ INSTALLATION	16"		EA	1		$43,548.39	

AMERICAN Flow Control Submittal Information

4" - 12" SERIES 2500-1 RESILIENT WEDGE GATE VALVE, NRS

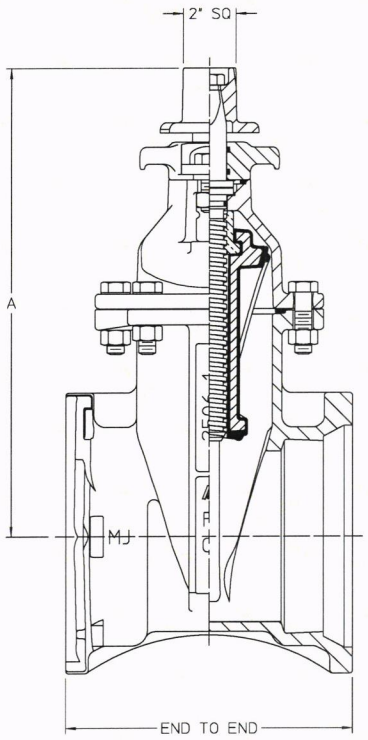

SHOWN WITH 2" OPERATING NUT

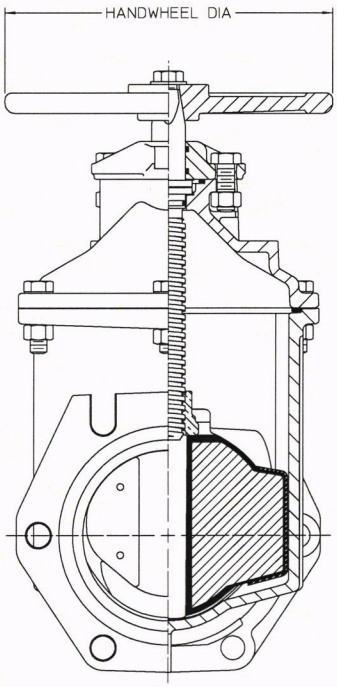

SK20041101-1

SHOWN WITH OPTIONAL HANDWHEEL

DIMENSION	VALVE SIZE				
	4"	6"	8"	10"	12"
End to End - MJ/MJ	10.00	10.50	11.50	12.50	13.50
End to End - FL/FL	9.00	10.50	11.50	13.00	14.00
End to End - TY/TY	13.00	15.88	17.50	18.75	19.75
End to End - FL/MJ	9.50	10.50	12.38	13.62	14.38
End to End - FL/TY	11.00	13.19	14.50	15.88	16.88
End to End - PVC/ PVC	13.00	15.88	17.50	-	-
A	13.91	17.12	20.47	24.06	27.59
B	2.50	2.50	2.50	2.50	2.50
C	4.00	5.22	5.50	-	-
D	4.00	5.22	5.50	5.62	5.62
E	9.00	11.19	13.50	15.88	18.00
F DIA	1.00	1.00	1.00	1.31	1.31
Handwheel Diameter	10.00	12.00	14.00	16.00	16.00
No. of Turns to Open	14	20	26	32	38

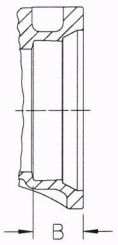

MECHANICAL JOINT (MJ)

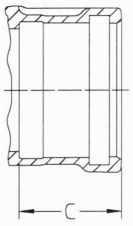

PVC
(NOT AVAILABLE FOR UL/FM)

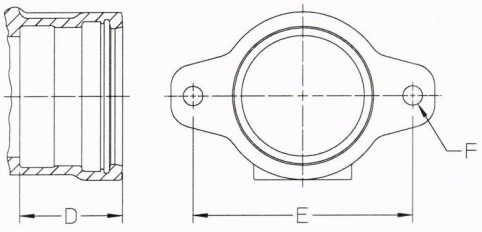

TYTON® (TY)

TYTON® is a registered trademark of United States Pipe and Foundry Co., LLC.

OPTIONAL END CONNECTIONS

AMERICAN
FLOW CONTROL
THE RIGHT WAY

AMERICAN Flow Control
P.O. Box 2727
Birmingham, Al. 35202-2727
Phone: 1-800-326-8051
Fax: 1-800-610-3569
E-mail: afcsales@american-usa.com

Waterous Company
125 Hardman Avenue South
South St. Paul, Mn. 55075-1191
Phone: 1-888-266-3686
Fax: 1-800-601-2809
E-mail: afcsales@american-usa.com

WWW.AMERICAN-USA.COM

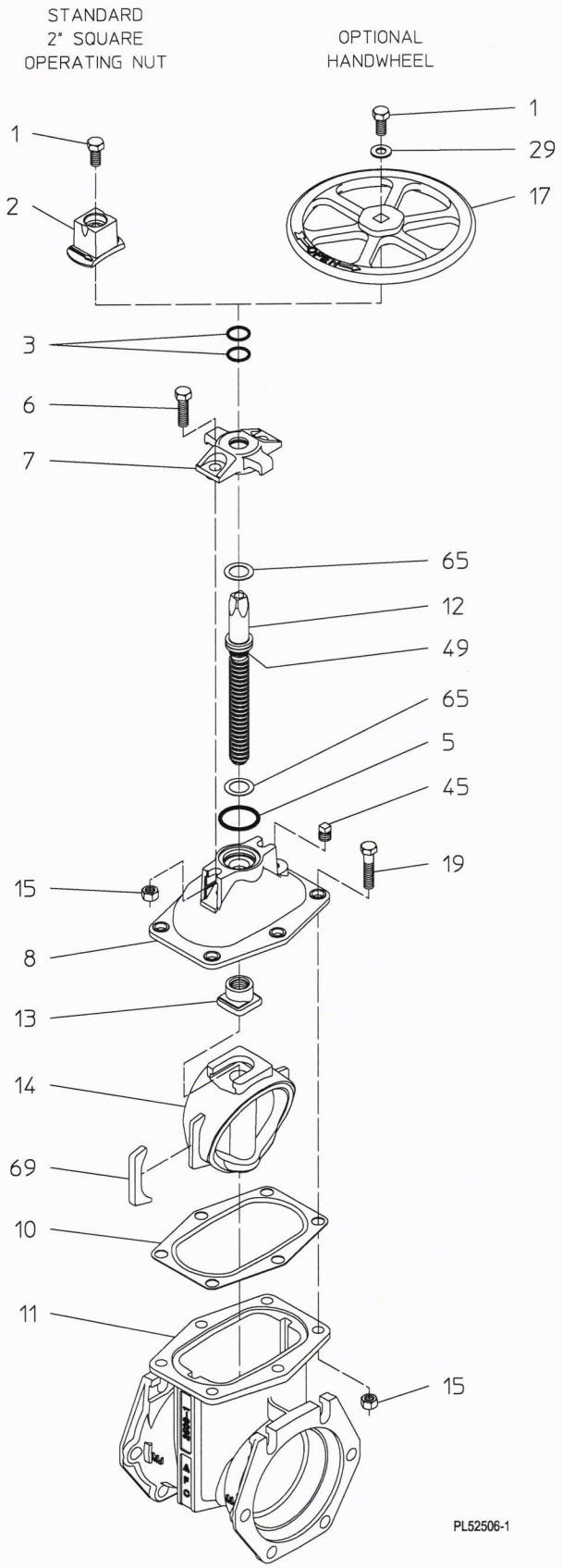

Construction shown is typical of the 6-inch size with mechanical joint end connections and is illustrative only. Construction of other sizes and end connection types vary slightly. See elsewhere on this submittal for specific details.

REF NO.	DESCRIPTION	MATERIAL
1	Hex Head Bolt, 5/8-11 x 1"	304 Stainless Steel
2	Operating Nut, 2" Square	Ductile Iron, ASTM A536
3	O-Ring	Rubber
5	Stuffing Box Gasket	Rubber O-ring
6	Hex Head Bolt, 5/8-11 x 1-3/4"	304 Stainless Steel
7	Stuffing Box	Ductile Iron, ASTM A536
8	Bonnet	Ductile Iron, ASTM A536
10	Bonnet Gasket	Rubber
11	Body	Ductile Iron, ASTM A536
12	Stem	Manganese Bronze, ASTM B763, UNS C86700
13	Wedge Nut	Manganese Bronze, ASTM B763, UNS C86700
14	Resilient Wedge	EPDM Rubber Encapsulated Ductile Iron ASTM A536
15	Hex Nut, 5/8-11	304 Stainless Steel
17	Handwheel	Ductile Iron, ASTM A536
19	Hex Head Bolt, 5/8-11 x 2-1/4"	304 Stainless Steel
29	Flat Washer, 5/8	304 Stainless Steel
49	O-Ring	Rubber
65	Thrust Washer	304 Stainless Steel
69	Wedge Cover	Acetal Polymer

OPTIONAL MATERIALS ARE AS FOLLOWS

BOLTS and NUTS: 316 Stainless Steel
STEM: Cast NDZ-S Bronze, ASTM B763, UNS C99500
STEM: Stainless Steel
WEDGE NUT: Silicon Bronze, ASTM B584, UNS C87600

Open Direction: ☐ Left (C.C.W.) ☐ Right (C.W.)

NOTES:

1. Available in configurations that are UL Listed and FM Approved with 250 psig rated working pressure.
2. Meets requirements of ANSI/AWWA C515 with 250 psig rated working pressure.
3. Fusion-bonded epoxy-coated in accordance with ANSI/AWWA C550.
4. Certified to NSF/ANSI 61 & 372.

AMERICAN
FLOW CONTROL
THE RIGHT WAY

AMERICAN Flow Control
P.O. Box 2727
Birmingham, Al. 35202-2727
Phone: 1-800-326-8051
Fax: 1-800-610-3569
E-mail: afcsales@american-usa.com

Waterous Company
125 Hardman Avenue South
South St. Paul, Mn. 55075-1191
Phone: 1-888-266-3686
Fax: 1-800-601-2809
E-mail: afcsales@american-usa.com

WWW.AMERICAN-USA.COM

PROSELECT™

Product Specifications

5-1/4" VALVE BOX RISER

Product Features

All valve boxes and related parts shall be coated on all surfaces with an asphaltic varnish of 2mm in thickness. For 4" through 12" valves.

Model Numbers

		Riser Size	Drawing No
IVBR514G	5-1/4" x 1" VLV BX RSR	1	1
IVBR514J	5-1/4" x 1-1/2" VLV BX RSR	1-1/2	2
IVBR514K	5-1/4" x 2" VLV BX RSR	2	3
IVBR514M	5-1/4" x 3" VLV BX RSR	3	4
IVBR514P	5-1/4" x 4" VLV BX RSR	4	5
IVBR514U	5-1/4" x 6" VLV BX RSR	6	6

Drawing 1

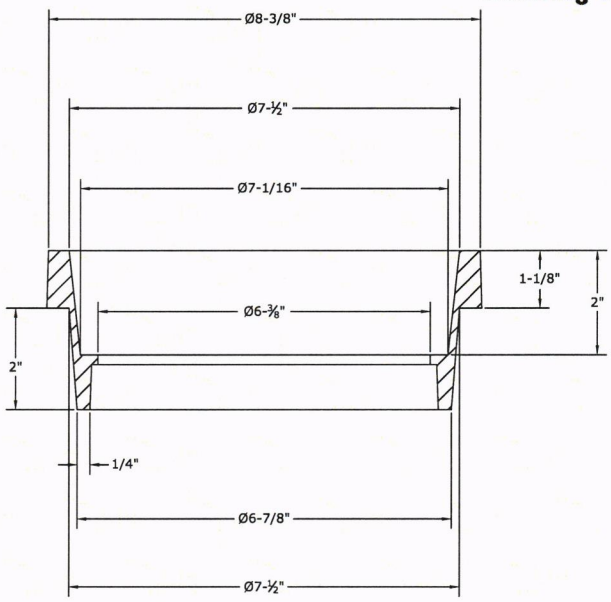

Drawing 2

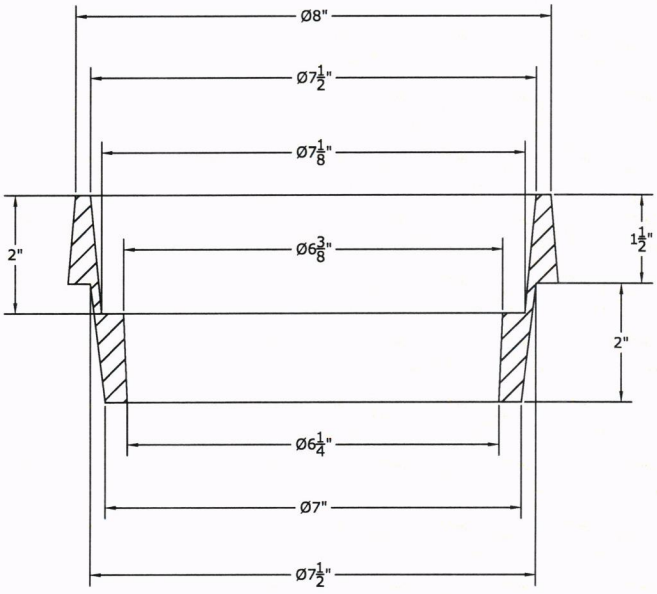

Drawing 3

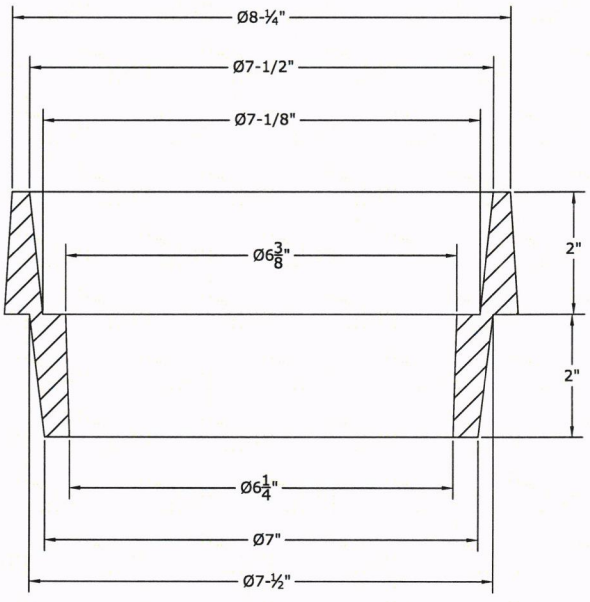

Codes & Approvals

Valve boxes conform to ASTM A-48, Grade 30B; Asphaltic varnish conforms to AWWA C-104.

©2017 Ferguson Enterprises, Inc. All Rights Reserved 0517 478259

PROSELECT™

Product Specifications

5-1/4" VALVE BOX RISER (page 2)

Model Numbers

		Riser Size	Drawing No
IVBR514G	5-1/4" x 1" VLV BX RSR	1	1
IVBR514J	5-1/4" x 1-1/2" VLV BX RSR	1-1/2	2
IVBR514K	5-1/4" x 2" VLV BX RSR	2	3
IVBR514M	5-1/4" x 3" VLV BX RSR	3	4
IVBR514P	5-1/4" x 4" VLV BX RSR	4	5
IVBR514U	5-1/4" x 6" VLV BX RSR	6	6

Drawing 4

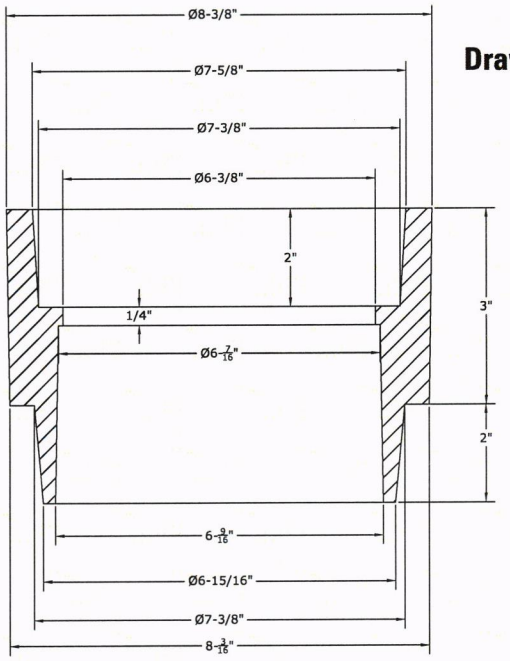

Drawing 5

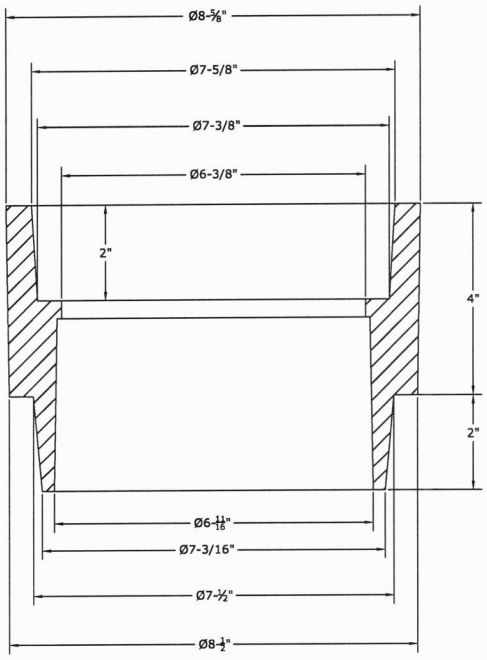

Drawing 6

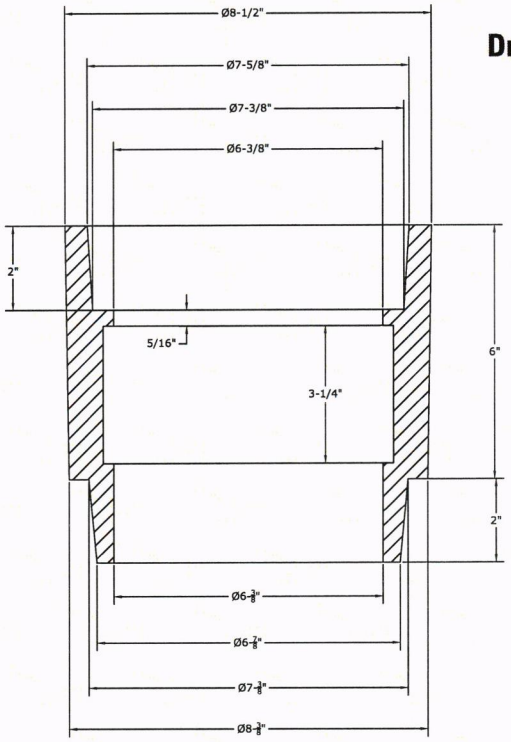

Codes & Approvals

Valve boxes conform to ASTM A-48, Grade 30B; Asphaltic varnish conforms to AWWA C-104.

©2017 Ferguson Enterprises, Inc. All Rights Reserved 0517 478259

PROSELECT®

Mechanical Joint Bolt & Gasket Packs

IMJBGP

Product Features

- Gaskets: SBR in accordance with ANSI/AWWA C111/A21.11
- T Bolts/Nuts: High-strength low-alloy steel manufactured in accordance with ANSI/AWWA C111/A21.11-00

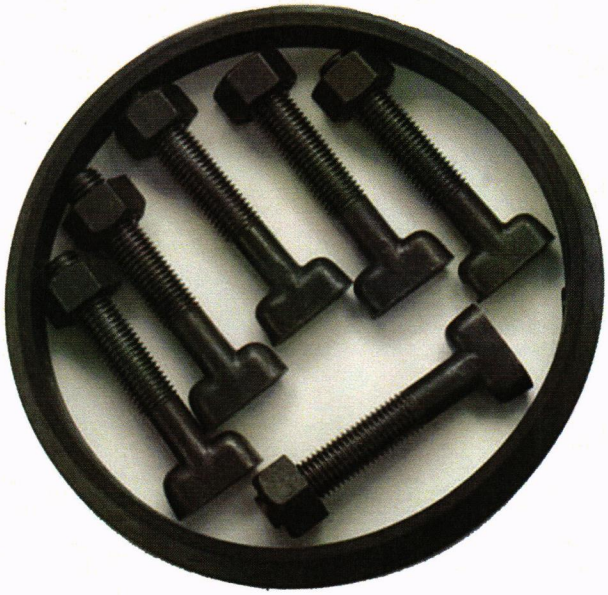

Specifications

Includes MJ Gasket and standard T-Head Bolts

Part #	Size
IMJBGPM	3"
IMJBGPP	4"
IMJBGPU	6"
IMJBGPX	8"
IMJBGP10	10"
IMJBGP12	12"
IMJBGP14	14"
IMJBGP16	16"
IMJBGP18	18"
IMJBGP20	20"

PROSELECT Glands, Gaskets, T-Head Bolts and Mechanical Joint Accessory Packs are sold exclusively through Ferguson Enterprises and its affiliates.

Ferguson Enterprises guarantees the quality and compliance to the listed specifications.

PROSELECT is a registered trademark of Ferguson Enterprises.

Warranty

This PROSELECT product carries a 1-year limited warranty.

©2023 Ferguson Enterprises, LLC 0823 5683572

SIGMA™

Quality – Service – Commitment – Delivered.

ONE-LOK™ MODEL SLDE WEDGE RESTRAINT FOR DUCTILE IRON PIPE

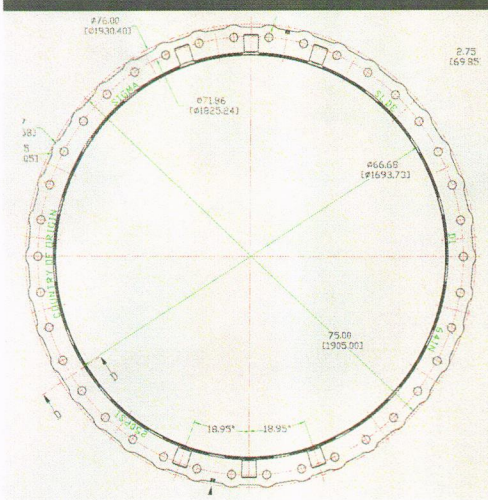

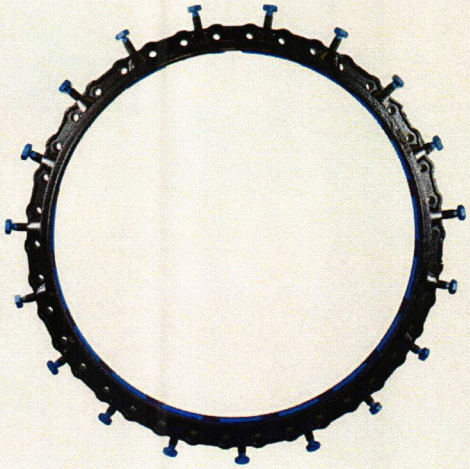



PRODUCT SPECIFICATIONS

MATERIAL:
- Gland body, wedge inserts and break-off top actuating bolts are manufactured of high strength ductile iron in accordance with ASTM A536, Grade 65-45-12. Wedge inserts are heat-treated to a hardness of 370 BHN minimum.

SIZE RANGE:
- 3" through 64"

DIMENSION:
- Conform to ANSI/AWWA C111/A21.11 & ANSI/AWWA C153/A21.53 standards

PRESSURE RATING:
- Sizes 3"-16" carry a 350 psi WWP and sizes 18"- 64" carry a 250 psi WWP while providing a minimum 2:1 factor of safety.

COATING:
- Asphaltic black enamel
- Electro-deposition "CORRSAFE™" available upon request. For further information, please refer to our CORRSAFE Product Information sheet at http://www.sigmaco.com/pipe-restraint-product-coatings-linings/

APPROVALS:
- Underwriters Laboratories' listed in sizes 3"-36" and Factory Mutual approved in sizes 3"-12".

DEFLECTION:
- 5° on 3"-12", 2° on 14"-16", 1.5° on 18"-30" and 1° on 36"- 64"

TRACEABILITY:
- Gland body, wedge inserts and break-off top actuating bolts are individually cast with exact heat code information.

INSTALLATION:
- In accordance with manufacturer's recommendation and applicable AWWA standards.

UL LISTED FM APPROVED

Note: This product is not designed to be used on plain end fittings.

SIGMA™

Quality – Service – Commitment – Delivered.

ONE-LOK™ MODEL SLCE WEDGE RESTRAINT FOR PVC PIPE

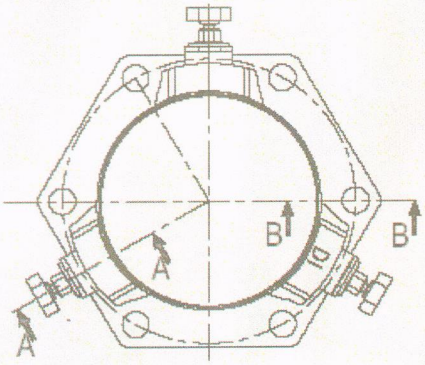

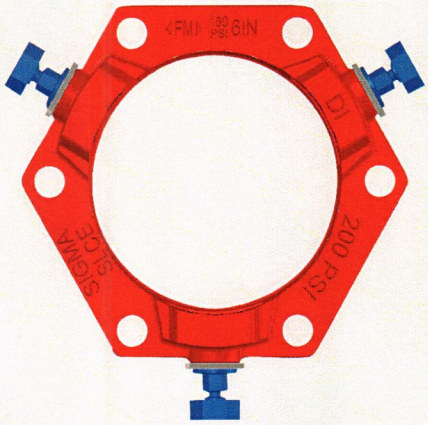

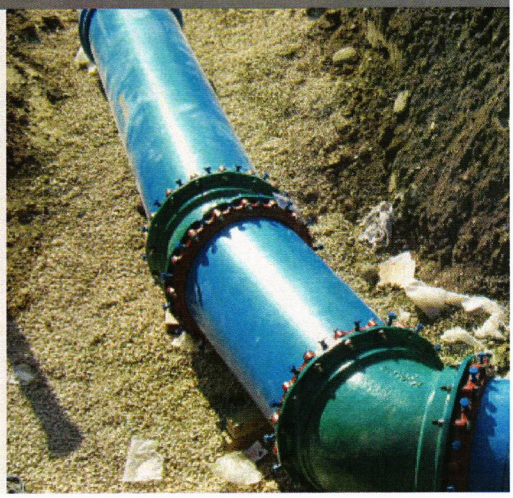

PRODUCT SPECIFICATIONS

MATERIAL:
- Gland body, wedge inserts and break-off top actuating bolts are manufactured of high strength ductile iron in accordance with ASTM A536, Grade 65-45-12.

SIZE RANGE:
- 3" through 36"

DIMENSION:
- Conform to ANSI/AWWA C111/A21.11 & ANSI/AWWA C153/A21.53 standards

PRESSURE RATING:
- Equal to the water working pressure rating of the pipe upon which it is installed with a minimum 2:1 factor of safety.

COATING:
- Red Alkyd paint
- Electro-deposition "CORRSAFE™" available upon request. For further information, please refer to our CORRSAFE Product Information sheet at http://www.sigmaco.com/pipe-restraint-product-coatings-linings/

APPROVALS:
- Underwriters Laboratories' listed in sizes 4"-12" to ASTM F1674 (latest revision) and Factory Mutual approved in sizes 4"-12".

DEFLECTION:
- 5° on 3"-12", 2° on 14"-16", 1.5° on 18"-30" and 1° on 36"

TRACEABILITY:
- Gland body, wedge inserts and break-off top actuating bolts are individually cast with exact heat code information.

INSTALLATION:
- In accordance with manufacturer's recommendation and applicable AWWA standards.

UL LISTED FM APPROVED

Lead time is
Stock - 6 weeks
Ferguson Waterworks

SEWER MATERIAL BID LIST 2025-2026

		Smyrna							
		S = SEWER							
S	**ITEM #**	**DESCRIPTION**	**SIZE**	**APPROVED PART #**	**ALTERNATE PART #**	**UNIT**	**EST. QTY. FY 26/27**	**BID DER**	**UNIT PRICE**
		RECLAIMED: METER BOXES and ACCESSORIES							
S	51	36H COMCRETE BOX METER BOX BODY ONLY		36H			6		
S	52	CI LID "SEWER" FOR 36H BOX		36T CI LID SEWER			6		
S	53	RECLAIMED WATER SQUARE VALVE BOX CASTING & LID		JBS 8006		EA	4		$264.77
S	54	SEWER SQUARE CLEANOUT CASTING & LID		JBS 8006		EA	6		$246.75
S	**ITEM #**	**DESCRIPTION**	**SIZE**	**APPROVED PART #**	**ALTERNATE PART #**	**UNIT**	**EST. QTY. FY 26/27**	**BID DER**	**UNIT PRICE**
		MANHOLES							
S	58	MANHOLE CASTING/LID; JBS WATER TIGHT W/ T BAR	26"	JBS 1123		EA	2		$1,075.00
S	59	MANHOLE CASTING/LID; JBS	26"	JBS 1150		EA	2		$451.11
S	61	CONCRETE MANHOLE RISER	4"			EA	5		
S	62	CONCRETE MANHOLE RISER	6"			EA	5		
S	63	CONCRETE MANHOLE RISER	12"			EA	5		
S	64	MANHOLE RISER RING SOLID-CAST IRON	24"x1.5"			EA	5		
S	65	MANHOLE RISER RING SOLID-CAST IRON	26" x1.5"			EA	5		
S	**ITEM #**	**DESCRIPTION**	**SIZE**	**APPROVED PART #**	**ALTERNATE PART #**	**UNIT**	**EST. QTY. FY 26/27**	**BID DER**	**UNIT PRICE**
		PIPE							
s	71	CTS ROLL REUSE PIPE (500' ROLLS) (PURPLE)	1"			FT	500		
s	72	CTS ROLL REUSE PIPE (500' ROLLS) (PURPLE)	2"			FT	500		
S	73	SEWER PIPE SCH 40	4"			FT	200		2.40 PER FOOT
S	74	C-900 REUSE WATER PIPE	4"			FT	50		
S	75	C-900 PURPLE PIPE	6"			FT	40		
S	77	SDR 21 SEWER PIPE	6"			FT	100		8.65 PER FOOT
S	78	SDR 26 SEWER PIPE	6"			FT	100		5.93 PER FOOT
S	80	CL 350 DUCTILE IRON SEWER PIPE W/ PROTECTO 401 LINING OR APPROVED EQUAL	8"			FT	50		70.00 PER FOOT

SEWER MATERIAL BID LIST 2025-2026

S	81	C900 REUSE WATER PIPE	8"			FT	40		
S	82	SDR 21 SEWER PIPE	8"			FT	100		12.18 PER FOOT
S	83	SDR 26 SEWER PIPE	8"			FT	100		10.69 PER FOOT
S	84	SDR 35 SEWER PIPE	8"			FT	20		8.29 PER FOOT
S	85	SDR 35 SEWER PIPE	10"			FT	20		12.41 PER FOOT
S	86	C900 REUSE WATER PIPE	12"			FT	20		
S	87	SDR 26 SEWER PIPE	12"			FT	100		24.29 PER FOOT
S	88	SDR11 IPS HDPE PIPE (RE-USE)	6"			FT	20		
S	89	SDR11 IPS HDPE PIPE (RE-USE)	8"			FT	20		
S	92	SDR 26 SEWER PIPE	15"			EA	20		
S	93	CL 350 DUCTILE IRON SEWER PIPE W/ PROTECTO 401 LINING OR APPROVED EQUAL	20"			EA	20		197.51 PER FOOT
S	**ITEM #**	**DESCRIPTION**	**SIZE**	**APPROVED PART #**	**ALTERNATE PART #**	**UNIT**	**EST. QTY. FY 26/27**	**BID DER**	**UNIT PRICE**
		REPAIR CLAMPS							
S	96	SEWER REPAIR CLAMP;JCM	8" x 12" LONG (8.20-8.60)	101-0840-12		EA	2		
S	97	SEWER REPAIR CLAMP; ROMAC	12" (12.10 - 12.50)	171-125012000		EA	2		
S	**ITEM #**	**DESCRIPTION**	**SIZE**	**APPROVED PART #**	**ALTERNATE PART #**	**UNIT**	**EST. QTY. FY 26/27**	**BID DER**	**UNIT PRICE**
		TAPPING SADDLES							
S	102	ROMAC SEWER TAPPING SADDLE	(8.00-14.40)	218-66640		EA	2		$209.43
S	**ITEM #**	**DESCRIPTION**	**SIZE**	**APPROVED PART #**	**ALTERNATE PART #**	**UNIT**	**EST. QTY. FY 26/27**	**BID DER**	**UNIT PRICE**
		FITTINGS							
S	110	BRASS CLEAN-OUT CAP; MATCO-NORCA	4"	10082647091488		EA	15		9.43 ~~$2.18~~
S	111	PLASTIC CLEAN-OUT CAP	4"			EA	10		$11.97
S	112	GLUE FEMALE ADAPTOR; MULTI FITTINGS	4"			EA	15		$14.71
S	114	GLUE LONG SWEEP TEE WYE; CHARLOTTE	4"	6 11 942 03564 9		EA	10		$23.61
S	115	GLUE 45° FEMALE COUPLING; LASCO	4"	10 02552871829 6		EA	5		$15.18
S	116	GLUE COUPLING; GPK	4"			EA	10		$7.40

SEWER MATERIAL BID LIST 2025-2026

S	ITEM #	DESCRIPTION	SIZE	APPROVED PART #	ALTERNATE PART #	UNIT	EST. QTY. FY 26/27	BID DER	UNIT PRICE
S	117	GLUE 22° FEMALE COUPLING; LASCO	4"			EA	5		$10.96
S	119	QUICK CAP	6"			EA	2		$10.07
S	120	GLUE FEMALE ADAPTOR	6"			EA	15		$38.00
S	122	BRASS CLEAN-OUT CAP; MATCO-NORCA	6"			EA	20		$12.18
S	123	PLASTIC CLEAN-OUT CAP	6"			EA	2		$22.93
S	124	GLUE COUPLING; GPK	6"			EA	6		$13.80
S	125	GLUE 45° WYE; MULTI FITTINGS	6"	22454 40306		EA	15		$44.20
S	126	GLUE 22° FEMALE COUPLING; MULTI FITTINGS	6"	22434 40969		EA	5		$43.15
S	127	GLUE 22° MALE/FEMALE COUPLING; GPK	6"			EA	5		$43.15
S	128	GLUE 45° MALE/FEMALE COUPLING; MULTI FITTINGS	6"	22454 40406		EA	10		$40.04
S	129	GLUE 45 DEGREE/FEMALE COUPLING; MULTI FITTINGS	6"	22454 40506		EA	5		$22.49
S	130	SPIGOT x HUB SDR 35 x SCH 40	6" X 4"			EA	5		$31.61
		GASKET COUPLINGS							
S	135	GASKET COUPLING; MULTI FITTINGS	6"			EA	2		$38.63
S	136	GASKET 22° COUPLING; HARCO	6"			EA	2		$30.83
S	137	GASKET 45° COUPLING; HARCO	6"			EA	2		$31.77
S	138	GASKET 45° MALE/FEMALE; MULTI FITTINGS	6"			EA	2		$27.32
S	139	GASKET COUPLING; GPK	8"			EA	2		$65.57
S	142	WYE GASKET	8" X 6"			EA	2		$97.36
S	144	GASKET COUPLING; GPK	10"			EA	2		$145.53
S	145	GASKET COUPLING; GPK	12"	106-0012		EA	2		$198.73
S	147	GASKET COUPLING; IPEX	15"	043637		EA	2		$411.24

SEWER MATERIAL BID LIST 2025-2026

S	ITEM #	DESCRIPTION	SIZE	APPROVED PART #	ALTERNATE PART #	UNIT	EST. QTY. FY 26/27	BID DER	UNIT PRICE
		FERNCOS							
S	152	COUPLING; FERNCO	4" CI/PVC X 4" CI/PVC	1056-44		EA	15		$6.80
S	153	COUPLING; FERNCO	4" CONC X 4" CI/PVC	1006-44		EA	6		$6.80
S	154	COUPLING; FERNCO	4" CLAY X 4" PVC	1002-44		EA	6		$6.80
S	155	COUPLING; FERNCO	6" CLAY X 4" PVC	1001-64		EA	6		$15.81
S	156	COUPLING; FERNCO	6" CI/PVC X 4" CI/PVC	1056-64		EA	6		$15.81
S	157	COUPLING; FERNCO	6" CONC X 6" CI/PVC	1006-66		EA	6		$14.90
S	158	COUPLING; FERNCO	6" CLAY X 6" PVC	1002-66		EA	6		$14.90
S	159	COUPLING; FERNCO	6" CLAY X 6' CLAY	1001-66		EA	6		$14.90
S	160	COUPLING;FERNCO	6" CI/PVC X 6" CI/PVC	1056-66		EA	8		$14.90
S	161	COUPLING; FERNCO	6" AC or DI X 6" CI or PVC	1051-66		EA	2		$14.90
S	162	COUPLING; FERNCO	8" CI/PVC X 6" CI/PVC	1056-86		EA	2		$27.00
S	163	COUPLING; FERNCO	8" CI X 8" CI	1056-84		EA	2		$106.55
S	164	COUPLING; FERNCO	8" CONC X 8" CI/PVC	1006-68		EA	2		$106.55
S	165	COUPLING; FERNCO	8" CLAY X 8" PVC	1002-88		EA	2		$25.00
S	166	COUPLING; FERNCO	10" CI/PVC X 10" CI/PVC	1056-1010		EA	2		$37.00
S	167	COUPLING; FERNCO	10" CLAY X 10" CI/PVC	1004-88		EA	2		$25.00
S	168	COUPLING; FERNCO	10" CONC X 10" CI/PVC	1055-1010		EA	2		$37.00
S	169	COUPLING; FERNCO	12" CI/PVC X 12" CI/PVC	1056-1212		EA	2		$38.00
S	170	COUPLING; FERNCO	12" CLAY X 12" CI/PVC	1002-1212		EA	2		$38.00
S	171	COUPLING;FERNCO	12" CONC X 12" PVC	1006-1212		EA	2		$38.00
S	172	COUPLING;FERNCO	15" CLAY X 15" PVC	1002-1515		EA	2		$60.00

SEWER MATERIAL BID LIST 2025-2026

		Not bidding every line item							

1 week lead time

GAS MATERIALS BID LIST 2025-2026

GAS	ITEM #	DESCRIPTION	SIZE	APPROVED PART #	ALTERNATE PART #	UNIT	EST QTY FY 26/27	BIDDER	UNIT PRICE	ESTIMATED DELIVERY TIME
		METER RISERS								
G	89	RISER, ANODELESS, 36V X 24H, ELSTER PERFECTION	3/4" X 3/4"	79207		EA	300			
G	90	RISER, ANODELESS, ELSTER PERFECTION	1" X 1"	75766		EA	30			
G	92	RISER, ANODELESS, ELSTER PERFECTION,	2" X 2"	ASR2-2F-PB		EA	30			
GAS	ITEM #	DESCRIPTION	SIZE	APPROVED PART #	ALTERNATE PART #	UNIT	EST QTY FY 26/27	BIDDER	UNIT PRICE	ESTIMATED DELIVERY TIME
		CUTTOFS								
G	96	STOPCOCK; JOMAR 241-004D	3/4"	241-004D		EA	300			
G	97	STOPCOCK, HIGH PRESSURE, MUELLER	3/4"	3/4" H-11185		EA	10			
G	98	STOPCOCK;JOMAR 240-005B STRAIGHT	1"	240-005B		EA	30			
G	99	STOPCOCK; JOMAR 241-005D	1"	241-005D		EA	40			
G	100	STOPCOCK; 175 MAOP MUELLER	1 1/4"	1 1/4"H11175		EA	10			
G	101	STOPCOCK; 175 MAOP MCDONALD	1 1/2"	560 B 1 1/2"		EA	10			
G	102	STOPCOCK; 175 MAOP MUELLER	2"	2" H11175		EA	30			
GAS	ITEM #	DESCRIPTION	SIZE	APPROVED PART #	ALTERNATE PART #	UNIT	EST QTY FY 26/27	BIDDER	UNIT PRICE	ESTIMATED DELIVERY TIME
		POLYETHYLENE PIPE								
G	107	PIPE; HIGH DENSITY 8300 4710 BLK/YELLOW STRIPE-SDR-11 (500 FT ROLLS)	3/4"	1114569-83P 00.75"		FT	20000			
G	108	PIPE; HIGH DENSITY 8300 4710 BLK/YELLOW STRIPE-SDR-11(500 FT ROLLS)	1"	1114606-83P 01.00"		FT	3000			
G	109	PIPE; HIGH DENSITY 8300 4710 BLK/YELLOW STRIPE -SDR-11(500 FT ROLLS)	1 1/4"	1056882-83P 01.25"		FT	350			
G	110	PIPE; HIGH DENSITY 8300 4710 BLK/YELLOW STRIPE-SDR-11 (500 FT ROLLS)	2"	1056925-83P 0.200		FT	15000			
G	111	PIPE; HIGH DENISTY 8300 4710 BLK/YELLOW STRIPE -SDR-11(40 FT PER SECTION)	3"	1056967-83P 03.00"		FT	200			
G	112	PIPE; HIGH DENSITY 8300 4710 BLK/YELLOW STRIPE-SDR-11(40 FT PER SECTION)	4"	1061088-83P 04.00"		FT	5000			
G	113	PIPE; HIGH DENSITY 8300 4710 BLK/YELLOW STRIPE -SDR-11(40 FT PER SECTION)	6"	1057061-83P 06.00"		FT	2000			
		DURA LINE NOT ACCEPTED								
GAS	ITEM #	DESCRIPTION	SIZE	APPROVED PART #	ALTERNATE PART #	UNIT	EST QTY FY 26/27	BIDDER	UNIT PRICE	ESTIMATED DELIVERY TIME
		POLYETHYLENE FITTINGS								
G	118	CAP; BUTT FUSE HIGH DENISTY 8100 4710	3/4"	BBF40-07		EA	100			
G	119	CAP; BUTT FUSE HIGH DENSITY 8100 4710	1"	BBF40-1		EA	15			
G	121	CAP; BUTT FUSE HIGH DENSITY8100 4710	2"	BBF40-2		EA	40			
G	122	CAP; BUTT FUSE HIGH DENSITY 8100 4710	3"	BBF40-3		EA	10			
G	123	CAP; BUTT FUSE HIGH DENSITY 8100 4710	4"	BBF40-4		EA	25			
G	124	CAP; BUTT FUSE HIGH DENSITY 8100 4710	6"	BBF40-6		EA	10			
G	125	REDUCER; BUTT FUSE HIGH DENSITY 8100 4710	1" X 1/2"	1006458		EA	5			
G	126	REDUCER; BUTT FUSE HIGH DENSITY 8100 4710	1" X 3/4"	1036888		EA	10			
G	127	REDUCER; BUTT FUSE HIGH DENSITY 8100 4710	1 1/4" X 1"	1007964		EA	10			
G	128	REDUCER; BUTT FUSE HIGH DENISTY 8100 4710	2" X 1"	1063171		EA	10			
G	129	REDUCER; BUTT FUSE HIGH DENSITY 8100 4710	2" X 1 1/4"	1007977		EA	10			

GAS MATERIALS BID LIST 2025-2026

GAS	ITEM #	DESCRIPTION	SIZE	APPROVED PART #	ALTERNATE PART #	UNIT	EST QTY FY 26/27	BIDDER	UNIT PRICE	ESTIMATED DELIVERY TIME
G	130	REDUCER; BUTT FUSE HIGH DENSITY 8100 4710	3" X 2"	1007985		EA	10			
G	131	REDUCER; BUTT FUSE HIGH DENSITY 8100 4710	6" X 4"	1006469		EA	10			
G	132	REDUCER; BUTT FUSE HIGH DENSITY 8100 4710	4" x 3"	1007992		EA	6			
G	133	REDUCER; BUTT FUSE HIGH DENSITY 8100 4710	4" X 2"	1006466		EA	25			
G	134	TEE; HIGH DENSITY 8100 4710	3/4"	1007902		EA	30			
G	135	TEE; HIGH DENSITY 8100 4710	1"	1007910		EA	20			
G	136	TEE; HIGH DENSITY 8100 4710	1 1/4"	1007917		EA	4			
G	137	TEE; HIGH DENSITY 8100 4710	2"	1006426		EA	20			
G	138	TEE; HIGH DENSITY 8100 4710	3"	1007933		EA	4			
G	139	TEE; HIGH DENSITY8100 4710	4"	1006434		EA	20			
G	140	TEE; HIGH DENSITY 8100 4710	6"	1006442		EA	6			
G	141	ELBOW; 90 D HIGH DENSITY 8100 4710	2"	1006422		EA	10			
G	142	ELBOW; 90 D HIGH DENSITY 8100 4710	3"	1007932		EA	10			
G	143	ELBOW; 90 D HIGH DENSITY 8100 4710	4"	1006432		EA	10			
G	144	ELBOW; 90 D HIGH DENSITY 8100 4710	6"	1006440		EA	10			
G	145	ELBOW; 45 D HIGH DENSITY 8100 4710	4"	1006430		EA	10			
GAS	ITEM #	DESCRIPTION	SIZE	APPROVED PART #	ALTERNATE PART #	UNIT	EST QTY FY 26/27	BIDDER	UNIT PRICE	ESTIMATED DELIVERY TIME
		BOLT ON STEEL TAPPING SADDLE								
G	149	TAPPING SADDLE; STEEL, CONTINENTAL	1 1/4"	1315-15-1013-00		EA	4			
G	150	TAPPING SADDLE; STEEL, CONTINENTAL	2" X 3/4"	1315-17-1013-00		EA	4			
G	151	TAPPING SADDLE; STEEL, CONTINENTAL	2" X 1"	1315-17-1014-00		EA	4			
G	152	TAPPING SADDLE; STEEL, CONTINENTAL	2 1/2" X 1"			EA	4			
G	153	TAPPING SADDLE; STEEL, CONTINENTAL	3" X 1""	1315-19-1014-00		EA	4			
G	154	TAPPING SADDLE; STEEL, CONTINENTAL	4" X 1"	1315-21-1014-00		EA	4			
G	155	TAPPING SADDLE; STEEL, CONTINENTAL	6" X 1"	1315-24-1014-00		EA	4			
GAS	ITEM #	DESCRIPTION	SIZE	APPROVED PART #	ALTERNATE PART #	UNIT	EST QTY FY 26/27	BIDDER	UNIT PRICE	ESTIMATED DELIVERY TIME
		LYCOFIT FITTINGS								
G	160	REDUCER; LYCOFIT	3/4" X 1/2"	LCY060Y010B-RR		EA	10			
G	161	TEE; LYCOFIT	3/4"	LCO60Y-3TR		EA	25			
G	162	TEE; LYCOFIT	1"	LC070Y-3TR		EA	20			
G	163	TEE; LYCOFIT	2"	LC200Y-3TR		EA	20			
G	164	LYCO CAP	3/4"	LC060Y ECR		EA	50			
G	165	LYCO CAP	1"	LC070Y-ECR		EA	20			
G	166	LYCO CAP	2"	LC200Y-ECR		EA	10			
G	167	COUPLING; LYCOFIT	3/4"	LC 060 Y-DER		EA	100			
G	168	COUPLING; LYCOFIT	1/2"	LC 010 B-DER		EA	10			
G	169	COUPLING; LYCOFIT	1"	LC 070Y-DER		EA	50			
G	170	COUPLING; LYCOFIT	1 1/4"	LCO80X-DESR		EA	10			
G	171	COUPLING; LYCOFIT	2"	LC200Y-DESR		EA	40			
G	172	COUPLING; LYCOFIT REPAIR	2"	LC 200Y-DER		EA	15			
GAS	ITEM #	DESCRIPTION	SIZE	APPROVED PART #	ALTERNATE PART #	UNIT	EST QTY FY 26/27	BIDDER	UNIT PRICE	ESTIMATED DELIVERY TIME
		POLYVALVES								
G	177	POLYVALVE; KEROTEST FULL PORT, 4710	1"	99051111	PERFECTION 45011	EA	10			

GAS MATERIALS BID LIST 2025-2026

G	178	POLYVALVE; KEROTEST FULL PORT, 4710	1 1/4"	99051211	PERFECTION 45172	EA	5			
G	179	POLYVALVE; KEROTEST FULL PORT, 4710	2"	99052011	PERFECTION 46001	EA	25			
G	180	POLYVALVE; KEROTEST FULL PORT, 4710	3'	99053011	PERFECTION 47016	EA	5			
G	181	POLYVALVE; KEROTEST FULL PORT, 4710	4"	99054011	PERFECTION 47010	EA	25			
G	182	POLYVALVE; KEROTEST FULL PORT, 4710	6"	99056011	PERFECTION 48000	EA	5			
GAS	**ITEM #**	**DESCRIPTION**	**SIZE**	**APPROVED PART #**	**ALTERNATE PART #**	**UNIT**	**EST QTY FY 26/27**	**BIDDER**	**UNIT PRICE**	**ESTIMATED DELIVERY TIME**
		TRANSITION FITTINGS								
G	187	TRANSITION FITTING; STEEL - ELSTER PERFECTION	3/4" X 1/2"	700303		EA	5			
G	188	TRANSITION FITTING; STEEL - ELSTER PERFECTION	3/4" X 3/4"	700901		EA	5			
G	189	TRANSITION FITTING; STEEL - ELSTER PERFECTION	1" X 1"	701301		EA	5			
G	190	TRANSITION FITTING; STEEL - ELSTER PERFECTION	2" X 2"	702730		EA	5			
G	191	TRANSITION FITTING; STEEL - ELSTER PERFECTION	3" X 3"	702903		EA	5			
G	192	TRANSITION FITTING; STEEL - ELSTER PERFECTION	4" X 4"	703129		EA	5			
G	193	TRANSITION FITTING; STEEL - ELSTER PERFECTION	6" X 6"	704116		EA	5			
GAS	**ITEM #**	**DESCRIPTION**	**SIZE**	**APPROVED PART #**	**ALTERNATE PART #**	**UNIT**	**EST QTY FY 26/27**	**BIDDER**	**UNIT PRICE**	**ESTIMATED DELIVERY TIME**
		DRESSER COUPLINGS								
G	207	COUPLING; ARMORED COMPRESSION, DRESSER	3/4" X 6"	0900-0001-082		EA	5			
G	208	COUPLING; ARMORED COMPRESSION, DRESSER	1" X 6"	0090-0002-082		EA	5			
G	209	COUPLING; ARMORED COMPRESSION, DRESSER	1 1/4" X 6"	0090-0003-082		EA	5			
G	210	COUPLING; ARMORED COMPRESSION, DRESSER	1 1/2" X 6"	0090-0004-082		EA	5			
G	211	COUPLING; ARMORED COMPRESSION, DRESSER	2" X 6"	0090-0005-082		EA	5			
G	212	COUPLING; ARMORED COMPRESSION, DRESSER	3/4" X 12"	0090-0090-082		EA	5			
G	213	COUPLING; ARMORED COMPRESSION, DRESSER	1" X 12"	0090-0091-082		EA	5			
G	214	COUPLING; ARMORED COMPRESSION, DRESSER	1 1/4" X 12"	0090-0092-082		EA	5			
G	215	COUPLING; ARMORED COMPRESSION, DRESSER	1 1/2" X 12"	0090-0093-082		EA	5			
G	216	COUPLING; ARMORED COMPRESSION, DRESSER	2" X 12"	0090-0094-082		EA	5			
G	217	COUPLING; ARMORED COMPRESSION TEE, DRESSER	3/4"	0090-0710-082		EA	5			
G	218	COUPLING; ARMORED COMPRESSION TEE, DRESSER	1"	0090-0711-082		EA	5			
GAS	**ITEM #**	**DESCRIPTION**	**SIZE**	**APPROVED PART #**	**ALTERNATE PART #**	**UNIT**	**EST QTY FY 26/27**	**BIDDER**	**UNIT PRICE**	**ESTIMATED DELIVERY TIME**
		WELD TAP TEES								
G	223	MUELLER WELD ON TAP	3/4"	H - 17500 3/4"		EA	5			
G	224	MUELLER WELD ON TAP	1"	H - 17500 1"		EA	5			
G	225	MUELLER WELD ON TAP	2"	H - 17500 2"		EA	5			
GAS	**ITEM #**	**DESCRIPTION**	**SIZE**	**APPROVED PART #**	**ALTERNATE PART #**	**UNIT**	**EST QTY FY 26/27**	**BIDDER**	**UNIT PRICE**	**ESTIMATED DELIVERY TIME**
		VALVE BOXES								
G	230	TALL VALVE BOX WITH LIDS; SIGMA		562-S-G		EA	50			
G	231	SHORT VALVE BOX WITH LIDS; SIGMA		461-S-G		EA	10			
G	232	VALVE BOX EXTENSION; SIGMA	1"	VBR-1		EA	25		$21.71	
G	233	VALVE BOX EXTENSION; SIGMA	1.5"	VBR 1.5		EA	25		$28.29	
G	234	VALVE BOX EXTENSION; SIGMA	2"	VBR - 2		EA	30		$33.94	

GAS MATERIALS BID LIST 2025-2026

G	235	VALVE BOX EXTENSION; SIGMA	3"	VBR -3		EA	25		$33.57	
G	236	VALVE BOX EXTENSION; SIGMA	4"	VBR - 4		EA	25		$33.86	
G	237	VALVE BOX EXTENSION; SIGMA	6"	VBR - 6		EA	25		$48.34	
		HIGHLIGHTED PORTION IS ALSO ON THE WATER BID (W-500-505)		***PLEASE BID ON WATER (W-500-505)* AS WELL**	***PLEASE BID ON WATER (W-500-505)* AS WELL**					
GAS	**ITEM #**	**DESCRIPTION**	**SIZE**	**APPROVED PART #**	**ALTERNATE PART #**	**UNIT**	**EST QTY FY 26/27**	**BIDDER**	**UNIT PRICE**	**ESTIMATED DELIVERY TIME**
		METAL INSERTS								
G	243	METAL STIFFNER INSERTS, ELSTER PERFECTION	3/4" X 6"	74201		EA	5			
G	244	METAL STIFFNER INSERTS, ELSTER PERFECTION	1" X 6"	74203		EA	5			
G	245	METAL STIFFNER INSERTS, ELSTER PERFECTION	1 1/4" x 6"	74204		EA	5			
G	246	METAL STIFFNER INSERTS, ELSTER PERFECTION	1 1/2" x 6"	74206		EA	5			
G	247	METAL STIFFNER INSERTS, ELSTER PERFECTION	2" X 6"	74205		EA	5			
G	248	METAL STIFFNER INSERTS, ELSTER PERFECTION	3" X 6"	74210		EA	5			
GAS	**ITEM #**	**DESCRIPTION**	**SIZE**	**APPROVED PART #**	**ALTERNATE PART #**	**UNIT**	**EST QTY FY 26/27**	**BIDDER**	**UNIT PRICE**	**ESTIMATED DELIVERY TIME**
		MAGNESIUM ANODES								
G	253	ANODES, MAG	5#	ANODE - 5		EA	5			
G	254	ANODES, MAG	17#	ANODE - 7		EA	5			
GAS	**ITEM #**	**DESCRIPTION**	**SIZE**	**APPROVED PART #**	**ALTERNATE PART #**	**UNIT**	**EST QTY FY 26/27**	**BIDDER**	**UNIT PRICE**	**ESTIMATED DELIVERY TIME**
		TRACER WIRE								
G	259	TRACER WIRE - 12 GAUGE COPPER (500' ROLLS)		KRIS-TECH WIRE CW0177500		FT	30000			
GAS	**ITEM #**	**DESCRIPTION**	**SIZE**	**APPROVED PART #**	**ALTERNATE PART #**	**UNIT**	**EST QTY FY 26/27**	**BIDDER**	**UNIT PRICE**	**ESTIMATED DELIVERY TIME**
		ELECTROFUSION								
G	262	COUPLING; CENTRAL 4710 HDPE	1" X 1"	5760006		EA	30			
G	263	COUPLING; CENTRAL 4710 HDPE	2" X 2"	5760012		EA	20			
G	264	COUPLING; CENTRAL 4710 HDPE	3"	5757007		EA	10			
G	265	COUPLING; CENTRAL 4710 HDPE	4"			EA	20			
G	266	COUPLING; CENTRAL 4710 HDPE	6"			EA	10			
G	267	COUPLING; CENTRAL-REDUCING 4710 HDPE	1" X 3/4"			EA	50			
G	268	COUPLING; CENTRAL-REDUCING 4710 HDPE	1" X 1/2"			EA	10			
G	269	COUPLING; CENTRAL-TAP TEE 4710 HDPE	2" x 3/4"				200			
G	270	COUPLING; CENTRAL-TAP TEE 4710 HDPE	2" X 1"			EA	100			
G	271	COUPLING; CENTRAL- TAP TEE 4710 HDPE	3" x 1"			EA	20			
G	272	COUPLING; CENTRAL-TAP TEE 4710 HDPE	4" x 3/4"				100			
G	273	COUPLING; CENTRAL-TAP TEE 4710 HDPE	4" X 1"			EA	100			
G	274	COUPLING; CENTRAL-TAP TEE 4710 HDPE	6" X 1"			EA	20			
G	275	COUPLING; CENTRAL-TAP TEE-HV 4710 HDPE	2" X 2"			EA	20			
G	277	COUPLING; CENTRAL-TAP TEE-HV 4710 HDPE	3" X 2"			EA	10			
G	278	COUPLING; CENTRAL-TAP TEE-HV 4710 HDPE	4" X 2"			EA	10			
G	279	COUPLING; CENTRAL-TAP TEE-HV 4710 HDPE	6" X 2"			EA	10			

GAS MATERIALS BID LIST 2025-2026

GAS	ITEM #	DESCRIPTION	SIZE	APPROVED PART #	ALTERNATE PART #	UNIT	EST QTY FY 26/27	BIDDER	UNIT PRICE	ESTIMATED DELIVERY TIME
		EXCESS FLOW VALVES								
G	299	EXCESS FLOW VALVE SDR 11 IPS 4710 DRISCO 8300 SERIES 700	3/4"	UMAC IPS SDR11 8300 BFS/700 EFV	50098GB	EA	250			
G	300	EXCESS FLOW VALVE SDR 11 IPS PLEXO 4710 SERIES 1800	1"	UMAC SERIES 1800 GREEN LABEL		EA	15			
G	301	EXCESS FLOW VALVE SDR 11 IPS PLEXO 4710 SERIES 2600	1"	UMAC SERIES 2600 PINK LABEL		EA	10			

AGREEMENT

This Agreement is made and entered into as of this 19 day of May, 2026, by and between Grayson Hubbuch, a Fortiline Water Works (the "Bidder") and the Town of Smyrna, Tennessee, a Tennessee municipal corporation (the "Town") for the purpose of 2026 Town of Smyrna Annual Bid 2026-2027

WHEREAS, the Bidder has submitted a quotation for the provision of certain products and/or services to the Town, all in accordance with the terms of the Invitation to Submit Quotations attached hereto and incorporated herein by reference as if set forth at length verbatim as Exhibit A (the "ISQ"), and which Proposal from the Bidder is attached hereto and incorporated herein by reference as if set forth at length verbatim as Exhibit B (the "Quotation"); the ISQ and the Quotation, together with any and all ancillary documents thereto, shall be collectively referred to herein as the "Bid Documents"; and

WHEREAS, the Town now desires to accept the Bidder's quotation, in accordance with the terms set forth in such Bid Documents.

NOW, THEREFORE, in consideration of the mutual covenants contained herein, and for other good and valuable consideration, the receipt and sufficiency of which is hereby acknowledged, the undersigned do hereby agree as follows:

1. Acceptance of Bid Documents. The terms of the Bid Documents, as incorporated herein by reference, are hereby accepted by the parties hereto. The Bidder hereby agrees to provide the goods and/or services contemplated by such Bid Documents in accordance with the terms set forth therein. The Town hereby accepts the Bidder's quotation to provide the goods and/or services contemplated by such Bid Documents in accordance with the terms set forth therein.

2. Entire Agreement. This Agreement, including the exhibits and any other documents referred to herein or therein, which form a part hereof, contains the entire understanding of the parties with respect to its subject matter. There are no restrictions, agreements, promises, warranties, covenants or undertakings other than those expressly set forth herein or therein. This Agreement supersedes all prior written or oral agreements and understandings between the parties with respect to its subject matter and may not be altered, modified or amended, in whole or in part, except by the express written authorization and consent of the parties hereto.

3. Severability. This agreement constitutes the product of negotiations of the parties hereto and any enforcement of hereof will be interpreted in a neutral manner and not more strongly against any party based upon the source of the draftsmanship of this Agreement. If any provision of this Agreement shall be held invalid or unenforceable by a court of competent jurisdiction, the remaining provisions hereof shall continue to be fully effective.

4. Limitation of Liability. The Town of Smyrna shall not be liable for any loss, claim, expense or damage caused by, contributed to or arising out of the acts or omission of Bidder or third parties, whether negligent or otherwise.

5. Warranties. The Bidder warrants to the Town that all materials and equipment furnished under this Contract will be new unless otherwise specified, and that all work will be of good quality, free from faults and defects, suitable for the purpose for which the materials and equipment are furnished, and in conformance with the Agreement. If it does not perform as warranted, Bidder shall use all commercially reasonable efforts to correct the product(s) so that it operates in all material respects in conformity with the written representations of Bidder. If Bidder cannot correct the product(s) within a reasonable period of time, Bidder shall refund the purchase price of the product(s). All work not conforming to these requirements, including substitutions not properly approved and authorized, may be considered defective.

6. Software Deadline, Testing and Acceptance: If applicable to the Agreement, software provided by Bidder shall be installed for the purposes of testing, as stated herein below, no later than one hundred twenty (120) days from the effective date of this Agreement unless the parties, in writing, set a different specific date. In Addition, software provided by Bidder to The Town is subject to inspection and testing to verify that the software conforms to its written specifications and to ensure it meets The Town's needs. The Town shall have seven (7) business days after the software is installed to perform testing of the software using The Town's data. The Town shall provide Bidder with written notice of acceptance or rejection of the software five (5) business days or less after the end of the testing period. If the Town does not provide timely written notice of acceptance or rejection to Bidder, the software shall be deemed to be accepted by The Town. If the software is rejected, The Town may, at its sole discretion, either (1) return the software and receive a refund of all fees paid with respect thereto, or (2) allow Bidder to repair or replace the software, without charge, in a timely manner. In the event The Town elects to allow the Bidder to repair or replace the software, The Town shall have an additional (7) business days in which to accept or reject the software as laid out hereinabove.

7. Use of The Town's Logo or Name: Bidder shall not use The Town's name or any logo in marketing or publicity materials or for marketing or publicity purposes without the prior written authorization from The Town. Bidder shall not issue, publish, or divulge any materials developed or used in the performance of this Agreement or make any statement to the media relating to this Agreement without the prior written consent of The Town.

8. Indemnification. The parties hereto agree that Bidder shall indemnify The Town for any and all claims of negligence, tortious conduct or otherwise unlawful acts committed by Bidder in the performance of their obligations under the terms of this agreement, including any and all attachments or exhibits thereto and Bidder agrees to pay any and all costs associated with the enforcement of the terms of this indemnity agreement by The Town, including but not limited to, court costs, civil judgments, assessments or any other reasonable fees associated therewith. This clause shall survive the expiration or termination of this Agreement and shall remain in full force and effect until the expiration of any applicable statute of limitation. In addition, Article II, Section 29 of the Tennessee Constitution prohibits municipalities from lending their credit to private of public entities and, therefore, prohibits an agreement by The Town to indemnify a third party or agree to a limitation of liability provision.

9. Non-Appropriation: Bidder acknowledges that The Town is a governmental entity, and the validity of this Agreement is based upon the availability of public funding under its authority. In the event The Town fails to appropriate funds or make monies available for any fiscal year covered by the term of this Agreement for services to be provided, this Agreement shall be terminated on the last day of the fiscal year for which funds were appropriated or monies made available for such purposes without liability to The Town, and such termination shall not be a breach of the Agreement, and any unused payment made to Bidder shall be returned to The Town.

10. Tax Exemption: As a tax-exempt entity, The Town shall not be responsible for sales or use taxes incurred for products or services. The Town shall supply Bidder with its Sales and Use Tax Exemption Certificate upon Bidder's request. Bidder shall bear the burden of providing its suppliers with a copy of The Town's tax exemption certificate and Bidder shall assume all liability for such taxes, if any, that should be incurred.

11. Attorney Fees. The parties hereto agree that The Town shall be in no event liable for any attorney's fees which Bidder may incur due to breach of this Agreement by either party; and further, The Town shall not acquiesce to any term in any document that indicates or infers The Town may or shall be responsible for the Attorney's fees of another party or the Bidder's attorney fees.

12. Boycott of Israel. The Bidder certifies that it is not currently engaged in, and covenants that it will not, for the duration of the Contract, engage in a Boycott of Israel, as that term is defined in Tenn. Code Ann. § 12-4-119.

13. Failure to perform. The parties agree, in the event Bidder fails to perform any obligation, other than with regards to the date of delivery, set out in this Agreement, the Town shall be reimbursed by Bidder for any and all expenses associated with having to obtain a new provider to finish out the contracted term, including, but in no way limited to, any charges/fees, which are above and beyond the amount the Town would have paid to Bidder to complete the same task; provided, however, that if the failure, by its nature, is one that can be cured, the Bidder shall have fifteen (15) business days after receipt of written notice from the Town to cure said failure to perform. The parties hereby agree, unless a specific date of delivery is provided in this Agreement or other bid documents, all deliveries shall be made to the Town no later than ninety (90) days from the date of order. The parties further agree that if Bidder, in good faith, is not able to meet this ninety (90) day deadline of delivery due to forces beyond his, her or its control, that were unforeseeable at the time of signing this contract, then this entire Agreement shall be voidable at the sole discretion of the Town. Should the Town elect to void this Agreement due to Bidder's good faith inability, due to forces beyond his, her or its control, and which were unforeseeable at the time of signing this Agreement to meet the delivery deadline, then neither party shall be deemed to have breached this Agreement, and Bidder shall return all monies, within seven (7) business days, paid by the Town for the products/items that could not be delivered in the allotted time.

14. Unilateral Modification of Agreement Not Permitted: Bidder may make unilateral changes to its Privacy Policy, provided any such changes are subject to the provisions of this Agreement but shall not materially alter the use of the service or reduce the level of protection provided to the Town at the time of the execution of this Agreement. Except as provided in the preceding sentence, notwithstanding anything in this Agreement to the contrary, any change to this Agreement made by Bidder that is not in writing and that is not properly executed by the signatures of authorized representatives of the parties hereto, including attestation by The Town's Clerk and approved as to form by the Town Attorney are subject to the terms and conditions of this Agreement.

15. Changes to Terms: Except as provided in Paragraph No. 13 above pertaining to Bidder's Privacy Policy, Bidder shall provide The Town written notice, sent in care of Town Attorney's Office, Smyrna, Tennessee, 315 South Lowry Street, Tennessee 37167, of any proposed change to this Agreement at least ninety (90) days prior to being effective to The Town. The Town shall have thirty (30) days after receiving the written notice to terminate this Agreement, and such cancellation shall not be a breach of this Agreement. Bidder will refund to The Town any payment made by The Town to Bidder equal to the difference between the number of months the payment was intended for and the number of months remaining on this Agreement that the fee was intended to cover.

16. Price Assurance: Unless specifically stated in this Agreement or other bid documents, the bid price shall be valid for the full term of this Agreement. If the Bidder, specifically states that he, she or it cannot honor the bid price for the full term of this Agreement; then this Agreement is voidable at the sole discretion of the Town, if at any time during the full term of this Agreement, Bidder requests to raise the bid

price. If the Town elects to void this Agreement, at its sole discretion, it shall not be deemed to be a breach of the contract by either party.

17. Confidentiality. The Town, as a Tennessee Municipal Corporation is subject to the Tennessee Open Records Act, set out in T.C.A. §10-7-503 et seq; therefore, this Agreement and all documents or materials, in any format, including, but not limited to paper, electronic or virtual, that are public records pursuant to law, are not confidential and are subject to disclosure. The Town will respond to all proper Open Records Requests in the time allowed by law, without any requirement to disclose such request to Bidder or provide Bidder with notice or the time to obtain a protective order. The Town does not have the burden of establishing that information is not confidential information or that its release is authorized to release the records. This section 16 serves to meet such burden and authorization of disclosure.

18. Mediation. The Town may, at its option, require the attempted resolution of any dispute arising under this Agreement by mediation prior to the filing of any lawsuit or other claim. Should any dispute arise, Bidder shall provide the Town notice of any intent to file suit by certified mail. The Town shall notify the Bidder of its intent to exercise its right to mediation within thirty (30) days of receiving such notice. If the Town does not exercise its right to mediation, Bidder may file suit. Any mediator selected under this clause shall be agreed upon by the parties and the costs of such mediation shall be divided and paid equally between the parties.

19. No Presumption Against Drafter: The parties are both business entities having substantial experience with the subject matter of this Agreement, and each has fully participated in the negotiation and drafting of this Agreement. Accordingly, this Agreement shall be construed without regard to the rule that ambiguities in a document are to be construed against the draftsman. No inferences shall be drawn from the fact that the final, duly executed Agreement differs in any respect from any previous draft hereof.

20. Governing Law. This Agreement shall be deemed to have been executed and delivered within the State of Tennessee, and the rights and obligations of the parties shall be construed and enforced in accordance with, and governed by, the laws of the State of Tennessee. The parties agree that all obligations of the parties are performable in Smyrna, Tennessee.

21. Choice of Forum and Venue. The parties' choice of forum and venue shall be exclusively in the courts of Rutherford County, Tennessee or the United States District Court, for the Middle District of Tennessee. The parties hereby waive their right to a jury trial. Any provision of the Agreement held to violate a law or regulation shall be deemed void, and all remaining provisions shall continue in force.

IN WITNESS WHEREOF, the undersigned have executed this Agreement as of the date set forth above.

TOWN OF SMYRNA, TENNESSEE

By: _____
Name: Mary Esther Reed
Title: Mayor

ATTEST:

_____
Amber Hobbs, Town Clerk

BIDDER:

By: _____
Title: Brand Operations Manager

ATTEST:

_____

SECTION III - SPECIFICATIONS COMPLIANCE

Unless otherwise noted, all quotations for the annual gas, water and sewer materials shall be in complete accordance with the specifications detailed herein.

Bidders shall note in the space provided below any exceptions or deviations in any way from the specifications of any section of this ISQ. Bidders should provide complete detail of exceptions or deviations.

Proposal Exceptions

Section	Brief Description

By signature below, vendor acknowledges any quotation to be in full compliance with all aspects of each section of the ISQ not noted above. The undersigned hereby declares that no person or party other than the undersigned has any interest whatever in this proposal, that it is without any connection or collusion with any person or persons making or having made any proposal for the same work and without any previous understanding with such person or persons as to relative prices, obviating competition, and that it is made in good faith.

Fortiline waterworks
COMPANY

(615) 627-4815
TELEPHONE NUMBER

Grayson Hubbuch
REPRESENTATIVE NAME

Brand Operations Manager
REPRESENTATIVE TITLE

SIGNATURE

Grayson.Hubbuch@fortiline.com
E-MAIL ADDRESS

Attachment A

Cutoffs

DESCRIPTION	Estimated Bid Qty	Vendor A Unit Price	Cost	Vendor B Unit Price	Cost	Vendor C Unit Price	Cost
3/4" STOPCOCK; JOMAR 241-004B	150	$12.00	$1,800.00	$9.00	$1,350.00	$1.00	$150.00
3/4" STOPCOCK, HIGH PRESSURE, MUELLER	20	$18.00	$360.00	$17.00	$340.00	$2.00	$40.00
1" STOPCOCK; JOMAR 241-005B	30	$13.75	$412.50	$13.00	$390.00	$3.00	$90.00
1 1/4" STOPCOCK; 175 MAOP MUELLER	10	$14.50	$145.00	$16.00	$160.00	$4.00	$40.00
1 1/2" STOPCOCK; 175 MAOP MUELLER	10	$15.00	$150.00	$14.00	$140.00	No Bid	$0.00
2" STOPCOCK; 175 MAOP MUELLER	30	$16.00	$480.00	$20.00	$600.00	$6.00	$180.00
	Totals		$3,347.50		$2,980.00		$500.00
	Low Bidder						
	Incomplete Bid						

Category Calculation Guidelines:

1. Multiply estimated quantity times bid unit price for cost of each category item
2. Add costs in category for each vendor to obtain category total cost per vendor
3. Any unit price omitted from category will result in incomplete bid for given category
4. Low bidder, meeting all other requirements, shall be awarded the entire category

SEWER MATERIAL BID LIST 2025-2026

		Smyrna							
		S = SEWER							
S	ITEM #	DESCRIPTION	SIZE	APPROVED PART #	ALTERNATE PART #	UNIT	EST. QTY. FY 26/27	BIDDER	UNIT PRICE
		RECLAIMED: METER BOXES and ACCESSORIES							
S	51	36H COMCRETE BOX METER BOX BODY ONLY		36H			6	Fortiline Waterworks	30.25 EA
S	52	CI LID "SEWER" FOR 36H BOX		36T CI LID SEWER			6	Fortiline Waterworks	38.25 EA
S	53	RECLAIMED WATER SQUARE VALVE BOX CASTING & LID		JBS 8006		EA	4	Fortiline Waterworks	250.55 EA
S	54	SEWER SQUARE CLEANOUT CASTING & LID		JBS 8006		EA	6	Fortiline Waterworks	197.85 ea
S	ITEM #	DESCRIPTION	SIZE	APPROVED PART #	ALTERNATE PART #	UNIT	EST. QTY. FY 26/27	BIDDER	UNIT PRICE
		MANHOLES							
S	58	MANHOLE CASTING/LID; JBS WATER TIGHT W/ T BAR	26"	JBS 1123		EA	2	Fortiline Waterworks	1040.85 EA
S	59	MANHOLE CASTING/LID; JBS	26"	JBS 1150		EA	2	Fortiline Waterworks	436.55 EA
S	61	CONCRETE MANHOLE RISER	4"			EA	5	Fortiline Waterworks	80.65 EA
S	62	CONCRETE MANHOLE RISER	6"			EA	5	Fortiline Waterworks	80.65 EA
S	63	CONCRETE MANHOLE RISER	12"			EA	5	N/A	
S	64	MANHOLE RISER RING SOLID-CAST IRON	24"x1.5"			EA	5	Fortiline Waterworks	223.65 EA
S	65	MANHOLE RISER RING SOLID-CAST IRON	26" x1.5"			EA	5	Fortiline Waterworks	129.05 EA
S	ITEM #	DESCRIPTION	SIZE	APPROVED PART #	ALTERNATE PART #	UNIT	EST. QTY. FY 26/27	BIDDER	UNIT PRICE
		PIPE							
s	71	CTS ROLL REUSE PIPE (500' ROLLS) (PURPLE)	1"			FT	500	Fortiline Waterworks	1.75 F/T
s	72	CTS ROLL REUSE PIPE (500' ROLLS) (PURPLE)	2"			FT	500	Fortiline Waterworks	10.75F/T
S	73	SEWER PIPE SCH 40	4"			FT	200	N/A	
S	74	C-900 REUSE WATER PIPE	4"			FT	50	N/A	
S	75	C-900 PURPLE PIPE	6"			FT	40	N/A	
S	77	SDR 21 SEWER PIPE	6"			FT	100	N/A	
S	78	SDR 26 SEWER PIPE	6"			FT	100	N/A	
S	80	CL 350 DUCTILE IRON SEWER PIPE W/ PROTECTO 401 LINING OR APPROVED EQUAL	8"			FT	50	N/A	
S	81	C900 REUSE WATER PIPE	8"			FT	40	N/A	
S	82	SDR 21 SEWER PIPE	8"			FT	100	N/A	
S	83	SDR 26 SEWER PIPE	8"			FT	100	N/A	
S	84	SDR 35 SEWER PIPE	8"			FT	20	N/A	
S	85	SDR 35 SEWER PIPE	10"			FT	20	N/A	
S	86	C900 REUSE WATER PIPE	12"			FT	20	N/A	
S	87	SDR 26 SEWER PIPE	12"			FT	100	N/A	
S	88	SDR11 IPS HDPE PIPE (RE-USE)	6"			FT	20	N/A	
S	89	SDR11 IPS HDPE PIPE (RE-USE)	8"			FT	20	N/A	
S	92	SDR 26 SEWER PIPE	15"			EA	20	N/A	
S	93	CL 350 DUCTILE IRON SEWER PIPE W/ PROTECTO 401 LINING OR APPROVED EQUAL	20"			EA	20	N/A	

SEWER MATERIAL BID LIST 2025-2026

S	ITEM #	DESCRIPTION	SIZE	APPROVED PART #	ALTERNATE PART #	UNIT	EST. QTY. FY 26/27	BIDDER	UNIT PRICE
		REPAIR CLAMPS							
S	96	SEWER REPAIR CLAMP;JCM	8" x 12" LONG (8.20-8.60)	101-0840-12		EA	2	Fortiline Waterworks	201.10 EA
S	97	SEWER REPAIR CLAMP; ROMAC	12" (12.10 - 12.50)	171-125012000		EA	2	Fortiline Waterworks	269.15 EA
S	ITEM #	DESCRIPTION	SIZE	APPROVED PART #	ALTERNATE PART #	UNIT	EST. QTY. FY 26/27	BIDDER	UNIT PRICE
		TAPPING SADDLES							
S	102	ROMAC SEWER TAPPING SADDLE	(8.00-14.40)	218-66640		EA	2	Fortiline Waterworks	$193.90
S	ITEM #	DESCRIPTION	SIZE	APPROVED PART #	ALTERNATE PART #	UNIT	EST. QTY. FY 26/27	BIDDER	UNIT PRICE
		FITTINGS							
S	110	BRASS CLEAN-OUT CAP; MATCO-NORCA	4"	10082647091488		EA	15	N/A	
S	111	PLASTIC CLEAN-OUT CAP	4"			EA	10	Fortiline Waterworks	14.59 EA
S	112	GLUE FEMALE ADAPTOR; MULTI FITTINGS	4"			EA	15	Fortiline Waterworks	11.05 EA
S	114	GLUE LONG SWEEP TEE WYE; CHARLOTTE	4"	6 11 942 03564 9		EA	10	Fortiline Waterworks	35.19 EA
S	115	GLUE 45° FEMALE COUPLING; LASCO	4"	10 02552871829 6		EA	5	Fortiline Waterworks	9.95 EA
S	116	GLUE COUPLING; GPK	4"			EA	10	Fortiline Waterworks	6.70 EA
S	117	GLUE 22° FEMALE COUPLING; LASCO	4"			EA	5	Fortiline Waterworks	15.55 EA
S	119	QUICK CAP	6"			EA	2	Fortiline Waterworks	9.15 EA
S	120	GLUE FEMALE ADAPTOR	6"			EA	15	Fortiline Waterworks	34.85 EA
S	122	BRASS CLEAN-OUT CAP; MATCO-NORCA	6"			EA	20	Fortiline Waterworks	18.45 EA
S	123	PLASTIC CLEAN-OUT CAP	6"			EA	2	Fortiline Waterworks	28.95 EA
S	124	GLUE COUPLING; GPK	6"			EA	6	Fortiline Waterworks	27.60 EA
S	125	GLUE 45° WYE; MULTI FITTINGS	6"	22454 40306		EA	15	Fortiline Waterworks	77.80 EA
S	126	GLUE 22° FEMALE COUPLING; MULTI FITTINGS	6"	22434 40969		EA	5	Fortiline Waterworks	71.95 EA
S	127	GLUE 22° MALE/FEMALE COUPLING; GPK	6"			EA	5	Fortiline Waterworks	69.70 EA
S	128	GLUE 45° MALE/FEMALE COUPLING; MULTI FITTINGS	6"	22454 40406		EA	10	Fortiline Waterworks	46.00 EA
S	129	GLUE 45 DEGREE/FEMALE COUPLING; MULTI FITTINGS	6"	22454 40506		EA	5	Fortiline Waterworks	46.00 EA
S	130	SPIGOT x HUB SDR 35 x SCH 40	6" X 4"			EA	5	Fortiline Waterworks	29.95 EA
S	ITEM #	DESCRIPTION	SIZE	APPROVED PART #	ALTERNATE PART #	UNIT	EST. QTY. FY 26/27	BIDDER	UNIT PRICE
		GASKET COUPLINGS							
S	135	GASKET COUPLING; MULTI FITTINGS	6"			EA	2	Fortiline Waterworks	35.75 EA
S	136	GASKET 22° COUPLING; HARCO	6"			EA	2	Fortiline Waterworks	28.55 EA
S	137	GASKET 45° COUPLING; HARCO	6"			EA	2	Fortiline Waterworks	29.45 EA
S	138	GASKET 45° MALE/FEMALE; MULTI FITTINGS	6"			EA	2	Fortiline Waterworks	26.05 EA
S	139	GASKET COUPLING; GPK	8"			EA	2	Fortiline Waterworks	60.75 EA
S	142	WYE GASKET	8" X 6"			EA	2	Fortiline Waterworks	90.19 EA
S	144	GASKET COUPLING; GPK	10"			EA	2	Fortiline Waterworks	134.80 EA
S	145	GASKET COUPLING; GPK	12"	106-0012		EA	2	Fortiline Waterworks	195.89 EA
S	147	GASKET COUPLING; IPEX	15"	043637		EA	2	Fortiline Waterworks	405.25 EA

SEWER MATERIAL BID LIST 2025-2026

S	ITEM #	DESCRIPTION	SIZE	APPROVED PART #	ALTERNATE PART #	UNIT	EST. QTY. FY 26/27	BIDDER	UNIT PRICE
		FERNCOS							
S	152	COUPLING; FERNCO	4" CI/PVC X 4" CI/PVC	1056-44		EA	15	Fortiline Waterworks	5.05 EA
S	153	COUPLING; FERNCO	4" CONC X 4" CI/PVC	1006-44		EA	6	Fortiline Waterworks	5.45 EA
S	154	COUPLING; FERNCO	4" CLAY X 4" PVC	1002-44		EA	6	Fortiline Waterworks	5.05 EA
S	155	COUPLING; FERNCO	6" CLAY X 4" PVC	1001-64		EA	6	N/A	
S	156	COUPLING; FERNCO	6" CI/PVC X 4" CI/PVC	1056-64		EA	6	Fortiline Waterworks	12.65 EA
S	157	COUPLING; FERNCO	6" CONC X 6" CI/PVC	1006-66		EA	6	Fortiline Waterworks	11.89 EA
S	158	COUPLING; FERNCO	6" CLAY X 6" PVC	1002-66		EA	6	Fortiline Waterworks	10.75 EA
S	159	COUPLING; FERNCO	6" CLAY X 6' CLAY	1001-66		EA	6	Fortiline Waterworks	11.60 EA
S	160	COUPLING;FERNCO	6" CI/PVC X 6" CI/PVC	1056-66		EA	8	fortiline Waterworks	10.75 EA
S	161	COUPLING; FERNCO	6" AC or DI X 6" CI or PVC	1051-66		EA	2	Fortiline Waterworks	11.60 EA
S	162	COUPLING; FERNCO	8" CI/PVC X 6" CI/PVC	1056-86		EA	2	Fortiline Waterworks	19.99 EA
S	163	COUPLING; FERNCO	8" CI X 8" CI	1056-84		EA	2	N/A	
S	164	COUPLING; FERNCO	8" CONC X 8" CI/PVC	1006-68		EA	2	N/A	
S	165	COUPLING; FERNCO	8" CLAY X 8" PVC	1002-88		EA	2	Fortiline Waterworks	16.55 EA
S	166	COUPLING; FERNCO	10" CI/PVC X 10" CI/PVC	1056-1010		EA	2	Fortiline Waterworks	24.85 EA
S	167	COUPLING; FERNCO	10" CLAY X 10" CI/PVC	1004-88		EA	2	N/A	
S	168	COUPLING; FERNCO	10" CONC X 10" CI/PVC	1055-1010		EA	2	N/A	
S	169	COUPLING; FERNCO	12" CI/PVC X 12" CI/PVC	1056-1212		EA	2	Fortiline Waterworks	28.99 EA
S	170	COUPLING; FERNCO	12" CLAY X 12" CI/PVC	1002-1212		EA	2	Fortiline Waterworks	28.99 EA
S	171	COUPLING;FERNCO	12" CONC X 12" PVC	1006-1212		EA	2	Fortiline Waterworks	28.99 EA
S	172	COUPLING;FERNCO	15" CLAY X 15" PVC	1002-1515		EA	2	Fortiline Waterworks	45.55 EA

QUOTE

FORTILINE WATERWORKS

CUSTOMER NO	QUOTING BRANCH	QUOTE NO	QUOTE DATE	PAGE
217059	FORTILINE NASHVILLE	6859207	5/18/26	1

CUSTOMER

TOWN OF SMYRNA
315 SOUTH LOWRY STREET
SMYRNA, TN 37167

PROJECT INFORMATION

43-SEWER MATERIALS BID LIST 26-27

LINE	QTY	UOM	DESCRIPTION	UNIT PRICE	TOTAL PRICE
			********** IF, AFTER THE DATE OF THIS QUOTE, ANY NEW OR INCREASED TARIFFS, DUTIES OR OTHER GOVERNMENT-IMPOSED COSTS ON MATERIALS USED IN THE WORK BECOMES EFFECTIVE, THE CONTRACT PRICE SHALL BE ADJUSTED TO REFLECT THE ACTUAL INCREASED COST TO FORTILINE. FORTILINE SHALL PROMPTLY NOTIFY THE CUSTOMER OF ANY SUCH COST IMPACT. FAILURE OF FORTILINE AND THE CUSTOMER TO AGREE ON ANY PRICE ADJUSTMENT SHALL NOT RELIEVE THE CUSTOMER'S OBLIGATION TO PAY THE INCREASED COST. **********		
			PRICES ARE GOOD FROM JULY 1, 2026 UNTIL JUNE 30, 2027		
			RECLAIMED: METER BOXES & ASSY:		
80	6	EA	36H CONC MB BODY ONLY	30.2500	181.50
90	6	EA	T58 CI LID FOR 36H SEWER	38.2500	229.50
100	6	EA	8006 VALVE BOX M/RECLAIM WATER	250.5500	1,503.30
110	6	EA	JBS 8006 VALVE BOX M/SEWER	197.8500	1,187.10
			Package Sub-total:		**3,101.40**
			MANHOLES:		
140	2	EA	1123 WT LOCKING BAR W/BOLT	1,040.8500	2,081.70
150	2	EA	1150 R&C M/SEWER	436.5500	873.10
160	5	EA	4" GRADE RING 27"OPENING XYPEX	80.6500	403.25
170	5	EA	6" GRADE RING 27"OPENING XYPEX	80.6500	403.25
180	5	EA	JBS1110 1-1/2" EXT RING	223.6500	1,118.25
190	5	EA	1-1/2" 1150 MH RISER RING	129.0500	645.25
			Package Sub-total:		**5,524.80**

ALL STOCK DELIVERIES ARE SUBJECT TO SHIPPING CHARGES

All PVC and HDPE material is quoted for shipment within 7 days of quote/bid date. All other material is quoted for shipment within 30 days of quote/bid date. After 7 days for PVC and HDPE or 30 days for all other material, ALL quoted prices are subject to review based on current market conditions.

CUSTOMER NO	JOB NAME	QUOTE NO	QUOTE DATE	PAGE
217059	43-SEWER MATERIALS BID LIST 26-27	6859207	5/18/26	2

LINE	QTY	UOM	DESCRIPTION	UNIT PRICE	TOTAL PRICE
			PIPE:		
220	500	EA	1"X500' CTS PURPLE PE TUBING	1.7500	875.00
230	500	EA	2"X500' CTS PURPLE PE TUBING	10.7500	5,375.00
			REPAIR CLAMPS		
260	2	EA	8X15 101 REP CLAMP 8.20-8.60 101-0840-15 JCM	201.1000	402.20
270	2	EA	12X12 CL1 REP CLMP 12.10-12.50 ROMAC CL1-1250X12	269.1500	538.30
			Package Sub-total:		**940.50**
			TAPPING SADDLES:		
300	2	EA	6" CB SEWER SDL UNIV BRANCH F/8.00-14.40 PIPE CB-666UN	193.9000	387.80
			Package Sub-total:		**387.80**
			FITTINGS:		
340	10	EA	4" SCH40 DWV CAP	14.5900	145.90
350	15	EA	4" SCH40 DWV CO ADPT HXF	11.0500	165.75
360	10	EA	4" SCH40 DWV COMBO WYE HXH	35.1900	351.90
370	5	EA	4" SCH40 DWV 45 HXH	9.9500	49.75
380	10	EA	4" SCH40 DWV CPLG HXH	6.7000	67.00
390	5	EA	4" SCH40 DWV 22-1/2 HXH	15.5500	77.75
400	2	EA	6" POLY PLUG W/PULLING EYE	9.1500	18.30
410	15	EA	6" SCH40 DWV CO ADPT HXF	34.8500	522.75
420	20	EA	6" SCH40 DWV CO PLUG RH	18.4500	369.00
430	2	EA	6" SCH40 DWV CAP	28.9500	57.90
440	6	EA	6" SCH40 DWV CPLG HXH	27.6000	165.60
450	15	EA	6" SCH40 DWV WYE HXH	77.8000	1,167.00
460	5	EA	6" SCH40 DWV 22-1/2 HXH	71.9500	359.75
470	5	EA	6" SCH40 DWV 22-1/2 HXS	69.7000	348.50
480	10	EA	6" SCH40 DWV STREET 45 SXH	46.0000	460.00
490	5	EA	6" SCH40 DWV 45 HXH	46.0000	230.00
500	5	EA	6"X4" SDR35XSCH40 PVC ADPT SXH	29.9500	149.75
			GASKET COUPLINGS:		
530	2	EA	6" SDR35 PVC REPAIR CPLG GXG	35.7500	71.50
540	2	EA	6" SDR35 PVC 22-1/2 GXG	28.5500	57.10
550	2	EA	6" SDR35 PVC 45 GXG	29.4500	58.90
560	2	EA	6" SDR35 PVC 45 GXS	26.0500	52.10
570	2	EA	8" SDR35 PVC REPAIR CPLG GXG	60.7500	121.50
580	2	EA	8"X6" SDR35 PVC WYE GXG	90.1900	180.38
590	2	EA	10" SDR35 PVC REPAIR CPLG GXG	134.8000	269.60
600	2	EA	12" SDR35 PVC REPAIR CPLG GXG	195.8900	391.78
610	2	EA	15" SDR35 PVC REPAIR CPLG GXG	405.2500	810.50
			FERNCOS		
640	15	EA	4" CPLG CI/PVCXCI/PVC 56-44	5.0500	75.75
650	6	EA	4" FLEX CPLG CONCXCI/PVC 06-44	5.4500	32.70
660	6	EA	4" FLEX CPLG CLAYXCI/PVC 02-44	5.0500	30.30
670	6	EA	6"X4" CPLG CI/PVCXCI/PVC 56-64	12.6500	75.90
680	6	EA	6" FLEX CPLG CONCXCI/PVC 06-66	11.8900	71.34
690	6	EA	6" FLEX CPLG CLAYXCI/PVC 02-66	10.7500	64.50
700	6	EA	6" FLEX CPLG CLAYXCLAY 01-66	11.6000	69.60
710	8	EA	6" CPLG CI/PVCXCI/PVC 56-66	10.7500	86.00
720	2	EA	6 FLEX CPLG AC/DIXCI/PVC 51-66	11.6000	23.20
730	2	EA	8"X6" CPLG CI/PVCXCI/PVC 56-86	19.9900	39.98

ALL STOCK DELIVERIES ARE SUBJECT TO SHIPPING CHARGES

All PVC and HDPE material is quoted for shipment within 7 days of quote/bid date. All other material is quoted for shipment within 30 days of quote/bid date. After 7 days for PVC and HDPE or 30 days for all other material, ALL quoted prices are subject to review based on current market conditions.

CUSTOMER NO	JOB NAME	QUOTE NO	QUOTE DATE	PAGE
217059	43-SEWER MATERIALS BID LIST 26-27	6859207	5/18/26	3

LINE	QTY	UOM	DESCRIPTION	UNIT PRICE	TOTAL PRICE
740	2	EA	8" FLEX CPLG CLAYXCI/PVC 02-88	16.5500	33.10
750	2	EA	10" CPLG CI/PVCXCI/PVC 56-1010	24.8500	49.70
760	2	EA	12" CPLG CI/PVCXCI/PVC 56-1212	28.9900	57.98
770	2	EA	12" CPLG CLAYXCI/PVC 02-1212	28.9900	57.98
780	2	EA	12" CPLG CONCXCI/PVC 06-1212	28.9900	57.98
790	2	EA	15" CPLG CLAYXCI/PVC 02-1515	45.5500	91.10
				Subtotal:	23,841.57
				Tax:	.00
				Bid Total:	23,841.57

ALL STOCK DELIVERIES ARE SUBJECT TO SHIPPING CHARGES

All PVC and HDPE material is quoted for shipment within 7 days of quote/bid date. All other material is quoted for shipment within 30 days of quote/bid date.

After 7 days for PVC and HDPE or 30 days for all other material, ALL quoted prices are subject to review based on current market conditions.

Ent By GTH 5/19/26 12:50:53

LEGAL NOTICE

INVITATION TO SUBMIT QUOTATIONS

The Town of Smyrna will accept quotations on the annual Gas, Water and Sewer materials for the Utilities Department. Bidders shall submit sealed quotations in the format specified in the Invitation to Submit Quotations no later than **2:00 p.m. May 19, 2026** at which time the bids will be publicly opened and read aloud. No bid may be withdrawn after the scheduled closing time for a period of 90 days. Bidding documents may be obtained at Smyrna Town Hall during regular business hours or www.townofsmyrna.org. Quotations should be mailed or hand delivered to:

Purchasing Department
Smyrna Town Hall
Sealed Bid on Annual Gas, Water & Sewer Materials
May 19 @ 2:00 p.m.
315 South Lowry Street
Smyrna, TN 37167

The Town of Smyrna will not discriminate in the purchase of all goods and services on the basis of race, color, religion, sex, national origin, age, disability or any other lawfully protected classification.

Verbal quotations, faxed quotations or quotations received after the closing date will not be accepted. The Town of Smyrna reserves the right to reject any and all bids, to waive technicalities or informalities and to accept any bid deemed to be in the best interest of the Town.

BY: Sierra Lowry
Finance Director

TO BE RUN: May 5, 2026

G & C Supply Co., Inc.
Water, Sewer, & Gas Supplies
Signs and Safety Products

1105 State Route 77
PO Drawer 459
Atwood, TN 38220
(731)662-7193 (800) 238-3836
FAX (731)662-7219

COMPANY NAME

TABLE OF CONTENTS

		PAGE
SECTION I -	GENERAL INFORMATION	3
SECTION II -	SPECIFICATIONS AND PRICE QUOTATION	5
	INSURANCE REQUIREMENTS	6
	AGREEMENT	10
SECTION III –	SPECIFICATION COMPLIANCE	16
	ATTACHMENT A	17

SPREADSHEETS & DRAWINGS

SECTION I – GENERAL INFORMATION

A. The Town of Smyrna desires to purchase annual gas, water and sewer materials for the Utilities Department for the fiscal year July 1, 2026 through June 30, 2027.

Location of Smyrna Town Hall:
315 South Lowry Street
Smyrna, TN 37167

Delivery Locations:
Gas: 108 G Street, Smyrna
Water & Sewer: 106 G Street, Smyrna
Call for delivery appointment.

B. Questions should be directed to Kevin Scott 615-479-4895. Email address: kevin.scott@townofsmyrna.org.

C. The Town of Smyrna reserves the right to reject any and all bids, to waive technicalities or informalities and to accept any bid deemed to be in the best interest of the Town. No bid may be withdrawn after the scheduled closing time for a period of 90 days.

D. The bidder shall abide by and comply with the true intent of the specifications and not take advantage of any unintentional error or omission, but shall fully address the full intent and meaning of each aspect of the specifications.

E. **Equals must be pre-approved by Kevin Scott prior to bid opening. All items to be ordered as needed**. Quantities are **estimated** on annual usage.

F. All materials in the bid documents have been placed into specific categories within each department. Each category shall be considered as a whole and not broken apart (See example in Attachment A).

G. Section II, III and contract Agreement shall be **completed** and **included** as an integral part of each bidder's proposal. Successful bidder will be expected to enter into a contract Agreement with the Town. Agreement shall be signed, but not dated, by the proper business representative and submitted **with** the bid proposal. An executed contract will be forwarded to winning vendor after Council approval.

H. Freight shall be paid by vendor and should be included in unit price bid.

I. The Town is a tax-exempt organization.

J. Mail is delivered after 11:00 a.m. Monday through Friday.

K. Bid quotations **must** be submitted on the Town's quotation page(s). No exceptions.

L. THIS ORDER WILL EXPIRE JUNE 30, 2027.

M. By submission of this bid, each bidder/proposer and each person signing on behalf of any bidder certifies, and in the case of a joint bid each party thereto certifies as to its own organization, under penalty of perjury, that to the best of its knowledge and belief that each bidder is not on the list created pursuant to T.C.A. § 12-12-106 Iran

Divestment Act. For reference purposes, the list is currently available online at: State of TN_Debarred_Vendors.pdf

SECTION II – SPECIFICATIONS AND PRICE QUOTATION

Base Bid Schedule

See Attached Spreadsheets

All materials have been placed into specific categories within each department. Each category shall be considered as a whole and not broken apart. An example of the format is included in Attachment A.

The Town of Smyrna has included a spreadsheet with this document. The spreadsheet has been included for bidding convenience. Each bidder is responsible for the information and mathematical accuracy. Please check and double check your bid prior to submitting.

ESTIMATED DELIVERY TIME MUST BE INCLUDED FOR ITEMS.

Compliance with laws:

The contractor must comply with all applicable federal and state law including the prevailing wage laws.

Contractor must provide adequate proof of insurance with the bid.

INSURANCE REQUIREMENTS

The Vendor shall purchase and maintain for the duration of the contract insurance against claims for injuries to persons or damages to property which may arise from or in connection with the performance of the work hereunder by the Vendor, its agents, representatives, employees or subcontractors.

A. MINIMUM SCOPE AND LIMITS OF INSURANCE

1. **Workers Compensation**
   Workers Compensation insurance shall be in compliance with the State of Tennessee and shall be statutory. Employers Liability shall be included with a minimum limit of $500,000 per accident/per disease/per employee.

2. **Commercial General Liability**
   Commercial General Liability insurance shall have a minimum limit per occurrence of $1,000,000 and a minimum general aggregate of $2,000,000. It shall include completed operations, product liability and personal injury liability insurance.

3. **Automobile Liability**
   Automobile Liability Insurance shall have a minimum combined single limit per occurrence of $1,000,000. This insurance shall include third-party bodily injury and property damage liability for owned, hired, borrowed and non-owned automobiles.

B. DEDUCTIBLES AND SELF-INSURED RETENTIONS

Any deductibles or self-insured retentions must be declared to the Town of Smyrna. The Vendor shall be responsible for all deductibles and self-insured retentions.

C. OTHER INSURANCE PROVISIONS

The policies are to contain, or be endorsed to contain, the following provisions:

1. General Liability and Automobile Liability Coverages

   a. The Town, its elected and appointed officials, agents, employees and volunteers shall be named as an additional insured as regards negligence by the vendor.

   b. The Vendor's insurance shall be primary as respects the Town, its elected and appointed officials, agents, employees and volunteers. Any insurance or

self-insurance maintained by the Town of Smyrna shall be excess and non-contributory of the Vendor's insurance.

2. Workers Compensation and Employers Liability Coverage

   The insurer shall agree to waive all rights of subrogation against the Town, its elected and appointed officials, agents, employees and volunteers for losses arising from work performed by the Vendor for the Town of Smyrna.

3. All Coverages

   a. Coverage shall not be canceled, suspended, or voided by either party (the Vendor or the insurer) or reduced in coverage or in limits except after 30 days written notice has been given to the Town of Smyrna. Ten-day written notice of cancellation is acceptable for non-payment of premium. Notifications shall comply with the standard cancellation provisions in the Vendor's policy.

   b. Neither the acceptance of the completed work nor the payment thereof shall release the Vendor from the obligations of the insurance requirements or indemnification agreement.
   c. The insurance companies issuing the policies shall have no recourse against the Town of Smyrna for payment of premiums or for assessments under any form of the policies.

   d. Replacement certificates, policies or endorsements shall be provided to the Town for any such insurance expiring prior to the completion of services.

   e. Any failure of the Vendor to comply with reporting provisions of the policy shall not affect coverage provided to the Town, its elected and appointed officials, agents, employees and volunteers.

D. ACCEPTABILITY OF INSURERS

All required insurance shall be provided by a company or companies licensed to conduct business in the State of Tennessee. Insurance shall be underwritten by insurers with an A.M. Best Company ratings no less than an A.

E. VERIFICATION OF COVERAGE

The Vendor shall furnish the Town with Certificates of Insurance reflecting proof of required coverage. The Certificates for each insurance policy are to be signed by a person authorized by that insurer to bind coverage on its behalf. **The Certificates are to be received and approved by the Town before work commences and upon any contract renewal thereafter.**

Upon failure of the Vendor to furnish, deliver and maintain such insurance as requested, this contract, at the election of the Town, may be suspended, discontinued or terminated. Failure of the Vendor to purchase and/or maintain any required insurance shall not relieve the Vendor from any liability or indemnification under the contract.

The Certificate of Insurance naming the "Town of Smyrna" as **Additional Insured** shall be addressed to the attention of:

Town of Smyrna
Department of Safety & Risk Management
ATTN: Henry Urbina
315 S Lowry St
Smyrna, TN 37167

It can also be submitted electronically to henry.urbina@townofsmyrna.org. The subject line has to indicate the name of the project.

The Town reserves the right to request complete certified copies of all required insurance policies at any time.

F. SUBCONTRACTORS

Vendor shall include all subcontractors as insureds under its policies **OR** shall be responsible for verifying and maintaining the Certificates provided by each subcontractor. Subcontractors shall be subject to all of the requirements stated herein. The Town of Smyrna reserves the right to request copies of subcontractor's Certificates at any time.

G. WORKERS' COMPENSATION INDEMNITY

In the event Vendor is not required to provide or is exempt from providing workers' compensation coverage, the parties hereby agree that Vendor, its owners, agents and employees will have no cause of action against, and will not assert a claim against the Town of Smyrna, its elected and appointed officials, agents, employees and volunteers, under any circumstances. The parties also hereby agree that the Town of Smyrna, its elected and appointed officials, agents, employees and volunteers shall in no circumstance be, or considered as, the employer or statutory employer of Vendor, its owners, agents and employees. The parties further agree that Vendor is a wholly independent vendor and is exclusively responsible for its employees, owners, and agents. Vendor hereby agrees to protect, defend, indemnify and hold the Town of Smyrna, its elected and appointed officials, agents, employees and volunteers harmless from any such assertion or claim that may arise from the performance of this contract.

HOLD HARMLESS AND INDEMNITY REQUIREMENT:

Vendor shall indemnify and hold harmless, to the maximum extent permitted by law, the Town of Smyrna and its officers, agents, employees, volunteers, from and against any and all liability, damages, losses, (whether in contract or in tort, including personal injury, accidental death or property damage, and regardless, of whether the allegations are false, fraudulent or groundless), and costs (including reasonable attorney's fees, litigation, arbitration, mediation, appeal expenses) which in whole or in part are caused by the negligence, recklessness or intentional wrongful misconduct of the Vendor and

persons employed by or utilized by the Vendor in Vendor's performance of this Agreement.

The vendor further agrees to protect, defend, and save the Town, its elected and appointed officials, agents, employees and volunteers while working in the scope of their duties as such, harmless from and against all claims, demands, and causes of action of any kind of character, including the cost of their defense, arising in favor of the vendor's employees or third parties on account of bodily or personal injuries, death or damage to property arising out of services performed or omissions of services or in any way resulting from the acts of omissions of the vendor and/or its agents, employees, subcontractors, representative of the Town under this agreement.

Pursuant to Tennessee Attorney General Opinion 93-01, the Town will not indemnify, defend or hold harmless in any fashion the Vendor from any claims arising from any failure, regardless of any language in any attachment or other document that the Vendor may provide.

APPLICABLE LAW:

Any contract resulting from this ISQ shall be governed by and construed under the laws of the State of Tennessee.

AGREEMENT

This Agreement is made and entered into as of this 13th day of May, 2026, by and between G & C Supply Co, Inc, a Municipal & Utility Supplier (the "Bidder") and the Town of Smyrna, Tennessee, a Tennessee municipal corporation (the "Town") for the purpose of 2026-2027 Annual Bid.

WHEREAS, the Bidder has submitted a quotation for the provision of certain products and/or services to the Town, all in accordance with the terms of the Invitation to Submit Quotations attached hereto and incorporated herein by reference as if set forth at length verbatim as Exhibit A (the "ISQ"), and which Proposal from the Bidder is attached hereto and incorporated herein by reference as if set forth at length verbatim as Exhibit B (the "Quotation"); the ISQ and the Quotation, together with any and all ancillary documents thereto, shall be collectively referred to herein as the "Bid Documents"; and

WHEREAS, the Town now desires to accept the Bidder's quotation, in accordance with the terms set forth in such Bid Documents.

NOW, THEREFORE, in consideration of the mutual covenants contained herein, and for other good and valuable consideration, the receipt and sufficiency of which is hereby acknowledged, the undersigned do hereby agree as follows:

1. Acceptance of Bid Documents. The terms of the Bid Documents, as incorporated herein by reference, are hereby accepted by the parties hereto. The Bidder hereby agrees to provide the goods and/or services contemplated by such Bid Documents in accordance with the terms set forth therein. The Town hereby accepts the Bidder's quotation to provide the goods and/or services contemplated by such Bid Documents in accordance with the terms set forth therein.

2. Entire Agreement. This Agreement, including the exhibits and any other documents referred to herein or therein, which form a part hereof, contains the entire understanding of the parties with respect to its subject matter. There are no restrictions, agreements, promises, warranties, covenants or undertakings other than those expressly set forth herein or therein. This Agreement supersedes all prior written or oral agreements and understandings between the parties with respect to its subject matter and may not be altered, modified or amended, in whole or in part, except by the express written authorization and consent of the parties hereto.

3. Severability. This agreement constitutes the product of negotiations of the parties hereto and any enforcement of hereof will be interpreted in a neutral manner and not more strongly against any party based upon the source of the draftsmanship of this Agreement. If any provision of this Agreement shall be held invalid or unenforceable by a court of competent jurisdiction, the remaining provisions hereof shall continue to be fully effective.

4. Limitation of Liability. The Town of Smyrna shall not be liable for any loss, claim, expense or damage caused by, contributed to or arising out of the acts or omission of Bidder or third parties, whether negligent or otherwise.

5. Warranties. The Bidder warrants to the Town that all materials and equipment furnished under this Contract will be new unless otherwise specified, and that all work will be of good quality, free from faults and defects, suitable for the purpose for which the materials and equipment are furnished, and in conformance with the Agreement. If it does not perform as warranted, Bidder shall use all commercially reasonable efforts to correct the product(s) so that it operates in all material respects in conformity with the written representations of Bidder. If Bidder cannot correct the product(s) within a reasonable period of time, Bidder shall refund the purchase price of the product(s). All work not conforming to these requirements, including substitutions not properly approved and authorized, may be considered defective.

6. Software Deadline, Testing and Acceptance: If applicable to the Agreement, software provided by Bidder shall be installed for the purposes of testing, as stated herein below, no later than one hundred twenty (120) days from the effective date of this Agreement unless the parties, in writing, set a different specific date. In Addition, software provided by Bidder to The Town is subject to inspection and testing to verify that the software conforms to its written specifications and to ensure it meets The Town's needs. The Town shall have seven (7) business days after the software is installed to perform testing of the software using The Town's data. The Town shall provide Bidder with written notice of acceptance or rejection of the software five (5) business days or less after the end of the testing period. If the Town does not provide timely written notice of acceptance or rejection to Bidder, the software shall be deemed to be accepted by The Town. If the software is rejected, The Town may, at its sole discretion, either (1) return the software and receive a refund of all fees paid with respect thereto, or (2) allow Bidder to repair or replace the software, without charge, in a timely manner. In the event The Town elects to allow the Bidder to repair or replace the software, The Town shall have an additional (7) business days in which to accept or reject the software as laid out hereinabove.

7. Use of The Town's Logo or Name: Bidder shall not use The Town's name or any logo in marketing or publicity materials or for marketing or publicity purposes without the prior written authorization from The Town. Bidder shall not issue, publish, or divulge any materials developed or used in the performance of this Agreement or make any statement to the media relating to this Agreement without the prior written consent of The Town.

8. Indemnification. The parties hereto agree that Bidder shall indemnify The Town for any and all claims of negligence, tortious conduct or otherwise unlawful acts committed by Bidder in the performance of their obligations under the terms of this agreement, including any and all attachments or exhibits thereto and Bidder agrees to pay any and all costs associated with the enforcement of the terms of this indemnity agreement by The Town, including but not limited to, court costs, civil judgments, assessments or any other reasonable fees associated therewith. This clause shall survive the expiration or termination of this Agreement and shall remain in full force and effect until the expiration of any applicable statute of limitation. In addition, Article II, Section 29 of the Tennessee Constitution prohibits municipalities from lending their credit to private of public entities and, therefore, prohibits an agreement by The Town to indemnify a third party or agree to a limitation of liability provision.

9. Non-Appropriation: Bidder acknowledges that The Town is a governmental entity, and the validity of this Agreement is based upon the availability of public funding under its authority. In the event The Town fails to appropriate funds or make monies available for any fiscal year covered by the term of this Agreement for services to be provided, this Agreement shall be terminated on the last day of the fiscal year for which funds were appropriated or monies made available for such purposes without liability to The Town, and such termination shall not be a breach of the Agreement, and any unused payment made to Bidder shall be returned to The Town.

10. Tax Exemption: As a tax-exempt entity, The Town shall not be responsible for sales or use taxes incurred for products or services. The Town shall supply Bidder with its Sales and Use Tax Exemption Certificate upon Bidder's request. Bidder shall bear the burden of providing its suppliers with a copy of The Town's tax exemption certificate and Bidder shall assume all liability for such taxes, if any, that should be incurred.

11. Attorney Fees. The parties hereto agree that The Town shall be in no event liable for any attorney's fees which Bidder may incur due to breach of this Agreement by either party; and further, The Town shall not acquiesce to any term in any document that indicates or infers The Town may or shall be responsible for the Attorney's fees of another party or the Bidder's attorney fees.

12. Boycott of Israel. The Bidder certifies that it is not currently engaged in, and covenants that it will not, for the duration of the Contract, engage in a Boycott of Israel, as that term is defined in Tenn. Code Ann. § 12-4-119.

13. Failure to perform. The parties agree, in the event Bidder fails to perform any obligation, other than with regards to the date of delivery, set out in this Agreement, the Town shall be reimbursed by Bidder for any and all expenses associated with having to obtain a new provider to finish out the contracted term, including, but in no way limited to, any charges/fees, which are above and beyond the amount the Town would have paid to Bidder to complete the same task; provided, however, that if the failure, by its nature, is one that can be cured, the Bidder shall have fifteen (15) business days after receipt of written notice from the Town to cure said failure to perform. The parties hereby agree, unless a specific date of delivery is provided in this Agreement or other bid documents, all deliveries shall be made to the Town no later than ninety (90) days from the date of order. The parties further agree that if Bidder, in good faith, is not able to meet this ninety (90) day deadline of delivery due to forces beyond his, her or its control, that were unforeseeable at the time of signing this contract, then this entire Agreement shall be voidable at the sole discretion of the Town. Should the Town elect to void this Agreement due to Bidder's good faith inability, due to forces beyond his, her or its control, and which were unforeseeable at the time of signing this Agreement to meet the delivery deadline, then neither party shall be deemed to have breached this Agreement, and Bidder shall return all monies, within seven (7) business days, paid by the Town for the products/items that could not be delivered in the allotted time.

14. Unilateral Modification of Agreement Not Permitted: Bidder may make unilateral changes to its Privacy Policy, provided any such changes are subject to the provisions of this Agreement but shall not materially alter the use of the service or reduce the level of protection provided to the Town at the time of the execution of this Agreement. Except as provided in the preceding sentence, notwithstanding anything in this Agreement to the contrary, any change to this Agreement made by Bidder that is not in writing and that is not properly executed by the signatures of authorized representatives of the parties hereto, including attestation by The Town's Clerk and approved as to form by the Town Attorney are subject to the terms and conditions of this Agreement.

15. Changes to Terms: Except as provided in Paragraph No. 13 above pertaining to Bidder's Privacy Policy, Bidder shall provide The Town written notice, sent in care of Town Attorney's Office, Smyrna, Tennessee, 315 South Lowry Street, Tennessee 37167, of any proposed change to this Agreement at least ninety (90) days prior to being effective to The Town. The Town shall have thirty (30) days after receiving the written notice to terminate this Agreement, and such cancellation shall not be a breach of this Agreement. Bidder will refund to The Town any payment made by The Town to Bidder equal to the difference between the number of months the payment was intended for and the number of months remaining on this Agreement that the fee was intended to cover.

16. Price Assurance: Unless specifically stated in this Agreement or other bid documents, the bid price shall be valid for the full term of this Agreement. If the Bidder, specifically states that he, she or it cannot honor the bid price for the full term of this Agreement; then this Agreement is voidable at the sole discretion of the Town, if at any time during the full term of this Agreement, Bidder requests to raise the bid

price. If the Town elects to void this Agreement, at its sole discretion, it shall not be deemed to be a breach of the contract by either party.

17. Confidentiality. The Town, as a Tennessee Municipal Corporation is subject to the Tennessee Open Records Act, set out in T.C.A. §10-7-503 et seq; therefore, this Agreement and all documents or materials, in any format, including, but not limited to paper, electronic or virtual, that are public records pursuant to law, are not confidential and are subject to disclosure. The Town will respond to all proper Open Records Requests in the time allowed by law, without any requirement to disclose such request to Bidder or provide Bidder with notice or the time to obtain a protective order. The Town does not have the burden of establishing that information is not confidential information or that its release is authorized to release the records. This section 16 serves to meet such burden and authorization of disclosure.

18. Mediation. The Town may, at its option, require the attempted resolution of any dispute arising under this Agreement by mediation prior to the filing of any lawsuit or other claim. Should any dispute arise, Bidder shall provide the Town notice of any intent to file suit by certified mail. The Town shall notify the Bidder of its intent to exercise its right to mediation within thirty (30) days of receiving such notice. If the Town does not exercise its right to mediation, Bidder may file suit. Any mediator selected under this clause shall be agreed upon by the parties and the costs of such mediation shall be divided and paid equally between the parties.

19. No Presumption Against Drafter: The parties are both business entities having substantial experience with the subject matter of this Agreement, and each has fully participated in the negotiation and drafting of this Agreement. Accordingly, this Agreement shall be construed without regard to the rule that ambiguities in a document are to be construed against the draftsman. No inferences shall be drawn from the fact that the final, duly executed Agreement differs in any respect from any previous draft hereof.

20. Governing Law. This Agreement shall be deemed to have been executed and delivered within the State of Tennessee, and the rights and obligations of the parties shall be construed and enforced in accordance with, and governed by, the laws of the State of Tennessee. The parties agree that all obligations of the parties are performable in Smyrna, Tennessee.

21. Choice of Forum and Venue. The parties' choice of forum and venue shall be exclusively in the courts of Rutherford County, Tennessee or the United States District Court, for the Middle District of Tennessee. The parties hereby waive their right to a jury trial. Any provision of the Agreement held to violate a law or regulation shall be deemed void, and all remaining provisions shall continue in force.

IN WITNESS WHEREOF, the undersigned have executed this Agreement as of the date set forth above.

TOWN OF SMYRNA, TENNESSEE

By: _____
Name: Mary Esther Reed
Title: Mayor

ATTEST:

_____
Amber Hobbs, Town Clerk

BIDDER:

By: Lina S Burton
Title: Secretary

ATTEST:

Linda Bryant

SECTION III - SPECIFICATIONS COMPLIANCE

Unless otherwise noted, all quotations for the annual gas, water and sewer materials shall be in complete accordance with the specifications detailed herein.

Bidders shall note in the space provided below any exceptions or deviations in any way from the specifications of any section of this ISQ. Bidders should provide complete detail of exceptions or deviations.

Proposal Exceptions

Section	Brief Description

By signature below, vendor acknowledges any quotation to be in full compliance with all aspects of each section of the ISQ not noted above. The undersigned hereby declares that no person or party other than the undersigned has any interest whatever in this proposal, that it is without any connection or collusion with any person or persons making or having made any proposal for the same work and without any previous understanding with such person or persons as to relative prices, obviating competition, and that it is made in good faith.

G + G Supply Co, Inc.
COMPANY

731-662-7193
TELEPHONE NUMBER

Antonio Williams
REPRESENTATIVE NAME

Inside Sales
REPRESENTATIVE TITLE

Antonio Willi
SIGNATURE

AWilliams@gcsupplyco.com
E-MAIL ADDRESS

SEWER MATERIAL BID LIST 2025-2026

		Smyrna							
		S = SEWER							
S	ITEM #	DESCRIPTION	SIZE	APPROVED PART #	ALTERNATE PART #	UNIT	EST. QTY. FY 26/27	BIDDER	UNIT PRICE
		RECLAIMED: METER BOXES and ACCESSORIES							
S	51	36H COMCRETE BOX METER BOX BODY ONLY		36H			6	NB	
S	52	CI LID "SEWER" FOR 36H BOX		36T CI LID SEWER			6		
S	53	RECLAIMED WATER SQUARE VALVE BOX CASTING & LID		JBS 8006		EA	4	NB	
S	54	SEWER SQUARE CLEANOUT CASTING & LID		JBS 8006		EA	6	NB	
S	ITEM #	DESCRIPTION	SIZE	APPROVED PART #	ALTERNATE PART #	UNIT	EST. QTY. FY 26/27	BIDDER	UNIT PRICE
		MANHOLES							
S	58	MANHOLE CASTING/LID; JBS WATER TIGHT W/ T BAR	26"	JBS 1123		EA	2	NB	
S	59	MANHOLE CASTING/LID; JBS	26"	JBS 1150		EA	2	NB	
S	61	CONCRETE MANHOLE RISER	4"			EA	5	NB	
S	62	CONCRETE MANHOLE RISER	6"			EA	5	NB	
S	63	CONCRETE MANHOLE RISER	12"			EA	5	NB	
S	64	MANHOLE RISER RING SOLID-CAST IRON	24"x1.5"			EA	5	NB	
S	65	MANHOLE RISER RING SOLID-CAST IRON	26" x1.5"			EA	5	NB	
S	ITEM #	DESCRIPTION	SIZE	APPROVED PART #	ALTERNATE PART #	UNIT	EST. QTY. FY 26/27	BIDDER	UNIT PRICE
		PIPE							
S	71	CTS ROLL REUSE PIPE (500' ROLLS) (PURPLE)	1"			FT	500	NB	
S	72	CTS ROLL REUSE PIPE (500' ROLLS) (PURPLE)	2"			FT	500	NB	
S	73	SEWER PIPE SCH 40	4"			FT	200	NB	
S	74	C-900 REUSE WATER PIPE	4"			FT	50	NB	
S	75	C-900 PURPLE PIPE	6"			FT	40	NB	
S	77	SDR 21 SEWER PIPE	6"			FT	100	NB	
S	78	SDR 26 SEWER PIPE	6"			FT	100	NB	
S	80	CL 350 DUCTILE IRON SEWER PIPE W/ PROTECTO 401 LINING OR APPROVED EQUAL	8"			FT	50	NB	
S	81	C900 REUSE WATER PIPE	8"			FT	40	NB	
S	82	SDR 21 SEWER PIPE	8"			FT	100	NB	
S	83	SDR 26 SEWER PIPE	8"			FT	100	NB	
S	84	SDR 35 SEWER PIPE	8"			FT	20	NB	
S	85	SDR 35 SEWER PIPE	10"			FT	20	NB	
S	86	C900 REUSE WATER PIPE	12"			FT	20	NB	
S	87	SDR 26 SEWER PIPE	12"			FT	100	NB	
S	88	SDR11 IPS HDPE PIPE (RE-USE)	6"			FT	20	NB	
S	89	SDR11 IPS HDPE PIPE (RE-USE)	8"			FT	20	NB	
S	92	SDR 26 SEWER PIPE	15"			EA	20	NB	

SEWER MATERIAL BID LIST 2025-2026

S	93	CL 350 DUCTILE IRON SEWER PIPE W/ PROTECTO 401 LINING OR APPROVED EQUAL	20"			EA	20	NB		
S	**ITEM #**	**DESCRIPTION**	**SIZE**	**APPROVED PART #**	**ALTERNATE PART #**	**UNIT**	**EST. QTY. FY 26/27**	**BIDDER**	**UNIT PRICE**	
		REPAIR CLAMPS								
S	96	SEWER REPAIR CLAMP;JCM	8" x 12" LONG (8.20-8.60)	101-0840-12		EA	2			
S	97	SEWER REPAIR CLAMP; ROMAC	12" (12.10 - 12.50)	171-125012000		EA	2	NB		
S	**ITEM #**	**DESCRIPTION**	**SIZE**	**APPROVED PART #**	**ALTERNATE PART #**	**UNIT**	**EST. QTY. FY 26/27**	**BIDDER**	**UNIT PRICE**	
		TAPPING SADDLES						G + C		
S	102	ROMAC SEWER TAPPING SADDLE	(8.00-14.40)	218-66640		EA	2		$229.08	stock
S	**ITEM #**	**DESCRIPTION**	**SIZE**	**APPROVED PART #**	**ALTERNATE PART #**	**UNIT**	**EST. QTY. FY 26/27**	**BIDDER**	**UNIT PRICE**	
		FITTINGS								
S	110	BRASS CLEAN-OUT CAP; MATCO-NORCA	4"	10082647091488		EA	15	G + C	$13.21	stock
S	111	PLASTIC CLEAN-OUT CAP	4"			EA	10		$4.59	stock
S	112	GLUE FEMALE ADAPTOR; MULTI FITTINGS	4"			EA	15		$9.10	stock
S	114	GLUE LONG SWEEP TEE WYE; CHARLOTTE	4"	6 11 942 03564 9		EA	10		$35.09	stock
S	115	GLUE 45° FEMALE COUPLING; LASCO	4"	10 02552871829 6		EA	5		$12.90	stock
S	116	GLUE COUPLING; GPK	4"			EA	10		$7.37	stock
S	117	GLUE 22° FEMALE COUPLING; LASCO	4"			EA	5		$11.61	stock
S	119	QUICK CAP	6"			EA	2		$5.80	stock
S	120	GLUE FEMALE ADAPTOR	6"			EA	15		$30.50	stock
S	122	BRASS CLEAN-OUT CAP; MATCO-NORCA *	6"			EA	20		$33.10	stock
S	123	PLASTIC CLEAN-OUT CAP	6"			EA	2		$14.91	stock
S	124	GLUE COUPLING; GPK	6"			EA	6		$24.33	stock
S	125	GLUE 45° WYE; MULTI FITTINGS	6"	22454 40306		EA	15		$83.38	stock
S	126	GLUE 22° FEMALE COUPLING; MULTI FITTINGS	6"	22434 40969		EA	5		$72.29	stock
S	127	GLUE 22° MALE/FEMALE COUPLING; GPK	6"			EA	5		$ NB	NB
S	128	GLUE 45° MALE/FEMALE COUPLING; MULTI FITTINGS	6"	22454 40406		EA	10		NB	NB
S	129	GLUE 45 DEGREE/FEMALE COUPLING; MULTI FITTINGS	6"	22454 40506		EA	5		$53.43	stock
S	130	SPIGOT x HUB SDR 35 x SCH 40	6" X 4"			EA	5		$30.39	stock
S	**ITEM #**	**DESCRIPTION**	**SIZE**	**APPROVED PART #**	**ALTERNATE PART #**	**UNIT**	**EST. QTY. FY 26/27**	**BIDDER**	**UNIT PRICE**	
		GASKET COUPLINGS						G + C		
S	135	GASKET COUPLING; MULTI FITTINGS	6"			EA	2		$38.54	stock
S	136	GASKET 22° COUPLING; HARCO	6"			EA	2		$31.74	stock
S	137	GASKET 45° COUPLING; HARCO	6"			EA	2		$32.75	stock
S	138	GASKET 45° MALE/FEMALE; MULTI FITTINGS	6"			EA	2		$30.63	stock
S	139	GASKET COUPLING; GPK	8"			EA	2		$67.08	stock
S	142	WYE GASKET	8" X 6"			EA	2		$94.79	stock
S	144	GASKET COUPLING; GPK	10"			EA	2		$154.44	stock

S	145	GASKET COUPLING; GPK	12"	106-0012		EA	2		NB
S	147	GASKET COUPLING; IPEX	15"	043637		EA	2		NB
S	ITEM #	DESCRIPTION	SIZE	APPROVED PART #	ALTERNATE PART #	UNIT	EST. QTY. FY 26/27	BIDDER	UNIT PRICE
		FERNCOS						G+C	
S	152	COUPLING; FERNCO	4" CI/PVC X 4" CI/PVC	1056-44		EA	15		$4.68 stock
S	153	COUPLING; FERNCO	4" CONC X 4" CI/PVC	1006-44		EA	6		$5.05 stock
S	154	COUPLING; FERNCO	4" CLAY X 4" PVC	1002-44		EA	6		$4.68 stock
S	155	COUPLING; FERNCO	6" CLAY X 4" PVC	1001-64		EA	6		$11.73 stock
S	156	COUPLING; FERNCO	6" CI/PVC X 4" CI/PVC	1056-64		EA	6		$11.73 stock
S	157	COUPLING; FERNCO	6" CONC X 6" CI/PVC	1006-66		EA	6		$11.06 stock
S	158	COUPLING; FERNCO	6" CLAY X 6" PVC	1002-66		EA	6		$9.99 stock
S	159	COUPLING; FERNCO	6" CLAY X 6' CLAY	1001-66		EA	6		$10.79 stock
S	160	COUPLING;FERNCO	6" CI/PVC X 6" CI/PVC	1056-66		EA	8		$9.99 stock
S	161	COUPLING; FERNCO	6" AC or DI X 6" CI or PVC	1051-66		EA	2		$10.79 stock
S	162	COUPLING; FERNCO	8" CI/PVC X 6" CI/PVC	1056-86		EA	2		$18.57 stock
S	163	COUPLING; FERNCO	8" CI X 8" CI	1056-84		EA	2		$77.65 stock
S	164	COUPLING; FERNCO	8" CONC X 8" CI/PVC	1006-68		EA	2		$74.82 stock
S	165	COUPLING; FERNCO	8" CLAY X 8" PVC	1002-88		EA	2		$15.38 stock
S	166	COUPLING; FERNCO	10" CI/PVC X 10" CI/PVC	1056-1010		EA	2		$23.09 stock
S	167	COUPLING; FERNCO	10" CLAY X 10" CI/PVC	1004-88		EA	2		$52.42 stock
S	168	COUPLING; FERNCO	10" CONC X 10" CI/PVC	1055-1010		EA	2		$23.65 2-4 Weeks
S	169	COUPLING; FERNCO	12" CI/PVC X 12" CI/PVC	1056-1212		EA	2		$26.94 stock
S	170	COUPLING; FERNCO	12" CLAY X 12" CI/PVC	1002-1212		EA	2		$26.94 stock
S	171	COUPLING;FERNCO	12" CONC X 12" PVC	1006-1212		EA	2		$26.94 stock
S	172	COUPLING;FERNCO	15" CLAY X 15" PVC	1002-1515		EA	2		$42.36 stock

DUE TO THE UNSTABLE
MARKET AND FLUCTUATING
MANUFACTURING COST, YOUR PRICE
MAY BE SUBJECT TO CHANGE
CALL 1-800-238-3836 TO
CONFIRM PRICE

WATER MATERIALS BID LIST 2025-2026

WATER	ITEM #	DESCRIPTION	SIZE	APPROVED PART #	ALTERNATE PART #	UNIT	EST. QTY. FY 26/27	BIDDER	UNIT PRICE	ESTIMATED DELIVERY TIME
		METER YOKES/ACCESSORIES						G+C		
W	1	METER RETROSETTER W/ 360° LOCKWING & DC; MUELLER (FORD ALTERNATE)	5/8" X 3/4"	203B2446-R5---N	RETRO-2CVBRHH-NL	EA	10		$240.04	
W	2	METER RISER; RELOCATOR W/ 360° LOCKWING & DC; MUELLER (FORD ALTERNATE)	5/8" X 3/4" X 7"	234B24118R5---N	VBHH42-7WR-NL	EA	200		$229.18	
W	3	METER RISER; RELOCATOR W/ 360° LOCKWING & DC; MUELLER (FORD ALTERNATE)	5/8" X 3/4" X 12"	238B24118R5---N	VBHH42-12-NL	EA	10		$231.82	
W	4	METER RISER RELOCATOR W/ 360° LOCKWING & DC; MUELLER (FORD ALTERNATE)	1" X 10"	389B24118R5---N	VBHH44-10-NL	EA	80		$378.46	
W	5	METER RISER; RELOCATOR W/ 360° LOCKWING & DC; MUELLER (FORD ALTERNATE)	1.5" X 14"	063B2424--5N	VBRHH46-14-NL	EA	5		$1740.89	
W	6	METER RISER; RELOCATOR W/ 360° LOCKWING & DC; MUELLER (FORD ALTERNATE)	2" X 14"	087B2424--5N	VBRHH47-14-NL	EA	10		$1833.51	
W	7	METER RISER; RELOCATOR W/360° LOCKWING & DC; FORD W/BYPASS	2" X 14"	1-VBHH47-14B-NL	n/a	EA	2		$1935.36	
W	9	METER SWIVEL 2.5L; FORD	5/8" X 3/4" X 3/4"x 2.5" LONG	C38-23-2.5-NL	MUELLER H-10890N	EA	200		$14.40	
W	10	METER SWIVEL COUPLING ; FORD	5/8" x 3/4" x 3/4" x 2.25" LONG	C38-23-2.25-NL	MUELLER H-10890026	EA	5		$14.60	
W	11	METER SWIVEL COUPLING STRAIGHT; FORD	1"	C38-44-2-625-NL	MUELLER H-10890	EA	80		$22.49	
W	12	FLANGE PAK FOR METER - BRASS (BOX W/2)	1.5"	4415FSC	or equal	EA	8		$88.97	
W	13	FLANGE PAK FOR METER - BRASS (BOX W/ 2)	2"	4420FSC	or equal	EA	10		$117.35	
W	14	A-24 METER ADAPTOR; FORD	5/8" x 3/4" to 1"	A24-NL	or equal	EA	120		$37.31	
W	15	A-47 FLANGED METER ADAPTOR; FORD (BOX W/ 2)	1" TO 2"	A47-NL	or equal	EA	5		$222.01	
W	16	A-67 FLANGED METER ADAPTOR; FORD (BOX W/2)	1.5" TO 2"	A67-NL	or equal	EA	5		$319.42	

WATER	ITEM #	DESCRIPTION	SIZE	APPROVED PART #	ALTERNATE PART #	UNIT	EST. QTY. FY 26/27	BIDDER	UNIT PRICE	ESTIMATED DELIVERY TIME
		WATER REGULATORS						G+C		
W	17	REGULATOR; WATTS	3/4"	LF25AUB-Z3		EA	4		$150.72	
W	18	REGULATOR; WATTS	1"	1LF25AUB-Z3		EA	4		$227.70	
W	19	REGULATOR; ZURN WILKINS	3/4"	MODEL 70XL		EA	2		$97.69	

WATER	ITEM #	DESCRIPTION	SIZE	APPROVED PART #	ALTERNATE PART #	UNIT	EST. QTY. FY 26/27	BIDDER	UNIT PRICE	ESTIMATED DELIVERY TIME
		WATER MOUDLE								
W	21	ITRON UNIVERSAL MOUDLE W/ LID MOUNTING KIT	UNIVERSAL	ERW-1350-001 100W+/CFG-1601-001	n/a	EA	275	G+C	$9.38	
W	22	ITRON UNIVERSAL LEAK SENSOR	UNIVERSAL	LDS-1601-001	n/a	EA	10	G+C	$236.38	
W	23	CELLULAR 500W MODULE W/ LID MOUNTING KIT	UNIVERSAL	ECW-1700-001/CFG-1601-001	n/a	EA	100		NB	

WATER	ITEM #	DESCRIPTION	SIZE	APPROVED PART #	ALTERNATE PART #	UNIT	EST. QTY. FY 26/27	BIDDER	UNIT PRICE	ESTIMATED DELIVERY TIME
		METERS AND PARTS								
W	24	METER CIB/HRE/USG W/ ITRON CONNECTOR; BADGER	5/8" X 3/4"	MODEL 25LL (NSF 61-G MTR)	n/a	EA	200		NB	
W	25	METER CIB/HRE/USG W/ ITRON CONNECTOR; BADGER	1"	MODEL 70 LL (NSF 61-G MTR)	n/a	EA	80		NB	
W	26	METER CIB/HRE/USG W/ ITRON CONNECTOR; BADGER	1.5	MODEL 120 LL (NSF 61-G-MTR)	n/a	EA	4		NB	
W	27	METER ELLIPTICALW/T. PLUG HRE/USG W/ ITRON CONNECTOR W/ D. P.; BADGER	2"	MODEL 170 LL (NSF 61- G-MTR)	n/a	EA	6		NB	
W	28	METER BOTTOMS FOR BADGER METER; BADGER	5/8" X 3/4"	57799 - 001	n/a	EA	25		NB	
W	29	METER BOTTOMS FOR BADGER METER	1"	59293 - 002	n/a	EA	10	NB	NB	
W	37	CHAMBER for M70 BADGER METER	1"	33334-032	n/a	EA	5		NB	
W	38	CHAMBER for M120 BADGER METER	1.5"	33334-017	n/a	EA	5		NB	
W	39	CHAMBER forM170 BADGER METER	2"	33334-028	n/a	EA	5		NB	
W	40	RETROFIT REGISTER w/ ITRON CONNECTOR; BADGER	5/8" X 3/4"	M25/RETRO/RT	n/a	EA	400		NB	
W	41	RETROFIT REGISTER w/ ITRON CONNECTOR; BADGER	1"	M70/RETRO/RT	n/a	EA	6		NB	
W	42	RETROFIT REGISTER w/ ITRON CONNECTOR; BADGER	1.5"	M120/RETRO/RT	n/a	EA	2		NB	
W	43	RETROFIT REGISTER w/ ITRON CONNECTOR; BADGER	2"	M170/RETRO/RT	n/a	EA	4		NB	

WATER	ITEM #	DESCRIPTION	SIZE	APPROVED PART #	ALTERNATE PART #	UNIT	EST. QTY. FY 26/27	BIDDER	UNIT PRICE	ESTIMATED DELIVERY TIME
		ULTRASONIC METERS AND PARTS								
W	44	NEPTUNE METER W/ 5' ITRON CONNECTOR in 100 USG	2" x 17"	EU2E1G1SG61		EA	4	NB	NB	

WATER MATERIALS BID LIST 2025-2026

W	45	NEPTUNE METER W/ 25' ITRON CONNECTOR in 100 USG W/ FLANGE PAKS	3"X 12"	EU3A1G1SG61		EA	2		NB	
W	46	NEPTUNE METER W/ 25' ITRON CONNECTOR in 100 USG W/ FLANGE PAKS	4" X 14"	EU3C1G1SG61		EA	2	NB	NB	
W	47	NEPTUNE METER W/ 25' ITRON CONNECTOR in 100 USG W/ FLANGE PAKS	6" X 18"	EU3E1G1SG61		EA	3		NB	
WATER	ITEM #	DESCRIPTION	SIZE	APPROVED PART #	ALTERNATE PART #	UNIT	EST. QTY. FY 26/27	BIDDER	UNIT PRICE	ESTIMATED DELIVERY TIME
		METER BOXES AND LIDS						G+C		
W	48	SIGMA RMB-132418-SW W/ LC1324T-D READ DOOR AND RECESS TOUCH READ HOLE	5/8" x 3/4" meters	RMB- 132418-SW	OLD CASTLE 1324X18 /DI65-45-12	EA	50		$193.37	stock
W	49	SIGMA RMB-173018-SW W/ LC1730T-D READ DOOR AND RECESS TOUCH READ HOLE	1" - 2" meters	RMB- 173018-SW	OLD CASTLE 1730X18/DI65-45-12	EA	25		$302.28	stock
W	50	SIGMA LID ONLY LC1324T-D READ DOOR AND RECESS TOUCH READ HOLE	5/8" x 3/4" meters	RMB-1324-L-RT	TRI CAST LID DI 6545-12 W/ READ DOOR /TRANS HOLE1324	EA	10		$87.36	stock
W	51	SIGMA LID ONLY LC1730T-D READ DOOR AND RECESS TOUCH READ HOLE	1" - 2" meters	RMB-1730-L-RT	TRI CAST LID DI 6545-12 W/ READ DOOR /TRANS HOLE1730	EA	10		$149.23	stock
W	55	CI SOLID METER BOX LID W/ ITRON TR HOLE FOR BROOKS 36H15 METER BOX LID ONLY	CI SOLID LID FOR BROOKS 36HI5	LC 223T ITRON	n/a	EA	25		$37.80	stock
		*1324 AND 1730 BOXES SHALL COME W/LID READER DOOR AND RECESS TOUCH READ HOLE		LC1324T-D/1730T-D	Tricast DI w/ read door /trans hole 1324/1730					
WATER	ITEM #	DESCRIPTION	SIZE	APPROVED PART #	ALTERNATE PART #	UNIT	EST. QTY. FY 26/27	BIDDER	UNIT PRICE	ESTIMATED DELIVERY TIME
		VAULTS								
W	56	METER VAULT W/ ALUMINUM LID	2" METER VAULT	SEE DRAWING			2		NB	
WATER	ITEM #	DESCRIPTION	SIZE	APPROVED PART #	ALTERNATE PART #	UNIT	EST. QTY. FY 26/27	BIDDER	UNIT PRICE	ESTIMATED DELIVERY TIME
		BRASS FITTINGS								
W	59	BRASS REDUCTION COUPLING	2" X 1.5"	B-RC0807		EA	2		$34.10	Stock
W	60	ROUGH BRASS 45° COUPLING	1.5"	BR4L		EA	2		$23.30	stock
W	61	ROUGH BRASS 90° COUPLING	1.5"	BR9L		EA	2		$28.78	stock
W	64	FEMALE THREAD BALL VALVE; FORD	3/4"	B11-233W-NL		EA	10		$145.45	stock
W	65	BRASS TEE	2"x2"x2"	NSF61-4		EA	10		$46.62	stock
W	66	BRASS THREADED 90°; MATCO	2"	NSF61-4		EA	10		$33.67	stock
W	67	BRASS THREADED STREET 90°; MATCO	2"	NSF61-4		EA	10		$49.21	stock
W	68	THREADED COUPLING; MATCO	2"	NSF61-4		EA	10		$29.03	stock
W	69	BRASS ALL-THREAD	1.5"			EA	2		$10.57	stock
W	70	BRASS NIPPLE	1.5" X 6"	BRNLU		EA	2		$28.09	stock
W	71	BRASS ALL THREAD; MATCO--NORCA	2"	NBR08CL		EA	20		$16.09	stock
W	72	BRASS NIPPLE; MATCO-NORCA	2" X 6" LONG	NBR086		EA	10		$36.12	stock
W	73	BRASS NIPPLE; BMI	2" X 12" LONG	7 77701049941		EA	10		$71.17	stock
W	74	BRASS NIPPLE	2" X 18" LONG			EA	6		NB	per order
W	75	BRASS NIPPLE	2" X 24" LONG			EA	6		NB	per order
W	76	CHECK VALVE; RED & WHITE	1.5"	236AB 1 1/2		EA	4		$21.83	2-4 weeks
W	77	CHECK VALVE; RED & WHITE	2"	236AB 2		EA	4		$36.13	in stock
W	78	APOLLO BALL VALVE	2"	A94ALF10801A		EA	6		$304.94	2-4 weeks
WATER	ITEM #	DESCRIPTION	SIZE	APPROVED PART #	ALTERNATE PART #	UNIT	EST. QTY. FY 26/27	BIDDER	UNIT PRICE	ESTIMATED DELIVERY TIME
		COMPRESSION FITTINGS						G+C		
W	82	COUPLING; FMLIP; FORD	FMLIP 3/4" X 3/4" CTS	C14-33-Q-NL		EA	5		$21.10	stock
W	83	COUPLING; FORD	3/4" CTS X 3/4" CTS	C44-33-Q-NL		EA	30		$24.43	stock
W	84	COUPLING; FORD	3/4" CTS PAK X 3/4" IP MALE	C84-33-Q-NL		EA	5		$20.05	stock
W	85	COUPLING; FORD	3/4" CTS PACK X 1" CTS PACK	C44-34-Q-NL		EA	30		$28.38	stock
W	86	COUPLING; FMLIP; FORD	FMLIP 1" X 1" CTS	C14-44-Q-NL		EA	15		$28.62	stock
W	87	COUPLING; FORD	1" CTS X 1" CTS	C44-44-Q-NL		EA	25		$27.94	stock
W	88	COUPLING; FORD	1" CTS X 1" I.P. MALE	C84-44-Q-NL		EA	6		$23.74	stock
W	89	COUPLING; FORD	2" CTS X 2" CTS JOINT PK	C44-77-Q-NL		EA	6		$123.84	stock
W	90	2" CTS X 2" IRON PIPE THREAD; FORD	2" CTS X 2" IRON PIPE THREAD	C84-77-Q-NL		EA	6		$94.79	stock
W	91	COUPLING; T'S ; FORD	3/4" X 3/4" X 3/4" CTS	T444-333-Q-NL		EA	20		$59.10	stock
W	92	COUPLING; T'S ; FORD	3/4" X 3/4" X 1" CTS	T444-443-Q-NL		EA	10		$64.92	stock
W	93	COUPLING; T'S; FORD	1" X 1" X 3/4"	T444-443-AWT-Q-NL		EA	5		NB	
W	94	COUPLING; T'S; FORD	1" X 1" X 1" CTS PAK JOINT	T444-444-Q-NL		EA	5		$63.25	stock
W	95	BALL VALVE; FORD	3/4"	B44-233W-Q-NL		EA	20		$57.60	stock

WATER MATERIALS BID LIST 2025-2026

W	96	BALL VALVE; FORD	1"	B44-344W-Q-NL		EA	20	G + C	$115.41	
W	97	COUPLING; "Y"; FORD	3/4" X 3/4" X 1" CTS	Y44-243-Q-NL		EA	25		$50.54	
W	98	90° COUPLING; FORD	3/4"	L44-33-Q-NL		EA	5		$31.55	
W	99	90° COUPLING; FORD	1"	L44-44-Q-NL		EA	5		$40.53	
W	100	Q -NUT ASSEMBLY	3/4"	QJN4-3		EA	20		$9.73	
W	101	Q-NUT ASSEMBLY	1"	QJN4-4		EA	20		$11.92	
W	102	FEMALE COPPER THREAD GRIP JOINT; FORD	3/4" X 3/4" CTS	C04-33-Q-NL		EA	5		$22.81	
W	103	FEMALE COPPER THREAD GRIP JOINT; FORD	1" X 1" CTS	C04-44-Q-NL		EA	5		$33.53	
W	104	PAK J ASSEMBLY; FORD	1" FEMALE X 3/4" CTS	C08-43-NL		EA	5		$26.81	
W	105	COUPLING SWIVEL 45 DEGREE; FORD	3/4"X3/4"	LA04-33S-Q-NL		EA	5		$36.02	
W	106	COUPLING SWIVEL 45 DEGREE; FORD	1"X1"	LAO4-44S-Q-NL		EA	5		$51.18	
W	107	COUPLING SWIVEL 90 DEGREE; FORD	3/4"X3/4"	L04-33S-Q-NL		EA	5		$40.22	
W	108	COUPLING SWIVEL 90 DEGREE; FORD	1"X1"	L04-44S-Q-NL		EA	5		$54.86	
W	109	MULTI SERVICE Y NL 1-2" FMLIP X 4-1" FMLIP	2"X1"	Y11-474-NL		EA	5		$98.57	
WATER	**ITEM #**	**DESCRIPTION**	**SIZE**	**APPROVED PART #**	**ALTERNATE PART #**	**UNIT**	**EST. QTY. FY 26/27**	**BIDDER**	**UNIT PRICE**	**ESTIMATED DELIVERY TIME**
		CURB STOPS						G + C		stock
W	113	CURB STOP W/360 DEGREE LOCKING WINGNUT; FORD	3/4"	B43-232WR-Q-NL		EA	200		$161.63	
W	114	CURB STOP W/360 DEGREE LOCKING WINGNUT; FORD	1"	B43-344WR-Q-NL		EA	25		$112.32	
W	115	BALL VALVE PAD WING/CURB STOP; FORD	1.5"	BF13-666W-NL		EA	4		$230.29	
W	116	BALL VALVE PAD WING/CURB STOP; FORD	2"	BF13-777W-NL		EA	4		$367.21	
W	117	BALL VALVE PAD WING W/COMPRESSION FITTING; FORD	2"	BF43-777W-Q-NL		EA	6		$412.98	
WATER	**ITEM #**	**DESCRIPTION**	**SIZE**	**APPROVED PART #**	**ALTERNATE PART #**	**UNIT**	**EST. QTY. FY 26/27**	**BIDDER**	**UNIT PRICE**	**ESTIMATED DELIVERY TIME**
		CORP STOPS						G + C		stock
W	122	CORPORATION STOP; FORD	3/4" TAPER X 3/4" CTS	FB1000-3-Q-NL		EA	10		$64.72	
W	123	CORPORATION STOP; FORD	1" CC TAPER x 1"CTS	FB1000-4-Q-NL		EA	20		$85.10	
W	124	CORPORATION STOP, IRON PIPE THREADS; FORD	1" IP THREAD X1" CTS	FB1100-4-Q-NL		EA	5		$85.10	
WATER	**ITEM #**	**DESCRIPTION**	**SIZE**	**APPROVED PART #**	**ALTERNATE PART #**	**UNIT**	**EST. QTY. FY 26/27**	**BIDDER**	**UNIT PRICE**	**ESTIMATED DELIVERY TIME**
		TAPPING SADDLES								2-4 weeks
W	143	TAPPING SADDLE; SMITH BLAIR	2" X 3/4" (2.35-2.56)	315-00025607-000		EA	5	G + C	$27.59	
W	144	TAPPING SADDLE; SMITH BLAIR	2" X 1" (2.35-2.56)	315-00025609-000		EA	4	G + C	$27.59	
W	145	TAPPING SADDLE; SMITH BLAIR	2-1/4" X 3/4" (2.44-2.91)	315-00029107-000		EA	5	G + C	$49.20	
W	146	TAPPING SADDLE; SMITH BLAIR	2-1/4" X 1" (2.44-2.91)	315-00029109-000		EA	5	G + C	$28.15	
W	149	TAPPING SADDLE; SMITH BLAIR	4" X 3/4" (4.40-4.80)	315-00048007-000		EA	4	G + C	$27.53	
W	151	TAPPING SADDLE; SMITH BLAIR	4" X 1" (4.40-4.80)	315-00048009-000		EA	4	G + C	$27.53	
W	155	TAPPING SADDLE; SMITH BLAIR	4" X 2" (4.40-4.80)	315-00048014-000		EA	4	G + C	$34.50	
W	158	TAPPING SADDLE; SMITH BLAIR	6" X 3/4" (6.84-7.60)	315-00076007-000		EA	5		$32.40	
W	160	TAPPING SADDLE ; SMITH BLAIR	6" X 1" (5.94-6.90)	315-00069009-000		EA	5		$31.89	
W	161	TAPPING SADDLE; SMITH BLAIR	6" X 1" (6.84-7.60)	315-00076009-000		EA	5		$32.40	
W	163	TAPPING SADDLE; SMITH BLAIR	6" X 2" (5.94-6.90)	315-00069014-000		EA	5		$37.47	
W	165	TAPPING SADDLE ; SMITH BLAIR	6"x2" (6.84-7.60)	315-00076014-000		EA	5		$37.96	
W	166	TAPPING SADDLE ; SMITH BLAIR	8" X 3/4" (8.54-10.10)	315-00101007-000		EA	5		$38.47	
W	167	TAPPING SADDLE; SMITH BLAIR	8" X 1" (8.54-10.10)	315-00101009-000		EA	4		$38.47	
W	171	TAPPING SADDLE; SMITH BLAIR	8" X 2" (8.54-10.10)	315-00101014-000		EA	2		$45.71	
W	175	TAPPING SADDLE; SMITH BLAIR	10" X 2" (10.64-12.12)	315-00121214-00		EA	4		$51.34	
W	176	TAPPING SADDLE; SMITH BLAIR	12" X 3/4" (12.64-14.32)	315-00143207-000		EA	2		$48.61	
W	178	TAPPING SADDLE; SMITH BLAIR	12" X 1" (12.62-14.32)	315-00143209-000		EA	2		$48.61	
W	180	TAPPING SADDLE; SMITH BLAIR	12"-14"X 2" (12.62-14.32)	315-00143214-000		EA	2		$61.76	
W	181	TAPPING SADDLE; SMITH BLAIR	16"- X 2" (17.25-17.80)	317-00178014-000		EA	2		$132.98	
W	182	TAPPING SADDLE; SMITH BLAIR	16"- X 2" (17.25-17.80)	317-00195014-000		EA	2		$173.45	
W	183	TAPPING SADDLE:SMITH BLAIR	20"X2" (21.55-21.65)	317-00216014-000		EA	2		$201.64	
W	184	TAPPING SADDLE; SMITH BLAIR	24" X 2" (25.75-25.85)	317-00258014-000		EA	2		$229.53	

WATER MATERIALS BID LIST 2025-2026

WATER	ITEM #	DESCRIPTION	SIZE	APPROVED PART #	ALTERNATE PART #	UNIT	EST. QTY. FY 26/27	BIDDER	UNIT PRICE	ESTIMATED DELIVERY TIME
		REPAIR CLAMPS								Stock
W	188	REPAIR CLAMP; SMITH BLAIR	3/4" X 6" FL CIR			EA	2	G + C	$69.01	
W	189	REPAIR CLAMP; SMITH BLAIR	1" X 6" FL CIR (PVC)	244-00013206-000		EA	2	G + C	$38.27	
W	190	REPAIR CLAMP; SMITH BLAIR	1-1/4" X 6"	244-00016609-000		EA	4	G + C	$16.81	
W	191	REPAIR CLAMP; SMITH BLAIR	1.5" X 6" FL CIR (PVC)	244-00019006-000		EA	4	G + C	$39.49	
W	192	REPAIR CLAMP; SMITH BLAIR	2" X 7" FL CIR (2.35-2.63)	226-00023807-000		EA	8		$42.28	
W	193	REPAIR CLAMP; SMITH BLAIR	2.5" X 7" FL CIR (2.70-3.00)	226-00027507-000		EA	6		$43.30	
W	194	REPAIR CLAMP; SMITH BLAIR	2" X 12.5" FL CIR (2.35-2.63)	226-00023812-000		EA	2		$70.96	
W	195	REPAIR CLAMP; SMITH BLAIR	2.5" X 12" FL CIR (2.70-3.00)	226-00027512-000		EA	2		$74.55	
W	196	REPAIR CLAMP; SMITH BLAIR	2" X 15" (2.35-2.63)	226-00023815-000		EA	2		$81.86	
W	197	REPAIR CLAMP; SMITH BLAIR	2" X 25" (2.35-2.63)	226-00023825-000		EA	2		$146.17	
W	198	REPAIR CLAMP; SMITH BLAIR	2.25" X 25" (2.70-3.00)	226-00027525-000		EA	2		$156.88	
W	199	REPAIR CLAMP; SMITH BLAIR	3" X 7.5" FL CIR (3.73-4.00)	226-00037507-000		EA	2		$48.52	
W	200	REPAIR CLAMP; SMITH BLAIR	3" X 12" FL CIR (3.46-3.70)	226-00035012-000		EA	2		$78.60	
W	201	REPAIR CLAMP; SMITH BLAIR	4" X 7.5" FL CIR (3.96-4.25)	226-00040007-000		EA	2		$50.24	
W	202	REPAIR CLAMP; SMITH BLAIR	4" X 7.5" FL CIR (4.45-4.73)	226-00045007-000		EA	2		$52.03	
W	203	REPAIR CLAMP; SMITH BLAIR	4" X 7.5" FL CIR (4.74-5.14)	226-00048007-000		EA	6		$53.86	
W	204	REPAIR CLAMP; SMITH BLAIR	4 X 12.5" FL CIR (4.74-5.14)	226-00048012-000		EA	2		$88.25	
W	205	REPAIR CLAMP; SMITH BLAIR	4 X 15" FL CIR (PVC) (4.74-5.14)	226-00048015-000		EA	2		$106.47	
W	207	REPAIR CLAMP; SMITH BLAIR	6" X 7" FL CIR (6.84-7.24)	226-00069007-000		EA	10		$63.50	
W	208	REPAIR CLAMP; SMITH BLAIR	6" X 7.5" FL CIR (6.56-6.96)	226-00066307-000		EA	4		$62.18	
W	210	REPAIR CLAMP; SMITH BLAIR	6" X 12" FL CIR (6.56-6.96)	226-00066312-000		EA	2		$100.19	
W	211	REPAIR CLAMP; SMITH BLAIR	6" X 12" FL CIR (6.84-7.24)	226-00069012-000		EA	4		$101.65	
W	212	REPAIR CLAMP; SMITH BLAIR	6" X 12.5" (7.05-7.45)	226-00071012-000		EA	2		$103.32	
W	213	REPAIR CLAMP; SMITH BLAIR	6" X 15" FL CIR (6.56-6.96)	226-00066315-000		EA	2		$112.75	
W	214	REPAIR CLAMP; SMITH BLAIR	6" X 15" (6.84-7.24)	226-00069015-000		EA	2		$118.13	
W	215	REPAIR CLAMP; SMITH BLAIR	6" X 15" (7.05-7.45)	226-00071015-000		EA	2		$119.67	
W	217	REPAIR CLAMP; SMITH BLAIR	8" X 7" FL CIR (8.54-8.94)	226-00086307-000		EA	4		$73.69	
W	218	REPAIR CLAMP; SMITH BLAIR	8" X 7" FL CIR (8.99-9.39)	226-00090507-000		EA	8		$176.03	
W	219	REPAIR CLAMP; SMITH BLAIR	8" X 12" FL CIR (8.99-9.39, DIP)	226-00090512-000		EA	2		$121.75	
W	220	REPAIR CLAMP; SMITH BLAIR	8" X 15" (8.54-8.94)	226-00086315-000		EA	2		$140.90	
W	221	REPAIR CLAMP; SMITH BLAIR	8" X 15" (8.99-9.39)	226-00090515-000		EA	2		$145.08	
W	222	REPAIR CLAMP; SMITH BLAIR	10" X 15" FL CIR (DIP) (11.04-11.44)	226-00111015-000		EA	2		$181.16	
W	223	REPAIR CLAMP; SMITH BLAIR	10" X 20" (11.04-11.44)	226-00114020-000		EA	2		$251.09	
W	224	REPAIR CLAMP; SMITH BLAIR	12" X 7" FL CIR (13.10-13.50)	226-00132007-000		EA	2		$104.38	
W	225	REPAIR CLAMP; SMITH BLAIR	12" X 12" FL CIR (DIP) (13.10-13.50)	226-00132012-000		EA	2		$167.99	
W	226	REPAIR CLAMP; SMITH BLAIR	12' X 15' FL CIR (DIP) (13.10 - 13.50)	226-00132015-000		EA	2		$208.75	
W	227	REPAIR CLAMP; SMITH BLAIR	16" X 15" (17.15-17.90)	228-20171515-000		EA	2		$433.33	
W	229	REPAIR CLAMP; SMITH BLAIR	16" X 20" FL CIR (17.15-17.90)	228-20178220-000		EA	2		$586.87	
W	230	REPAIR CLAMP; SMITH BLAIR	16" X 30" (17.15-17.90)	228-20171530-000		EA	2		$857.25	
W	231	REPAIR CLAMP; SMITH BLAIR	18" X 20" FL CIR (19.23-19.98)	228-20192320-000		EA	2		$608.41	
W	232	REPAIR CLAMP; SMITH BLAIR	20" X 20" (21.52-22.27)	228-20215220-000		EA	2		$644.27	
W	233	REPAIR CLAMP; SMITH BLAIR	24" X 30" FL CIR (25.70-26.80)	228-30257030-000		EA	2		$1621.20	
W	234	REPAIR CLAMP; SMITH BLAIR	24" X 20" FL CIR (25.70-26.80)	228-30257020-000		EA	2		$1102.04	
W	237	REPAIR CLAMP; SMITH BLAIR W/1" CC TAP	6"X7.5" W/1" TAP (6.84-7.24)	238-00069007-009		EA	2		$89.29	
W	238	REPAIR CLAMP; SMITH BLAIR W/1" CC TAP	8"X7.5" W/ 1" TAP (8.99-9.39)	238-00090507-009					$101.77	

WATER	ITEM #	DESCRIPTION	SIZE	APPROVED PART #	ALTERNATE PART #	UNIT	EST. QTY. FY 26/27	BIDDER	UNIT PRICE	ESTIMATED DELIVERY TIME
		HYMAX								Stock
W	240	HYMAX; KRAUSZ	1.5" (1.61-2.13)	860-56-0041-16		EA	4	G + C	$154.83	
W	241	HYMAX; KRAUSZ	2" (2.10-3.03)	860-56-0054-16		EA	4	G + C	$163.24	
W	242	HYMAX; KRAUSZ	3" (3.46-4.33)	860-56-0088-16		EA	4	G + C	$215.34	
W	243	HYMAX; KRAUSZ	4" (4.25-5.63)	860-56-0108-16C		EA	4	G + C	$275.92	
W	244	HYMAX; KRAUSZ	6" (6.42-7.68)	860-56-0163-16		EA	10	G + C	$358.79	
W	245	HYMAX; KRAUSZ	8" (8.54-9.84)	860-56-0217-16		EA	10	G + C	$405.08	
W	246	HYMAX; KRAUSZ	10" (10.70 - 12.00)	860-56-0272-16		EA	2	G + C	$530.75	

WATER MATERIALS BID LIST 2025-2026

W	247	HYMAX; KRAUSZ	12" (12.40-13.66)	860-56-0315-16		EA	2	G + C	$626.46		
WATER	ITEM #	DESCRIPTION	SIZE	APPROVED PART #	ALTERNATE PART #	UNIT	EST. QTY. FY 26/27	BIDDER	UNIT PRICE	ESTIMATED DELIVERY TIME	
		PIPE						G + C			
W	254	PEX PIPE; REHAU 300 ft. Roll	3/4"	261056-100	n/a	FT	2000		$1.00	Stock	
W	255	PEX PIPE; REHAU 300 ft. roll	1"	261076-300	n/a	FT	4000		$1.45	Stock	
W	256	PEX PIPE; REHAU 300 ft. roll	2"		n/a	FT	300		$9.81	Stock	
W	258	CL-350 DUCTILE IRON WATER PIPE W/ BITUMINOUS SEAL COATING INSIDE & OUTSIDE	3"	CL-350	n/a	FT	60		NB		
W	263	CL-350 DUCTILE IRON WATER PIPE W/ BITUMINOUS SEAL COATING INSIDE & OUTSIDE	12"	CL-350	n/a	FT	40		NB		
W	264	CL-350 DUCTILE IRON WATER PIPE W/ BITUMINOUS SEAL COATING INSIDE & OUTSIDE	16"	CL-350	n/a	FT	40		NB		
W	265	CL-350 DUCTILE IRON WATER PIPE W/ BITUMINOUS SEAL COATING INSIDE & OUTSIDE	18"	CL-350	n/a	FT	40		NB		
W	266	CL-350 DUCTILE IRON WATER PIPE W/ BITUMINOUS SEAL COATING INSIDE & OUTSIDE	24"	CL-350	n/a	FT	40		NB		
W	267	CL-350 DUCTILE IRON WATER PIPE W/ BITUMINOUS SEAL COATING INSIDE & OUTSIDE	36"	CL-350	n/a	FT	40		NB		
W	268	C900 WATER PIPE SDR 14	4"	C-900		FT	100		NB		
W	269	C900 WATER PIPE SDR 14	6"	C-900		FT	200		NB		
W	270	C900 WATER PIPE SDR 14	8"	C-900		FT	200		NB		
W	271	C900 WATER PIPE SDR 14	10"	C-900		FT	40		NB		
W	273	SDR 11, 2" IPS BLACK WATER PIPE	2"	SDR-11		FT	100		NB		
WATER	ITEM #	DESCRIPTION	SIZE	APPROVED PART #	ALTERNATE PART #	UNIT	EST. QTY. FY 26/27	BIDDER	UNIT PRICE	ESTIMATED DELIVERY TIME	
		PIPE FITTINGS								Stock	
W	277	PIPE STIFFENER (PLASTIC)	3/4"		PL-B	EA	1000	G + C	$0.35		
W	278	PIPE STIFFENER (PLASTIC)	1"		PL-C	EA	2000	G + C	$0.41		
W	279	PIPE INSERT; FORD # 55 STAINLESS STELL	2"		Insert-55	EA	14		$3.15		
W	293	CAP; TYLER	2"			EA	2		$68.86		
W	294	CAP; TYLER	3"			EA	2		$35.73		
W	295	CAP; TYLER	4"			EA	2		$36.70		
W	296	CAP; TYLER	4" X 2"			EA	2		$76.00		
W	297	CAP; TYLER	6"			EA	2		$64.38		
W	298	CAP; TYLER	6" X 2"			EA	2		$102.08		
W	299	CAP; TYLER	8"			EA	2		$105.88		
W	300	CAP; TYLER	8" X 2"			EA	2		$141.64		
W	345	ANCHOR COUPLING; TYLER	6" X 13" LONG			EA	6		$257.89		
W	346	ANCHOR COUPLING; TYLER	6" X 18" LONG			EA	6		$284.52		
W	347	ANCHOR COUPLING; TYLER	6" X 24" LONG			EA	6		$377.06		
WATER	ITEM #	DESCRIPTION	SIZE	APPROVED PART #	ALTERNATE PART #	UNIT	EST. QTY. FY 26/27	BIDDER	UNIT PRICE	ESTIMATED DELIVERY TIME	
		ACCESSORIES						G + C		Stock	
W	389	M.J. ACC KIT; UFCO	3"	912-096-5892		EA	4		$31.80		
W	390	M.J. ACC KIT; SIGMA	4"	DGP 4"		EA	5		$39.12		
W	391	M.J. BOLT PACK SET	6"	SIP 6"		EA	10		$49.74		
W	392	M.J. BOLT PACK SET	8"	SIP 8"		EA	4		$54.34		
W	393	M.J. ACC KIT; SIGMA	10"	DGP 10		EA	2		$81.88		
W	394	M.J. ACC KIT	12"			EA	4		$86.39		
W	395	M.J. ACC KIT	16"			EA	4		$139.50		
W	397	TRANSITION GASKET	4"			EA	4		$10.47		
W	398	TRANSITION GASKET	6"			EA	8		$12.70		
W	399	TRANSITION GASKET	8"			EA	6		$17.89		
W	400	MEGALUG D. I.; FORD	3"	UFR 1500-SA-3-I		EA	4		$49.25		
W	401	MEGALUG AND ACC KIT (D I); SIGMA	4"	829,805,219,567		EA	4		$43.34		
W	402	MEGALUG AND ACC KIT (D I); SIGMA	6"	UFR 1400-DA-6		EA	4		$62.33		
W	403	MEGALUG AND ACC KIT (D I); EBAA	8"	110 804 1903		EA	2		$75.31		
W	404	MEGALUG AND ACC KIT (D I); EBAA	10"	1,110,041,903		EA	2		$110.16		
W	405	MEGALUG AND ACC KIT (D I); FORD	12"	UFR 1400-DA-12-I		EA	2		$96.64		
W	406	MEGALUG AND ACC KIT (D I)	16"			EA	4		$283.35		
W	407	MEGALUG AND ACC KIT (D I)	24"			EA	2		$546.23		

WATER MATERIALS BID LIST 2025-2026

W	408	MEGALUG AND ACC KIT (D.I.)	36"			EA	2	G + C	$1988.33	Stock
W	412	MEGALUG AND ACC KIT (C900); SIGMA	4"	829,805,219,864		EA	10		$68.05	Stock
W	413	MEGALUG AND ACC KIT (C900); SIGMA	6"	829 805 219 871		EA	40		$76.43	stock
W	414	MEGALUG AND ACC KIT (C900); SIGMA	8"	829 805 219 888		EA	30		$97.92	Stock
W	415	C900 MEGALUG; EBAA	10"	2,010,161,903		EA	6		$149.28	stock
W	416	C900 MEGALUG; SIGMA	12"	829 052 199 01		EA	6		$150.88	Stock
W	417	MEGALUG AND ACC KIT ((DI)	18"			EA	4		NB	
W	418	MEGALUG AND ACC KIT (D I)	20"			EA	4		NB	

WATER	ITEM #	DESCRIPTION	SIZE	APPROVED PART #	ALTERNATE PART #	UNIT	EST. QTY. FY 26/27	BIDDER	UNIT PRICE	ESTIMATED DELIVERY TIME
		VALVES						G + C		
W	423	GATE VALVE - THREADED; KENNEDY	2"	228D2X		EA	10		$491.82	stock
W	424	GATE VALVE; KENNEDY	3"	324,067,014,001		EA	2		$721.30	stock
W	425	GATE VALVE' M&H	4"	367,571,011,008		EA	2		$806.13	stock
W	426	GATE VALVE; M&H	6"	467,571,011,008		EA	5		$1028.22	stock
W	427	TAPPING VALVE; MUELLER	6"	4,187,696		EA	2		$1409.66	stock
W	428	GATE VALVE; MUELLER	8"	080A236023LN		EA	5		$1637.93	stock
W	429	GATE VALVE	10"			EA	1		$2483.10	2-4 weeks
W	430	GATE VALVE; M&H	12"	587,571,011,008		EA	1		$3201.92	2-4 weeks
W	431	GATE VALVE; MUELLER	16"	11,505,876,777		EA	1		$8577.86	6-8 weeks

WATER	ITEM #	DESCRIPTION	SIZE	APPROVED PART #	ALTERNATE PART #	UNIT	EST. QTY. FY 26/27	BIDDER	UNIT PRICE	ESTIMATED DELIVERY TIME
		VALVE BOXES/RISERS								
W	436	SQUARE VALVE BOX CASTING & LID		JBS 8006		EA	15	G+C	$225.38	Stock
W	437	SQUARE STEEL VALVE BOX RISER	1.5"	JBS 8006		EA	5	G+C	$141.60	stock
W	438	CONCRETE VALVE BOX RISER	2"			EA	15		NB	
W	439	CONCRETE VALVE BOX RISER	4"			EA	15		NB	
W	440	CONCRETE VALVE BOX RISER	6"			EA	15		$46.36	stock
W	441	CONCRETE VALVE BOX RISER	12"			EA	10		$59.78	stock
W	442	CONCRETE VALVE BOX RISER	18"			EA	10		$73.20	stock
W	500	VALVE BOX EXTENSION; SIGMA	1"	VBR-1		EA	25		$29.34	stock
W	501	VALVE BOX EXTENSION; SIGMA	1.5"	VBR-1.5		EA	25		$29.34	stock
W	502	VALVE BOX EXTENSION; SIGMA	2"	VBR-2		EA	30		$38.78	stock
W	503	VALVE BOX EXTENSION; SIGMA	3"	VBR-3		EA	25		$43.75	stock
W	504	VALVE BOX EXTENSION; SIGMA	4"	VBR-4		EA	25		$59.66	stock
W	505	VALVE BOX EXTENSION; SIGMA	6"	VBR-6		EA	25		$73.78	stock
		HIGHLIGHTED PORTION IS ALSO ON THE GAS BID (G-232-237)	*PLEASE ALSO BID ON GAS (G-232-237) AS WELL*	*PLEASE ALSO BID ON GAS (G-232-237) AS WELL*						

WATER	ITEM #	DESCRIPTION	SIZE	APPROVED PART #	ALTERNATE PART #	UNIT	EST. QTY. FY 26/27	BIDDER	UNIT PRICE	ESTIMATED DELIVERY TIME
		HYDRANTS								
W	448	BLOW OFF-ABOVE GROUND; KUPFERLE	2" STRAIGHT BURY	MODEL 77		EA	8	G+C	$953.40	stock
W	449	BLOW OFF-BELOW GROUND; KUPFERLE	2" STRAIGHT BURY	MODEL 78		EA	5	G+C	$948.36	stock
W	450	POST HYDRANT,	3' BURY, 3" MJ SHOE, 2-1/2" OUTLET	M&H MODEL 33		EA	2		$1395.20	stock
W	451	FIRE HYDRANT ASSEMBLY; M&H YELLOW	5 1/4" 3' 6"bury	MODEL 129 3-Way 1 Pumper/2 Hose		EA	6		$3168.55	4-6 weeks
W	452	HYDRANT TRAFFIC REPAIR KIT ; MUELLER	5 1/4"	MUELLER HRP301		EA	5		NB	
W	453	HYDRANT TRAFFIC REPAIR KIT ; AMERICAN	5 1/4"	AMERICAN AD-B62B-KIT		EA	1		NB	
W	454	HYDRANT TRAFFIC REPAIR KIT ; M&H	5 1/4"	M&H		EA	5		$330.57	2 weeks
W	458	MUELLER EXTENSION KIT	5 1/4" X 6"			EA	1		$429.11	stock
W	459	MUELLER EXTENSION KIT	5 1/4" X 12"	A320-010		EA	1		$649.11	stock
W	460	MUELLER EXTENSION KIT	5 1/4" X 18"	A320-16		EA	1		$583.11	2 weeks
W	461	MUELLER EXTENSION KIT	5 1/4" X 24"	A320-20		EA	1		$517.91	stock
W	462	M&H EXTENSION KIT	5 1/4" X 6"			EA	1		$396.28	stock
W	463	M&H EXTENSION KIT	5 1/4" X 12"	441129-5-12		EA	1		$453.77	stock
W	464	M&H EXTENSION KIT	5 1/4" X 18"	441129-5-18		EA	1		$516.43	stock

WATER MATERIALS BID LIST 2025-2026

W	465	M&H EXTENSION KIT	5 1/4" X 24"	441129-5-24		EA	1		$574.38	2 Weeks
WATER	ITEM #	DESCRIPTION	SIZE	APPROVED PART #	ALTERNATE PART #	UNIT	EST. QTY. FY 26/27	BIDDER	UNIT PRICE	ESTIMATED DELIVERY TIME
		INSERT VALVE & SLEEVES								
W	480	INSERT VALVE & SLEEVE W/ INSTALLATION	6"	HYDRO-STOP INSTA-VALVE 250 PATROIT	ROMAC	EA	1	G+C	$7,300	
W	481	INSERT VALVE & SLEEVE W/ INSTALLATION	8"	HYDRO-STOP INSTA-VALVE 250 PATROIT	ROMAC	EA	1	G+C	$8,200	
W	482	INSERT VALVE & SLEEVE W/ INSTALLATION	10"	HYDRO-STOP INSTA-VALVE 250 PATROIT	ROMAC	EA	1	G+C	$14,900	
W	483	INSERT VALVE &SLEEVE W/ INSTALLATION	12"	HYDRO-STOP INSTA-VALVE 250 PATROIT	ROMAC	EA	1	G+C	$17,500	
W	484	INSERT VALVE & SLEEVE W/ INSTALLATION	16"	HYDRO-STOP INSTA-VALVE 250 PATROIT		EA	1	G+C	$35,000	

DUE TO THE UNSTABLE
MARKET AND FLUCTUATING
MANUFACTURING COST, YOUR PRICE
MAY BE SUBJECT TO CHANGE
CALL 1-800-238-3836 TO
CONFIRM PRICE

GAS MATERIALS BID LIST 2025-2026

GAS	ITEM #	DESCRIPTION	SIZE	APPROVED PART #	ALTERNATE PART #	UNIT	EST QTY FY 26/27	BIDDER	UNIT PRICE	ESTIMATED DELIVERY TIME
		METER RISERS						G + C		
G	89	RISER, ANODELESS, 36V X 24H, ELSTER PERFECTION	3/4" X 3/4"	79207		EA	300		$ 40.38	stock
G	90	RISER, ANODELESS, ELSTER PERFECTION	1" X 1"	75766		EA	30		$ 48.20	stock
G	92	RISER, ANODELESS, ELSTER PERFECTION,	2" X 2"	ASR2-2F-PB		EA	30		$ 172.50	stock

GAS	ITEM #	DESCRIPTION	SIZE	APPROVED PART #	ALTERNATE PART #	UNIT	EST QTY FY 26/27	BIDDER	UNIT PRICE	ESTIMATED DELIVERY TIME
		CUTTOFS								
G	96	STOPCOCK; JOMAR 241-004D	3/4"	241-004D		EA	300	G + C	$50.46	2-4 weeks
G	97	STOPCOCK, HIGH PRESSURE, MUELLER	3/4"	3/4" H-11185		EA	10	G + C	$130.27	stock
G	98	STOPCOCK;JOMAR 240-005B STRAIGHT	1"	240-005B		EA	30	G + C	$45.14	2-4 weeks
G	99	STOPCOCK; JOMAR 241-005D	1"	241-005D		EA	40	G + C	$71.61	2-4 weeks
G	100	STOPCOCK; 175 MAOP MUELLER	1 1/4"	1 1/4"H11175		EA	10	G + C	$54.91	stock
G	101	STOPCOCK; 175 MAOP MCDONALD	1 1/2"	560 B 1 1/2"		EA	10	G + C	$78.91	stock
G	102	STOPCOCK; 175 MAOP MUELLER	2"	2" H11175		EA	30	G + C	$93.00	stock

GAS	ITEM #	DESCRIPTION	SIZE	APPROVED PART #	ALTERNATE PART #	UNIT	EST QTY FY 26/27	BIDDER	UNIT PRICE	ESTIMATED DELIVERY TIME
		POLYETHYLENE PIPE								
G	107	PIPE; HIGH DENSITY 8300 4710 BLK/YELLOW STRIPE-SDR-11 (500 FT ROLLS)	3/4"	1114569-83P 00.75"		FT	20000		NB	
G	108	PIPE; HIGH DENSITY 8300 4710 BLK/YELLOW STRIPE-SDR-11(500 FT ROLLS)	1"	1114606-83P 01.00"		FT	3000		NB	
G	109	PIPE; HIGH DENSITY 8300 4710 BLK/YELLOW STRIPE -SDR-11(500 FT ROLLS)	1 1/4"	1056882-83P 01.25"		FT	350	NB	NB	
G	110	PIPE; HIGH DENSITY 8300 4710 BLK/YELLOW STRIPE-SDR-11 (500 FT ROLLS)	2"	1056925-83P 0.200		FT	15000		NB	
G	111	PIPE; HIGH DENISTY 8300 4710 BLK/YELLOW STRIPE -SDR-11(40 FT PER SECTION)	3"	1056967-83P 03.00"		FT	200		NB	
G	112	PIPE; HIGH DENSITY 8300 4710 BLK/YELLOW STRIPE-SDR-11(40 FT PER SECTION)	4"	1061088-83P 04.00"		FT	5000		NB	
G	113	PIPE; HIGH DENSITY 8300 4710 BLK/YELLOW STRIPE -SDR-11(40 FT PER SECTION)	6"	1057061-83P 06.00"		FT	2000		NB	
		DURA LINE NOT ACCEPTED								

GAS	ITEM #	DESCRIPTION	SIZE	APPROVED PART #	ALTERNATE PART #	UNIT	EST QTY FY 26/27	BIDDER	UNIT PRICE	ESTIMATED DELIVERY TIME
		POLYETHYLENE FITTINGS								
G	118	CAP; BUTT FUSE HIGH DENISTY 8100 4710	3/4"	BBF40-07		EA	100	G + C	$3.68	stock
G	119	CAP; BUTT FUSE HIGH DENSITY 8100 4710	1"	BBF40-1		EA	15		$3.83	stock
G	121	CAP; BUTT FUSE HIGH DENSITY8100 4710	2"	BBF40-2		EA	40		$2.90	stock
G	122	CAP; BUTT FUSE HIGH DENSITY 8100 4710	3"	BBF40-3		EA	10		$5.68	stock
G	123	CAP; BUTT FUSE HIGH DENSITY 8100 4710	4"	BBF40-4		EA	25		$11.11	stock
G	124	CAP; BUTT FUSE HIGH DENSITY 8100 4710	6"	BBF40-6		EA	10		$29.27	2 weeks
G	125	REDUCER; BUTT FUSE HIGH DENSITY 8100 4710	1" X 1/2"	1006458		EA	5		$5.93	stock
G	126	REDUCER; BUTT FUSE HIGH DENSITY 8100 4710	1" X 3/4"	1036888		EA	10		$4.86	stock
G	127	REDUCER; BUTT FUSE HIGH DENSITY 8100 4710	1 1/4" X 1"	1007964		EA	10		$5.69	stock
G	128	REDUCER; BUTT FUSE HIGH DENISTY 8100 4710	2" X 1"	1063171		EA	10		$5.88	stock

GAS MATERIALS BID LIST 2025-2026

G	129	REDUCER; BUTT FUSE HIGH DENSITY 8100 4710	2" X 1 1/4"	1007977		EA	10	G + C	$6.29	stock
G	130	REDUCER; BUTT FUSE HIGH DENSITY 8100 4710	3" X 2"	1007985		EA	10		$8.17	stock
G	131	REDUCER; BUTT FUSE HIGH DENSITY 8100 4710	6" X 4"	1006469		EA	10		$27.74	stock
G	132	REDUCER; BUTT FUSE HIGH DENSITY 8100 4710	4" x 3"	1007992		EA	6		$13.10	stock
G	133	REDUCER; BUTT FUSE HIGH DENSITY 8100 4710	4" X 2"	1006466		EA	25		$11.38	2 weeks
G	134	TEE; HIGH DENSITY 8100 4710	3/4"	1007902		EA	30		$5.38	stock
G	135	TEE; HIGH DENSITY 8100 4710	1"	1007910		EA	20		$5.98	stock
G	136	TEE; HIGH DENSITY 8100 4710	1 1/4"	1007917		EA	4		$8.43	stock
G	137	TEE; HIGH DENSITY 8100 4710	2"	1006426		EA	20		$8.09	stock
G	138	TEE; HIGH DENSITY 8100 4710	3"	1007933		EA	4		$15.41	stock
G	139	TEE; HIGH DENSITY8100 4710	4"	1006434		EA	20		$23.59	2-4 weeks
G	140	TEE; HIGH DENSITY 8100 4710	6"	1006442		EA	6		$60.98	4-6 weeks
G	141	ELBOW; 90 D HIGH DENSITY 8100 4710	2"	1006422		EA	10		$5.99	in stock
G	142	ELBOW; 90 D HIGH DENSITY 8100 4710	3"	1007932		EA	10		$12.72	in stock
G	143	ELBOW; 90 D HIGH DENSITY 8100 4710	4"	1006432		EA	10		$17.24	4-6 weeks
G	144	ELBOW; 90 D HIGH DENSITY 8100 4710	6"	1006440		EA	10		$47.11	4-6 weeks
G	145	ELBOW; 45 D HIGH DENSITY 8100 4710	4"	1006430		EA	10		$ NB	NB
GAS	ITEM #	DESCRIPTION	SIZE	APPROVED PART #	ALTERNATE PART #	UNIT	EST QTY FY 26/27	BIDDER	UNIT PRICE	ESTIMATED DELIVERY TIME
		BOLT ON STEEL TAPPING SADDLE								
G	149	TAPPING SADDLE; STEEL, CONTINENTAL	1 1/4"	1315-15-1013-00		EA	4	G + C	$438.39	stock
G	150	TAPPING SADDLE; STEEL, CONTINENTAL	2" X 3/4"	1315-17-1013-00		EA	4		$389.15	stock
G	151	TAPPING SADDLE; STEEL, CONTINENTAL	2" X 1"	1315-17-1014-00		EA	4		$543.50	stock
G	152	TAPPING SADDLE; STEEL, CONTINENTAL	2 1/2" X 1"			EA	4		NB	NB
G	153	TAPPING SADDLE; STEEL, CONTINENTAL	3" X 1""	1315-19-1014-00		EA	4		$504.84	4 weeks
G	154	TAPPING SADDLE; STEEL, CONTINENTAL	4" X 1"	1315-21-1014-00		EA	4		$577.64	4-6 weeks
G	155	TAPPING SADDLE; STEEL, CONTINENTAL	6" X 1"	1315-24-1014-00		EA	4		NB	NB
GAS	ITEM #	DESCRIPTION	SIZE	APPROVED PART #	ALTERNATE PART #	UNIT	EST QTY FY 26/27	BIDDER	UNIT PRICE	ESTIMATED DELIVERY TIME
		LYCOFIT FITTINGS								
G	160	REDUCER; LYCOFIT	3/4" X 1/2"	LCY060Y010B-RR		EA	10	G + C	$42.36	2-4 weeks
G	161	TEE; LYCOFIT	3/4"	LCO60Y-3TR		EA	25		$60.70	stock
G	162	TEE; LYCOFIT	1"	LC070Y-3TR		EA	20		$55.07	stock
G	163	TEE; LYCOFIT	2"	LC200Y-3TR		EA	20		$130.70	stock
G	164	LYCO CAP	3/4"	LC060Y ECR		EA	50		$21.44	stock
G	165	LYCO CAP	1"	LC070Y-ECR		EA	20		$39.41	stock
G	166	LYCO CAP	2"	LC200Y-ECR		EA	10		$85.28	2 weeks
G	167	COUPLING; LYCOFIT	3/4"	LC 060 Y-DER		EA	100		$22.29	stock
G	168	COUPLING; LYCOFIT	1/2"	LC 010 B-DER		EA	10		$14.56	2 weeks
G	169	COUPLING; LYCOFIT	1"	LC 070Y-DER		EA	50		$20.04	2 weeks
G	170	COUPLING; LYCOFIT	1 1/4"	LCO80X-DESR		EA	10		$ NB	NB
G	171	COUPLING; LYCOFIT	2"	LC200Y-DESR		EA	40		$118.70	stock
G	172	COUPLING; LYCOFIT REPAIR	2"	LC 200Y-DER		EA	15		$109.47	stock
GAS	ITEM #	DESCRIPTION	SIZE	APPROVED PART #	ALTERNATE PART #	UNIT	EST QTY FY 26/27	BIDDER	UNIT PRICE	ESTIMATED DELIVERY TIME

GAS MATERIALS BID LIST 2025-2026

		POLYVALVES								
G	177	POLYVALVE; KEROTEST FULL PORT, 4710	1"	99051111	PERFECTION 45011	EA	10	G + C	$ 41.40	Stock
G	178	POLYVALVE; KEROTEST FULL PORT, 4710	1 1/4"	99051211	PERFECTION 45172	EA	5		$ 32.40	Stock
G	179	POLYVALVE; KEROTEST FULL PORT, 4710	2"	99052011	PERFECTION 46001	EA	25		$ 88.20	Stock
G	180	POLYVALVE; KEROTEST FULL PORT, 4710	3'	99053011	PERFECTION 47016	EA	5		$ 198.00	Stock
G	181	POLYVALVE; KEROTEST FULL PORT, 4710	4"	99054011	PERFECTION 47010	EA	25		$ 264.00	Stock
G	182	POLYVALVE; KEROTEST FULL PORT, 4710	6"	99056011	PERFECTION 48000	EA	5		$ 586.80	Stock

GAS	ITEM #	DESCRIPTION	SIZE	APPROVED PART #	ALTERNATE PART #	UNIT	EST QTY FY 26/27	BIDDER	UNIT PRICE	ESTIMATED DELIVERY TIME
		TRANSITION FITTINGS								
G	187	TRANSITION FITTING; STEEL - ELSTER PERFECTION	3/4" X 1/2"	700303		EA	5	G + C	NB	
G	188	TRANSITION FITTING; STEEL - ELSTER PERFECTION	3/4" X 3/4"	700901		EA	5		NB	
G	189	TRANSITION FITTING; STEEL - ELSTER PERFECTION	1" X 1"	701301		EA	5		NB	
G	190	TRANSITION FITTING; STEEL - ELSTER PERFECTION	2" X 2"	702730		EA	5		NB	
G	191	TRANSITION FITTING; STEEL - ELSTER PERFECTION	3" X 3"	702903		EA	5		NB	
G	192	TRANSITION FITTING; STEEL - ELSTER PERFECTION	4" X 4"	703129		EA	5		NB	
G	193	TRANSITION FITTING; STEEL - ELSTER PERFECTION	6" X 6"	704116		EA	5		NB	

GAS	ITEM #	DESCRIPTION	SIZE	APPROVED PART #	ALTERNATE PART #	UNIT	EST QTY FY 26/27	BIDDER	UNIT PRICE	ESTIMATED DELIVERY TIME
		DRESSER COUPLINGS								
G	207	COUPLING; ARMORED COMPRESSION, DRESSER	3/4" X 6"	0900-0001-082		EA	5		$ 34.59	Stock
G	208	COUPLING; ARMORED COMPRESSION, DRESSER	1" X 6"	0090-0002-082		EA	5		$ 36.10	Stock
G	209	COUPLING; ARMORED COMPRESSION, DRESSER	1 1/4" X 6"	0090-0003-082		EA	5		$ 38.96	2-4 weeks
G	210	COUPLING; ARMORED COMPRESSION, DRESSER	1 1/2" X 6"	0090-0004-082		EA	5		$ 50.16	Stock
G	211	COUPLING; ARMORED COMPRESSION, DRESSER	2" X 6"	0090-0005-082		EA	5		$ 57.13	Stock
G	212	COUPLING; ARMORED COMPRESSION, DRESSER	3/4" X 12"	0090-0090-082		EA	5		NB	
G	213	COUPLING; ARMORED COMPRESSION, DRESSER	1" X 12"	0090-0091-082		EA	5		$ 90.66	2-4 weeks
G	214	COUPLING; ARMORED COMPRESSION, DRESSER	1 1/4" X 12"	0090-0092-082		EA	5		$ 96.64	Stock
G	215	COUPLING; ARMORED COMPRESSION, DRESSER	1 1/2" X 12"	0090-0093-082		EA	5		$ 107.79	2-4 weeks
G	216	COUPLING; ARMORED COMPRESSION, DRESSER	2" X 12"	0090-0094-082		EA	5		$ 137.04	2-4 weeks
G	217	COUPLING; ARMORED COMPRESSION TEE, DRESSER	3/4"	0090-0710-082		EA	5		$ 60.88	Stock
G	218	COUPLING; ARMORED COMPRESSION TEE, DRESSER	1"	0090-0711-082		EA	5		$ 127.98	Stock

GAS	ITEM #	DESCRIPTION	SIZE	APPROVED PART #	ALTERNATE PART #	UNIT	EST QTY FY 26/27	BIDDER	UNIT PRICE	ESTIMATED DELIVERY TIME
		WELD TAP TEES								
G	223	MUELLER WELD ON TAP	3/4"	H - 17500 3/4"		EA	5	G + C	$ 42.88	Stock
G	224	MUELLER WELD ON TAP	1"	H - 17500 1"		EA	5		$ 50.75	Stock
G	225	MUELLER WELD ON TAP	2"	H - 17500 2"		EA	5		$108.50	2 weeks

GAS	ITEM #	DESCRIPTION	SIZE	APPROVED PART #	ALTERNATE PART #	UNIT	EST QTY FY 26/27	BIDDER	UNIT PRICE	ESTIMATED DELIVERY TIME
		VALVE BOXES								
G	230	TALL VALVE BOX WITH LIDS; SIGMA		562-S-G		EA	50		$101.88	stock
G	231	SHORT VALVE BOX WITH LIDS; SIGMA		461-S-G		EA	10		$78.23	stock

G	232	VALVE BOX EXTENSION; SIGMA	1"	VBR-1		EA	25		$ 29.34	2 weeks
G	233	VALVE BOX EXTENSION; SIGMA	1.5"	VBR 1.5		EA	25		$ 29.34	2 weeks
G	234	VALVE BOX EXTENSION; SIGMA	2"	VBR - 2		EA	30		$ 38.78	stock
G	235	VALVE BOX EXTENSION; SIGMA	3"	VBR -3		EA	25		$ 43.75	stock
G	236	VALVE BOX EXTENSION; SIGMA	4"	VBR - 4		EA	25		$ 59.60	stock
G	237	VALVE BOX EXTENSION; SIGMA	6"	VBR - 6		EA	25		$ 73.78	stock
		HIGHLIGHTED PORTION IS ALSO ON THE WATER BID (W-500-505)		***PLEASE BID ON WATER (W-500-505)* AS WELL***	***PLEASE BID ON WATER (W-500-505)* AS WELL***					
GAS	**ITEM #**	**DESCRIPTION**	**SIZE**	**APPROVED PART #**	**ALTERNATE PART #**	**UNIT**	**EST QTY FY 26/27**	**BIDDER**	**UNIT PRICE**	**ESTIMATED DELIVERY TIME**
		METAL INSERTS								
G	243	METAL STIFFNER INSERTS, ELSTER PERFECTION	3/4" X 6"	74201		EA	5	G + C	$9.90	stock
G	244	METAL STIFFNER INSERTS, ELSTER PERFECTION	1" X 6"	74203		EA	5		$9.90	stock
G	245	METAL STIFFNER INSERTS, ELSTER PERFECTION	1 1/4" x 6"	74204		EA	5		$11.30	stock
G	246	METAL STIFFNER INSERTS, ELSTER PERFECTION	1 1/2" x 6"	74206		EA	5		$13.30	stock
G	247	METAL STIFFNER INSERTS, ELSTER PERFECTION	2" X 6"	74205		EA	5	G + C	$14.15	stock
G	248	METAL STIFFNER INSERTS, ELSTER PERFECTION	3" X 6"	74210		EA	5		$28.90	2-6 weeks
GAS	**ITEM #**	**DESCRIPTION**	**SIZE**	**APPROVED PART #**	**ALTERNATE PART #**	**UNIT**	**EST QTY FY 26/27**	**BIDDER**	**UNIT PRICE**	**ESTIMATED DELIVERY TIME**
		MAGNESIUM ANODES								
G	253	ANODES, MAG	5#	ANODE - 5		EA	5	G + C	$99.23	stock
G	254	ANODES, MAG	17#	ANODE - 7		EA	5		$276.30	2-6 weeks
GAS	**ITEM #**	**DESCRIPTION**	**SIZE**	**APPROVED PART #**	**ALTERNATE PART #**	**UNIT**	**EST QTY FY 26/27**	**BIDDER**	**UNIT PRICE**	**ESTIMATED DELIVERY TIME**
		TRACER WIRE								
G	259	TRACER WIRE - 12 GAUGE COPPER (500' ROLLS)		KRIS-TECH WIRE CW0177500	TW-12Y-500	FT	30000	G + C	$0.31	stock
GAS	**ITEM #**	**DESCRIPTION**	**SIZE**	**APPROVED PART #**	**ALTERNATE PART #**	**UNIT**	**EST QTY FY 26/27**	**BIDDER**	**UNIT PRICE**	**ESTIMATED DELIVERY TIME**
		ELECTROFUSION								
G	262	COUPLING; CENTRAL 4710 HDPE	1" X 1"	5760006		EA	30	G + C	$8.15	stock
G	263	COUPLING; CENTRAL 4710 HDPE	2" X 2"	5760012		EA	20		$10.55	stock
G	264	COUPLING; CENTRAL 4710 HDPE	3"	5757007		EA	10		$20.43	stock
G	265	COUPLING; CENTRAL 4710 HDPE	4"			EA	20		$32.44	stock
G	266	COUPLING; CENTRAL 4710 HDPE	6"			EA	10		$79.28	2-4 weeks
G	267	COUPLING; CENTRAL-REDUCING 4710 HDPE	1" X 3/4"			EA	50		$14.16	stock
G	268	COUPLING; CENTRAL-REDUCING 4710 HDPE	1" X 1/2"			EA	10		$14.16	stock
G	269	COUPLING; CENTRAL-TAP TEE 4710 HDPE	2" x 3/4"				200		$43.42	stock
G	270	COUPLING; CENTRAL-TAP TEE 4710 HDPE	2" X 1"			EA	100		$32.20	stock
G	271	COUPLING; CENTRAL- TAP TEE 4710 HDPE	3" x 1"			EA	20		$31.94	stock
G	272	COUPLING; CENTRAL-TAP TEE 4710 HDPE	4" x 3/4"				100		$40.87	stock
G	273	COUPLING; CENTRAL-TAP TEE 4710 HDPE	4" X 1"			EA	100		$39.73	stock
G	274	COUPLING; CENTRAL-TAP TEE 4710 HDPE	6" X 1"			EA	20		$51.81	stock
G	275	COUPLING; CENTRAL-TAP TEE-HV 4710 HDPE	2" X 2"			EA	20		$132.16	2-4 weeks

GAS	ITEM #	DESCRIPTION	SIZE	APPROVED PART #	ALTERNATE PART #	UNIT	EST QTY FY 26/27	BIDDER	UNIT PRICE	ESTIMATED DELIVERY TIME
G	277	COUPLING; CENTRAL-TAP TEE-HV 4710 HDPE	3" X 2"			EA	10	G + C	$135.67	stock
G	278	COUPLING; CENTRAL-TAP TEE-HV 4710 HDPE	4" X 2"			EA	10		$141.79	stock
G	279	COUPLING; CENTRAL-TAP TEE-HV 4710 HDPE	6" X 2"			EA	10		$143.53	2-4 weeks
		EXCESS FLOW VALVES								
G	299	EXCESS FLOW VALVE SDR 11 IPS 4710 DRISCO 8300 SERIES 700	3/4"	UMAC IPS SDR11 8300 BFS/700 EFV	50098GB	EA	250	G + C	$36.23	2-4 weeks
G	300	EXCESS FLOW VALVE SDR 11 IPS PLEXO 4710 SERIES 1800	1"	UMAC SERIES 1800 GREEN LABEL		EA	15		$199.38	4-6 weeks
G	301	EXCESS FLOW VALVE SDR 11 IPS PLEXO 4710 SERIES 2600	1"	UMAC SERIES 2600 PINK LABEL		EA	10		$199.38	4-6 weeks

DUE TO THE UNSTABLE
MARKET AND FLUCTUATING
MANUFACTURING COST, YOUR PRICE
MAY BE SUBJECT TO CHANGE
CALL 1-800-238-3836 TO
CONFIRM PRICE

GAS METER BID LIST 2025-2026

GAS	ITEM #	DESCRIPTION	SIZE	APPROVED PART #	ALTERNATE PART #	UNIT	EST QTY FY 26/27	BIDDER	UNIT PRICE	ESTIMATED DELIVERY TIME
		PREFABRICATED GAS ROTARY METER SETS								
G	7	METER SET; 3.5M ROTARY METER SET - WITHOUT METER/EVC	3.5M/3M	SEE DRAWING	N/A	EA	6	NB		
G	8	METER SET; 5.5M ROTARY METER SET - WITHOUT METER/EVC	5.5M/5M	SEEDRAWING	N/A	EA	2	NB		
G	9	METER SET; 9 M ROTARY METER SET - WITHOUT METER/EVC	9M/7M	SEE DRAWING	N/A	EA	2			
G	10	METER SET; 14 M ROTARY METER SET - WITHOUT METER/EVC	14M/11-16M	SEE DRAWING	N/A	EA	3	NB		

GAS	ITEM #	DESCRIPTION	SIZE	APPROVED PART #	ALTERNATE PART #	UNIT	EST QTY FY 26/27	BIDDER	UNIT PRICE	ESTIMATED DELIVERY TIME
		DIAPHRAM GAS METERS								
G	15	METERS, AC 250 TC; ELSTER/AMERICAN - 5# CASE, 4 DIGIT ODM. INDEX; 20LT	AC 250	AC 250 TC 6" C-C	SENSUS R-275 TC 6" C-C	EA	250	NB		
G	16	METERS, AL 425 TC; ELSTER/AMERICAN - 10# CASE, 4 DIGIT ODM.INDEX; 30LT	AL 425	AL 425 TC 8.25" C-C	SENSUS R-415 TC 8.25" C-C	EA	150			
G	17	METERS, AC 630 TC; ELSTER/AMERICAN - 25# CASE, 4 DIGIT ODM. INDEX; 45 LT	AC 630	AC 630 TC 8.25" C-C	SENSUS SONIX 600 TC 6" C-C	EA	12	NB		
G	18	METERS, AL 800 TC; ELSTER/AMERICAN - 20# CASE, 5 DIGIT ODM. INDEX; 45 LT	AL 800	AL 800 TC 11" C-C	SENSUS SONIX 880 TC 6" C-C	EA	4	NB		
G	19	METERS, AL 1000 TC; ELSTER AMERICAN - 25# CASE, 5 DIGIT ODM. INDEX; 45 LT	AL 1000	AL 1000 TC 11" C-C	N/A	EA	2	NB		

GAS	ITEM #	DESCRIPTION	SIZE	APPROVED PART #	ALTERNATE PART #	UNIT	EST QTY FY 26/27	BIDDER	UNIT PRICE	ESTIMATED DELIVERY TIME
		ROTARY GAS METERS								
G	23	3.5M RABO/ROOTS ROTARY METER,W/TCI INDEX, 5 DIGIT, CCF,THERMO-WELL W/GASKET AND BOLT INTSALL KIT,GASKET STRAINER,FULL FACE,RUBBER W/SS 40 MESH	3.5M/3M	G65/TCIRAB-BD-B1A-FAFA-GA-AA0CACACA-0000-00	B3:3M175 ROOTS	EA	6	NB		
G	24	5.5M RABO/ROOTS ROTARY METER,W/TCI INDEX,5 DIGIT CCF ,THERMO-WELLW/GASKET AND BOLT INSTALL KIT,GASKET STRAINER,FULL FACE,RUBBER W/SS 40 MESH	5.5M/5M	G100/TCIRAB-BD-B1A-FAFA-GA-AA0CACACA-0000-00	B3:5M175 ROOTS	EA	2	NB		
G	25	9 M RABO/ROOTS ROTARY METER, W/TCI INDEX ,5 DIGIT CCF,THERMO-WELL W/GASKET AND BOLT INSTALL KIT,GASKET STRAINER,FULL FACE,RUBBER W/SS 40 MESH	9M/7M	G160/TCIRAB-BD-B1A-FAFA-GA-AA0CACACA-0000-00	B3:7M175 ROOTS	EA	2	NB		
G	26	14 M RABO/ROOTS ROTARY METER,W/TCI INDEX,5 DIGIT CCF ,THERMO-WELL W/ GASKET AND BOLT INSTALL KIT,GASKET STRAINER,FULL FACE,RUBBER W/SS 40 MESH	14M/11M	G250/TCIRAB-BD-B1A-FAFA-GA-AA0CACACA-0000-00	B3:11M175 ROOTS	EA	1	NB		
G	26A	16M RABO/ROOTS ROTARY METER,W/TCI INDEX, 5 DIGIT, CCF,THERMO-WELL W/GASKET AND BOLT INTSALL KIT,GASKET STRAINER,FULL FACE,RUBBER W/SS 40 MESH	16M		B3:16M175 ROOTS	EA	2	NB		
		* ALL ROTARY METERS SHALL COME WITH AMR MOUNTING BRACKET		22-1929						

GAS	ITEM #	DESCRIPTION	SIZE	APPROVED PART #	ALTERNATE PART #	UNIT	EST QTY FY 26/27	BIDDER	UNIT PRICE	ESTIMATED DELIVERY TIME
		TURBINE GAS METERS								

GAS METER BID LIST 2025-2026

GAS	ITEM #	DESCRIPTION	SIZE	APPROVED PART #	ALTERNATE PART #	UNIT	EST QTY FY 26/27	BIDDER	UNIT PRICE	ESTIMATED DELIVERY TIME
G	27	METER, SENSUS T-18	4"	T-18		EA	1	NB		
G	28	METER, SENSUS AAT -18	4"	AAT-18		EA	1	NB		
G	29	METER, SENSUS AAT - 27	6"	AAT-27		EA	1	NB		
G	30	METER, SENSUS AAT - 57	6"	ATT-57		EA	1			
G	31	METER;SENSUS AAT-60	8"	ATT-60		EA	1	NB		
GAS	ITEM #	DESCRIPTION	SIZE	APPROVED PART #	ALTERNATE PART #	UNIT	EST QTY FY 26/27	BIDDER	UNIT PRICE	ESTIMATED DELIVERY TIME
		ELECTRONIC CORRECTORS								
G	37	HONEYWELL EC-350 CORRECTOR W/10' DRIVE, 0-60PSI PRESSURE & TEMP		EC350-C0B-00200000-A-B15110-A1-MW,N3-200	EAGLE MPII MVC,INDEX.0-102PSI-TEMP#MVC-0047M1	EA	3	NB		
G	38	HONEYWELL EC-350 CORRECTOR W/100' DRIVE, 0-300PSI PRESSURE & TEMP		EC350-E0B-00200000-A-B15110-A1-MW,N3-200	EAGLE MPII MVC,INDEX.0-290PSI-TEMP#MVC-0048M1	EA	1	NB		
G	39	HONEYWELL TC-INDEX, FOR AMCO C-BODY ROTARY METERS		TCIAMC-BD-B1A-FAFA-BA-AA0AEBA0A-0000-00		EA	1	NB		
G	40	HONEYWELL TC-INDEX, FOR ROOTS B3 & ROMET 3000 ROTARY METERS		TCIDB3-BD-B2A-FAFA-BA-AA0AEBA0A-0000-00		EA	1	NB		
G	41	HONEYWELL TC-INDEX, FOR ROOTS B5 & ROMET 5000 ROTARY METERS		TCIRMT-BD-B2A-FAFA-BA-AAOAEBA0A-0000-00		EA	1	NB		
G	42	HONEYWELL TC-INDEX, FOR RABO ROTARY METERS		TCIRAB-BD-B1A-FAFA-GA-AA0CACACA-0000-00		EA	1	NB		
G	43	HONEYWELL TURBO CORRECTOR		TCSCMB-AAAA-AKAB0-OOAOO-A6AAB7-AAAABO-AFAGA-BACOE-OOO-000-OOOOO-C2		EA	1	NB		
GAS	ITEM #	DESCRIPTION	SIZE	APPROVED PART #	ALTERNATE PART #	UNIT	EST QTY FY 26/27	BIDDER	UNIT PRICE	ESTIMATED DELIVERY TIME
		METER BARS								
G	44	1" METER BARS 20LT AC-250 METERS	1" 20 LT	SEE DRAWING	N/A	EA	250	NB		
G	45	1.25 " METER BARS 30LT AL-425 METERS	1.25" 30LT	SEE DRAWING	N/A	EA	150			
G	50	METER BAR - METER BYPASS FOR AL-800 OR AL-1000 - 45 LT	45LT	SEE DRAWING	N/A	EA	4	NB		
G	51	METER BAR - METER BYPASS FOR AC-630 - 45 LT	45LT	SEE DRAWING	N/A	EA	2			
G	52	METER BAR - METER BYPASS FOR AL-425 - 30 LT	30LT	SEE DRAWING	N/A	EA	2	NB		
GAS	ITEM #	DESCRIPTION	SIZE	APPROVED PART #	ALTERNATE PART #	UNIT	EST QTY FY 26/27	BIDDER	UNIT PRICE	ESTIMATED DELIVERY TIME
		METER MANIFOLDS								
G	54	METER BAR - TWO METER MANIFOLD;		SEE DRAWING	N/A	EA	1	NB		
G	55	METER BAR - THREE METER MANIFOLD;		SEE DRAWING	N/A	EA	1	NB		
G	56	METER BAR - FOUR METER MANIFOLD;		SEE DRAWING	N/A	EA	1	NB		
G	57	METER BAR - FIVE METER MANIFOLD;		SEE DRAWING	N/A	EA	1	NB		
G	58	METER BAR - SIX METER MANIFOLD;		SEE DRAWING	N/A	EA	1	NB		
GAS	ITEM #	DESCRIPTION	SIZE	APPROVED PART #	ALTERNATE PART #	UNIT	EST QTY FY 26/27	BIDDER	UNIT PRICE	ESTIMATED DELIVERY TIME
		RESIDENTIAL REGULATORS								
G	63	REGULATOR; SENSUS/AMERCIAN	3/4" X 1"	1813C	143-80-2	EA	200	NB		
G	64	REGULATOR; SENSUS/AMERICAN	1" x 1"	1813C	143-80-2	EA	50	NB		
GAS	ITEM #	DESCRIPTION	SIZE	APPROVED PART #	ALTERNATE PART #	UNIT	EST QTY FY 26/27	BIDDER	UNIT PRICE	ESTIMATED DELIVERY TIME
		COMMERCIAL REGULATORS								
G	68	REGULATOR; FISHER	2"	299H		EA	5	NB		
G	69	REGULATOR; FISHER	2"	CS 400		EA	4	NB		
G	71	REGULATOR;FISHER HIGH CAP RELEIF 2.5"VENT	2"	CS820-IQ		EA	4	NB		

GAS METER BID LIST 2025-2026

GAS	ITEM #	DESCRIPTION	SIZE	APPROVED PART #	ALTERNATE PART #	UNIT	EST QTY FY 26/27	BIDDER	UNIT PRICE	ESTIMATED DELIVERY TIME
		FARM TAP REGULATORS/RELIEFS								
G	75	REGULATOR, FARM TAP; FISHER/BELGAS	3/4"	627R-101	R62706020002010	EA	1	NB		
G	76	REGULATOR; RELIEF; FISHER/BELGAS	1"	289H-49	P28908050000000	EA	1			
								NB		
GAS	ITEM #	DESCRIPTION	SIZE	APPROVED PART #	ALTERNATE PART #	UNIT	EST QTY FY 26/27	BIDDER	UNIT PRICE	ESTIMATED DELIVERY TIME
		ITRON MODULES								
G	81	ITRON MODULE FOR TOP MOUNT METERS		ERG-5006-007/008		EA	20	NB		
G	82	ITRON MODULE FOR AC 250-630 ,AL 425		ERG-5006-001		EA	250			
G	83	ITRON MODULE SENSUS 275		ERG-5006-002		EA	250	NB		
G	84	ITRON MODULE SENSUS 415		ERG-5006-004		EA	150			
G	85	ITRON MODULE FOR REMOTE MOUNT METERS W/ TCI		ERG-5006-502/503/505		EA	20	NB		

DUE TO THE UNSTABLE
MARKET AND FLUCTUATING
MANUFACTURING COST, YOUR PRIC
MAY BE SUBJECT TO CHANGE
CALL 1-800-238-3836 TO
CONFIRM PRICE

LEGAL NOTICE

INVITATION TO SUBMIT QUOTATIONS

The Town of Smyrna will accept quotations on the annual Gas, Water and Sewer materials for the Utilities Department. Bidders shall submit sealed quotations in the format specified in the Invitation to Submit Quotations no later than **2:00 p.m. May 19, 2026** at which time the bids will be publicly opened and read aloud. No bid may be withdrawn after the scheduled closing time for a period of 90 days. Bidding documents may be obtained at Smyrna Town Hall during regular business hours or www.townofsmyrna.org. Quotations should be mailed or hand delivered to:

Purchasing Department
Smyrna Town Hall
Sealed Bid on Annual Gas, Water & Sewer Materials
May 19 @ 2:00 p.m.
315 South Lowry Street
Smyrna, TN 37167

The Town of Smyrna will not discriminate in the purchase of all goods and services on the basis of race, color, religion, sex, national origin, age, disability or any other lawfully protected classification.

Verbal quotations, faxed quotations or quotations received after the closing date will not be accepted. The Town of Smyrna reserves the right to reject any and all bids, to waive technicalities or informalities and to accept any bid deemed to be in the best interest of the Town.

BY: Sierra Lowry
Finance Director

TO BE RUN: May 5, 2026

Hayes Pipe Supply, Inc.
COMPANY NAME

AGREEMENT

This Agreement is made and entered into as of this _____ day of _____, 20____, by and between _____, a _____ _____ (the "Bidder") and the Town of Smyrna, Tennessee, a Tennessee municipal corporation (the "Town") for the purpose of _____.

WHEREAS, the Bidder has submitted a quotation for the provision of certain products and/or services to the Town, all in accordance with the terms of the Invitation to Submit Quotations attached hereto and incorporated herein by reference as if set forth at length verbatim as Exhibit A (the "ISQ"), and which Proposal from the Bidder is attached hereto and incorporated herein by reference as if set forth at length verbatim as Exhibit B (the "Quotation"); the ISQ and the Quotation, together with any and all ancillary documents thereto, shall be collectively referred to herein as the "Bid Documents"; and

WHEREAS, the Town now desires to accept the Bidder's quotation, in accordance with the terms set forth in such Bid Documents.

NOW, THEREFORE, in consideration of the mutual covenants contained herein, and for other good and valuable consideration, the receipt and sufficiency of which is hereby acknowledged, the undersigned do hereby agree as follows:

1. Acceptance of Bid Documents. The terms of the Bid Documents, as incorporated herein by reference, are hereby accepted by the parties hereto. The Bidder hereby agrees to provide the goods and/or services contemplated by such Bid Documents in accordance with the terms set forth therein. The Town hereby accepts the Bidder's quotation to provide the goods and/or services contemplated by such Bid Documents in accordance with the terms set forth therein.

2. Entire Agreement. This Agreement, including the exhibits and any other documents referred to herein or therein, which form a part hereof, contains the entire understanding of the parties with respect to its subject matter. There are no restrictions, agreements, promises, warranties, covenants or undertakings other than those expressly set forth herein or therein. This Agreement supersedes all prior written or oral agreements and understandings between the parties with respect to its subject matter and may not be altered, modified or amended, in whole or in part, except by the express written authorization and consent of the parties hereto.

IN WITNESS WHEREOF, the undersigned have executed this Agreement as of the date set forth above.

TOWN OF SMYRNA, TENNESSEE

By: _____
Name: Mary Esther Reed
Title: Mayor

ATTEST:

_____
Amber Hobbs, Town Clerk

BIDDER:

By: _____
Title: _____

ATTEST:

_____

SECTION III - SPECIFICATIONS COMPLIANCE

Unless otherwise noted, all quotations for the annual gas, water and sewer materials shall be in complete accordance with the specifications detailed herein.

Bidders shall note in the space provided below any exceptions or deviations in any way from the specifications of any section of this ISQ. Bidders should provide complete detail of exceptions or deviations.

Proposal Exceptions

Section	Brief Description
	See attached paperwork with exceptions and notes

By signature below, vendor acknowledges any quotation to be in full compliance with all aspects of each section of the ISQ not noted above. The undersigned hereby declares that no person or party other than the undersigned has any interest whatever in this proposal, that it is without any connection or collusion with any person or persons making or having made any proposal for the same work and without any previous understanding with such person or persons as to relative prices, obviating competition, and that it is made in good faith.

Hayes Pipe Supply, Inc
COMPANY

615-427-3801
TELEPHONE NUMBER

Andy Clarkson
REPRESENTATIVE NAME

Municipal Sales
REPRESENTATIVE TITLE

Andy Clarkson
SIGNATURE

aclarkson@hayespipe.com
E-MAIL ADDRESS

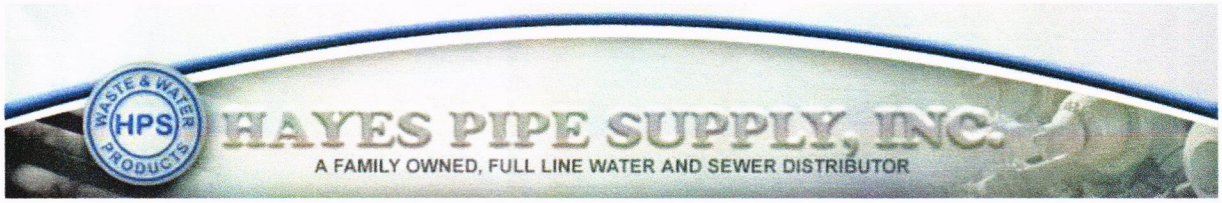

Smyrna Water Dept. Annual Water Bid

5-19-2026

Hayes Pipe Supply, Inc.

Ford Meter Box brass fittings bid as an approved part on setters, brass fittings, compression fittings, male adapters, corporation stops, curb stops.

Ford Meter Box pricing valid thru 6/30/2027

SIGMA meter boxes and lids bid as spec.

Sigma Meter boxes and lids pricing valid thru 12/31/2026, and will be subject to new price at time of purchase.

Smith-Blair was quoted for Repair Clamps

Smith-Blair clamps pricing valid thru 6/30/2027

Hymax clamps were bid as spec Krausz/Mueller

Hymax clamps pricing valid thru 12/31/2026, and will be subject to new price at time of purchase.

Municipex was bid as REAHU

Rheau municipex pricing valid for 120 days after bid date, and will be subject to new price at time of purchase.

Ductile Iron Pipe was bid as U.S. Pipe

U.S. Pipe prices valid thru 11/15/2026

U.S. Pipe 8" CL-350 w/401 protecto price valid for 60 days from bid date, and will be subject to new price at time of purchase.

SIGMA was bid on the fittings, PVC and CI/DI bolt packs

Sigma fittings, PVC and CI/DI bolt packs pricing valid thru 6/30/2027

American Hydrants were bid as an alternate

American pricing valid thru 12/31/2026, and will be subject to new price at time of purchase.

American Gate and Tapping Valves were bid as an alternate on 2"-16" in size

American pricing valid thru 12/31/2026, and will be subject to new price at time of purchase.

Concrete risers bid as Hula Concrete Products.

Hula pricing valid for 30 days from bid date, and will be subject to new price at time of purchase.

PVC Pipe was bid mainly as Sanderson Pipe, however with the volatility of the PVC resin market, others like National Pipe, Diamond Pipe, Westlake Pipe and JM Eagle might be substituted.

All PVC pipe pricing valid for 30 days from bid date, and will be subject to new price at time of purchase.

Blow off hydrants were bid as Kupferle

Kupferle pricing valid thru 6/30/2027

Merit Brass fittings were bid on the brass nipples, couplings, and 90's.

Merit Brass fittings pricing valid for 60 days from bid date, and will be subject to new price at time of purchase.

Watts proucts bid per spec

Watts pricing valid for 60 days from bid date, and will be subject to new price at time of purchase.

WATER	ITEM #	DESCRIPTION	SIZE	APPROVED PART #	ALTERNATE PART #	UNIT	EST. QTY. FY 26/27	BIDDER	UNIT PRICE	ESTIMATED DELIVERY TIME
		METER YOKES/ACCESSORIES								
W	1	METER RETROSETTER W/ 360° LOCKWING & DC; MUELLER (FORD ALTERNATE)	5/8" X 3/4"	203B2446-R5---N	RETRO-2CVBRHH-NL	EA	10	Hayes Pipe Supply	$210.59	3-5 weeks
W	2	METER RISER; RELOCATOR W/ 360° LOCKWING & DC; MUELLER (FORD ALTERNATE)	5/8" X 3/4" X 7"	234B24118R5---N	VBHH42-7WR-NL	EA	200	Hayes Pipe Supply	$202.33	3-5 weeks
W	3	METER RISER; RELOCATOR W/ 360° LOCKWING & DC; MUELLER (FORD ALTERNATE)	5/8" X 3/4" X 12"	238B24118R5---N	VBHH42-12W-NL	EA	10	Hayes Pipe Supply	$206.44	3-5 weeks
W	4	METER RISER RELOCATOR W/ 360° LOCKWING & DC; MUELLER (FORD ALTERNATE)	1" X 10"	389B24118R5---N	VBHH44-10W-NL	EA	80	Hayes Pipe Supply	$334.10	3-5 weeks
W	5	METER RISER; RELOCATOR W/ 360° LOCKWING & DC; MUELLER (FORD ALTERNATE)	1.5" X 14"	063B2424--5N	VBRHH46-14R-NL	EA	5	Hayes Pipe Supply	$1,576.90	3-5 weeks
W	6	METER RISER; RELOCATOR W/ 360° LOCKWING & DC; MUELLER (FORD ALTERNATE)	2" X 14"	087B2424--5N	VBRHH47-14R-NL	EA	10	Hayes Pipe Supply	$1,646.47	3-5 weeks
W	7	METER RISER; RELOCATOR W/360° LOCKWING & DC; FORD W/BYPASS	2" X 14"	1-VBHH47-14B-NL	VBHH47-14B-NL	EA	2	Hayes Pipe Supply	$1,734.96	3-5 weeks
W	9	METER SWIVEL 2.5L; FORD	5/8" X 3/4" X 3/4"x 2.5" LONG	C38-23-2.5-NL	MUELLER H-10890N	EA	200	Hayes Pipe Supply	$12.68	2 weeks
W	10	METER SWIVEL COUPLING ; FORD	5/8" x 3/4" x 3/4" x 2.25" LONG	C38-23-2.25-NL	MUELLER H-10890026	EA	5	Hayes Pipe Supply	$12.68	2 weeks
W	11	METER SWIVEL COUPLING STRAIGHT; FORD	1"	C38-44-2-625-NL	MUELLER H-10890	EA	80	Hayes Pipe Supply	$19.53	2 weeks
W	12	FLANGE PAK FOR METER - BRASS (BOX W/2)	1.5"	4415FSC	MATCO-NORCA LLC---432T07P	EA	8	Hayes Pipe Supply	$58.91	2 weeks
W	13	FLANGE PAK FOR METER - BRASS (BOX W/ 2)	2"	4420FSC	MATCO-NORCA LLC---432T08P	EA	10	Hayes Pipe Supply	$62.73	3-5 weeks
W	14	A-24 METER ADAPTOR; FORD	5/8" x 3/4" to 1"	A24-NL	or equal	EA	120	Hayes Pipe Supply	$32.39	3-5 weeks
W	15	A-47 FLANGED METER ADAPTOR; FORD (BOX W/ 2)	1" TO 2"	A47-NL	or equal	EA	5	Hayes Pipe Supply	$194.75	3-5 weeks
W	16	A-67 FLANGED METER ADAPTOR; FORD (BOX W/2)	1.5" TO 2"	A67-NL	or equal	EA	5	Hayes Pipe Supply	$280.19	3-5 weeks

WATER	ITEM #	DESCRIPTION	SIZE	APPROVED PART #	ALTERNATE PART #	UNIT	EST. QTY. FY 26/27	BIDDER	UNIT PRICE	ESTIMATED DELIVERY TIME
		WATER REGULATORS								
W	17	REGULATOR; WATTS	3/4"	LF25AUB-Z3		EA	4	Hayes Pipe Supply	$185.62	3 weeks
W	18	REGULATOR; WATTS	1"	1LF25AUB-Z3		EA	4	Hayes Pipe Supply	$294.78	6-8 week
W	19	REGULATOR; ZURN WILKINS	3/4"	MODEL 70XL		EA	2	Hayes Pipe Supply	$269.25	1-2 weeks

WATER	ITEM #	DESCRIPTION	SIZE	APPROVED PART #	ALTERNATE PART #	UNIT	EST. QTY. FY 26/27	BIDDER	UNIT PRICE	ESTIMATED DELIVERY TIME
		WATER MOUDLE								
W	21	ITRON UNIVERSAL MOUDLE W/ LID MOUNTING KIT	UNIVERSAL	RW-1350-001 100W+/CFG-1601-00	n/a	EA	275	Hayes Pipe Supply	No Bid	
W	22	ITRON UNIVERSAL LEAK SENSOR	UNIVERSAL	LDS-1601-001	n/a	EA	10	Hayes Pipe Supply	No Bid	
W	23	CELLULAR 500W MODULE W/ LID MOUNTING KIT	UNIVERSAL	ECW-1700-001/CFG-1601-001	n/a	EA	100	Hayes Pipe Supply	No Bid	

WATER	ITEM #	DESCRIPTION	SIZE	APPROVED PART #	ALTERNATE PART #	UNIT	EST. QTY. FY 26/27	BIDDER	UNIT PRICE	ESTIMATED DELIVERY TIME
		METERS AND PARTS								
W	24	METER CIB/HRE/USG W/ ITRON CONNECTOR; BADGER	5/8" X 3/4"	MODEL 25LL (NSF 61-G MTR)	n/a	EA	200	Hayes Pipe Supply	No Bid	
W	25	METER CIB/HRE/USG W/ ITRON CONNECTOR; BADGER	1"	MODEL 70 LL (NSF 61-G MTR)	n/a	EA	80	Hayes Pipe Supply	No Bid	
W	26	METER CIB/HRE/USG W/ ITRON CONNECTOR; BADGER	1.5	MODEL 120 LL (NSF 61-G-MTR)	n/a	EA	4	Hayes Pipe Supply	No Bid	
W	27	METER ELLIPTICALW/T. PLUG HRE/USG W/ ITRON CONNECTOR W/ D. P.; BADGER	2"	MODEL 170 LL (NSF 61- G-MTR)	n/a	EA	6	Hayes Pipe Supply	No Bid	
W	28	METER BOTTOMS FOR BADGER METER; BADGER	5/8" X 3/4"	57799 - 001	n/a	EA	25	Hayes Pipe Supply	No Bid	
W	29	METER BOTTOMS FOR BADGER METER	1"	59293 - 002	n/a	EA	10	Hayes Pipe Supply	No Bid	
W	37	CHAMBER for M70 BADGER METER	1"	33334-032	n/a	EA	5	Hayes Pipe Supply	No Bid	
W	38	CHAMBER for M120 BADGER METER	1.5"	33334-017	n/a	EA	5	Hayes Pipe Supply	No Bid	
W	39	CHAMBER forM170 BADGER METER	2"	33334-028	n/a	EA	5	Hayes Pipe Supply	No Bid	
W	40	RETROFIT REGISTER w/ ITRON CONNECTOR; BADGER	5/8" X 3/4"	M25/RETRO/RT	n/a	EA	400	Hayes Pipe Supply	No Bid	
W	41	RETROFIT REGISTER w/ ITRON CONNECTOR; BADGER	1"	M70/RETRO/RT	n/a	EA	6	Hayes Pipe Supply	No Bid	
W	42	RETROFIT REGISTER w/ ITRON CONNECTOR; BADGER	1.5"	M120/RETRO/RT	n/a	EA	2	Hayes Pipe Supply	No Bid	
W	43	RETROFIT REGISTER w/ ITRON CONNECTOR; BADGER	2"	M170/RETRO/RT	n/a	EA	4	Hayes Pipe Supply	No Bid	

WATER	ITEM #	DESCRIPTION	SIZE	APPROVED PART #	ALTERNATE PART #	UNIT	EST. QTY. FY 26/27	BIDDER	UNIT PRICE	ESTIMATED DELIVERY TIME
		ULTRASONIC METERS AND PARTS								
W	44	NEPTUNE METER W/ 5' ITRON CONNECTOR in 100 USG	2" x 17"	EU2E1G1SG61		EA	4	Hayes Pipe Supply	No Bid	
W	45	NEPTUNE METER W/ 25' ITRON CONNECTOR in 100 USG W/ FLANGE PAKS	3"X 12"	EU3A1G1SG61		EA	2	Hayes Pipe Supply	No Bid	
W	46	NEPTUNE METER W/ 25' ITRON CONNECTOR in 100 USG W/ FLANGE PAKS	4" X 14"	EU3C1G1SG61		EA	2	Hayes Pipe Supply	No Bid	
W	47	NEPTUNE METER W/ 25' ITRON CONNECTOR in 100 USG W/ FLANGE PAKS	6" X 18"	EU3E1G1SG61		EA	3	Hayes Pipe Supply	No Bid	

WATER	ITEM #	DESCRIPTION	SIZE	APPROVED PART #	ALTERNATE PART #	UNIT	EST. QTY. FY 26/27	BIDDER	UNIT PRICE	ESTIMATED DELIVERY TIME
		METER BOXES AND LIDS								
W	48	SIGMA RMB-132418-SW W/ LC1324T-D READ DOOR AND RECESS TOUCH READ HOLE	5/8" x 3/4" meters	RMB- 132418-SW	OLD CASTLE 1324X18 /DI65-45-12	EA	50	Hayes Pipe Supply	$167.86	1-2 Weeks
W	49	SIGMA RMB-173018-SW W/ LC1730T-D READ DOOR AND RECESS TOUCH READ HOLE	1" - 2" meters	RMB- 173018-SW	OLD CASTLE 1730X18/DI65-45-12	EA	25	Hayes Pipe Supply	$263.52	1-2 Weeks
W	50	SIGMA LID ONLY LC1324T-D READ DOOR AND RECESS TOUCH READ HOLE	5/8" x 3/4" meters	RMB-1324-L-RT	TRI CAST LID DI 6545-12 W/ READ DOOR /TRANS HOLE1324	EA	10	Hayes Pipe Supply	$75.84	1-2 Weeks
W	51	SIGMA LID ONLY LC1730T-D READ DOOR AND RECESS TOUCH READ HOLE	1" - 2" meters	RMB-1730-L-RT	TRI CAST LID DI 6545-12 W/ READ DOOR /TRANS HOLE1730	EA	10	Hayes Pipe Supply	$129.55	1-2 Weeks
W	55	CI SOLID METER BOX LID W/ ITRON TR HOLE FOR BROOKS 36H15 METER BOX LID ONLY	CI SOLID LID FOR BROOKS 36HI5	LC 223T ITRON	n/a	EA	25	Hayes Pipe Supply	$28.13	1-2 Weeks
		HOLE		LC1324T-D/1730T-D	Tricast DI w/ read door /trans hole 1324/1730			Hayes Pipe Supply		

WATER	ITEM #	DESCRIPTION	SIZE	APPROVED PART #	ALTERNATE PART #	UNIT	EST. QTY. FY 26/27	BIDDER	UNIT PRICE	ESTIMATED DELIVERY TIME
		VAULTS								
W	56	METER VAULT W/ ALUMINUM LID	2" METER VAULT	SEE DRAWING			2	Hayes Pipe Supply	No Bid	

WATER MATERIALS BID LIST 2025-2026

WATER	ITEM #	DESCRIPTION	SIZE	APPROVED PART #	ALTERNATE PART #	UNIT	EST. QTY. FY 26/27	BIDDER	UNIT PRICE	ESTIMATED DELIVERY TIME
		BRASS FITTINGS								
W	59	BRASS REDUCTION COUPLING	2" X 1.5"	B-RC0807		EA	2	**Hayes Pipe Supply**	$25.86	Two weeks
W	60	ROUGH BRASS 45° COUPLING	1.5"	BR4L		EA	2	**Hayes Pipe Supply**	$17.83	Two weeks
W	61	ROUGH BRASS 90° COUPLING	1.5"	BR9L		EA	2	**Hayes Pipe Supply**	$16.15	Two weeks
W	64	FEMALE THREAD BALL VALVE; FORD	3/4"	B11-233W-NL		EA	10	**Hayes Pipe Supply**	$48.24	Two weeks
W	65	BRASS TEE	2"x2"x2"	NSF61-4		EA	10	**Hayes Pipe Supply**	$36.42	Two weeks
W	66	BRASS THREADED 90°; MATCO	2"	NSF61-4		EA	10	**Hayes Pipe Supply**	$26.29	Two weeks
W	67	BRASS THREADED STREET 90°; MATCO	2"	NSF61-4		EA	10	**Hayes Pipe Supply**	$39.22	Two weeks
W	68	THREADED COUPLING; MATCO	2"	NSF61-4		EA	10	**Hayes Pipe Supply**	$22.65	Two weeks
W	69	BRASS ALL-THREAD	1.5"			EA	2	**Hayes Pipe Supply**	$9.63	Two weeks
W	70	BRASS NIPPLE	1.5" X 6"	BRNLU		EA	2	**Hayes Pipe Supply**	$27.44	Two weeks
W	71	BRASS ALL THREAD; MATCO--NORCA	2"	NBR08CL		EA	20	**Hayes Pipe Supply**	$14.66	Two weeks
W	72	BRASS NIPPLE; MATCO-NORCA	2" X 6" LONG	NBR086		EA	10	**Hayes Pipe Supply**	$35.26	Two weeks
W	73	BRASS NIPPLE; BMI	2" X 12" LONG	7 77701049941		EA	10	**Hayes Pipe Supply**	$69.51	Two weeks
W	74	BRASS NIPPLE	2" X 18" LONG			EA	6	**Hayes Pipe Supply**	$107.63	Two weeks
W	75	BRASS NIPPLE	2" X 24" LONG			EA	6	**Hayes Pipe Supply**	$143.48	Two weeks
W	76	CHECK VALVE; RED & WHITE	1.5"	236AB 1 1/2		EA	4		No Bid	
W	77	CHECK VALVE; RED & WHITE	2"	236AB 2		EA	4		No Bid	
W	78	APOLLO BALL VALVE	2"	A94ALF10801A		EA	6		No Bid	

WATER	ITEM #	DESCRIPTION	SIZE	APPROVED PART #	ALTERNATE PART #	UNIT	EST. QTY. FY 26/27	BIDDER	UNIT PRICE	ESTIMATED DELIVERY TIME
		COMPRESSION FITTINGS								
W	82	COUPLING; FMLIP; FORD	FMLIP 3/4" X 3/4" CTS	C14-33-Q-NL		EA	5	**Hayes Pipe Supply**	$21.64	One week
W	83	COUPLING; FORD	3/4" CTS X 3/4" CTS	C44-33-Q-NL		EA	30	**Hayes Pipe Supply**	$24.99	One week
W	84	COUPLING; FORD	3/4" CTS PAK X 3/4" IP MALE	C84-33-Q-NL		EA	5	**Hayes Pipe Supply**	$20.57	One week
W	85	COUPLING; FORD	3/4" CTS PACK X 1" CTS PACK	C44-34-Q-NL		EA	30	**Hayes Pipe Supply**	$29.03	One week
W	86	COUPLING; FMLIP; FORD	FMLIP 1" X 1" CTS	C14-44-Q-NL		EA	15	**Hayes Pipe Supply**	$29.28	One week
W	87	COUPLING; FORD	1" CTS X 1" CTS	C44-44-Q-NL		EA	25	**Hayes Pipe Supply**	$28.58	One week
W	88	COUPLING; FORD	1" CTS X 1" I.P. MALE	C84-44-Q-NL		EA	6	**Hayes Pipe Supply**	$24.60	One week
W	89	COUPLING; FORD	2" CTS X 2" CTS JOINT PK	C44-77-Q-NL		EA	6	**Hayes Pipe Supply**	$128.41	One week
W	90	2" CTS X 2" IRON PIPE THREAD; FORD	2" CTS X 2" IRON PIPE THREAD	C84-77-Q-NL		EA	6	**Hayes Pipe Supply**	$97.21	One week
W	91	COUPLING; T'S ; FORD	3/4" X 3/4" X 3/4" CTS	T444-333-Q-NL		EA	20	**Hayes Pipe Supply**	$60.45	2 weeks
W	92	COUPLING; T'S ; FORD	3/4" X 3/4" X 1" CTS	T444-443-Q-NL		EA	10	**Hayes Pipe Supply**	$66.41	2 weeks
W	93	COUPLING; T'S; FORD	1" X 1" X 3/4"	T444-443-AWT-Q-NL	Ford recommneds using T44-443-Q-NL	EA	5	**Hayes Pipe Supply**	$66.58	2-3 weeks
W	94	COUPLING; T'S; FORD	1" X 1" X 1" CTS PAK JOINT	T444-444-Q-NL		EA	5	**Hayes Pipe Supply**	$64.86	2 weeks
W	95	BALL VALVE; FORD	3/4"	B44-233W-Q-NL		EA	20	**Hayes Pipe Supply**	$58.93	2 weeks
W	96	BALL VALVE; FORD	1"	B44-344W-Q-NL		EA	20	**Hayes Pipe Supply**	$118.05	2 weeks
W	97	COUPLING; "Y"; FORD	3/4" X 3/4" X 1" CTS	Y44-243-Q-NL		EA	25	**Hayes Pipe Supply**	$51.70	2 weeks
W	98	90° COUPLING; FORD	3/4"	L44-33-Q-NL		EA	5	**Hayes Pipe Supply**	$32.37	2 weeks
W	99	90° COUPLING; FORD	1"	L44-44-Q-NL		EA	5	**Hayes Pipe Supply**	$41.57	2 weeks
W	100	Q -NUT ASSEMBLY	3/4"	QJN4-3		EA	20	**Hayes Pipe Supply**	$9.29	2 weeks
W	101	Q-NUT ASSEMBLY	1"	QJN4-4		EA	20	**Hayes Pipe Supply**	$11.38	2 weeks
W	102	FEMALE COPPER THREAD GRIP JOINT; FORD	3/4" X 3/4" CTS	C04-33-Q-NL		EA	5	**Hayes Pipe Supply**	$23.19	2-3 weeks
W	103	FEMALE COPPER THREAD GRIP JOINT; FORD	1" X 1" CTS	C04-44-Q-NL		EA	5	**Hayes Pipe Supply**	$34.09	2-3 weeks
W	104	PAK J ASSEMBLY; FORD	1" FEMALE X 3/4" CTS	C08-43-NL		EA	5	**Hayes Pipe Supply**	$21.15	2-3 weeks
W	105	COUPLING SWIVEL 45 DEGREE; FORD	3/4"X3/4"	LA04-33S-Q-NL		EA	5	**Hayes Pipe Supply**	$36.59	2-3 weeks
W	106	COUPLING SWIVEL 45 DEGREE; FORD	1"X1"	LAO4-44S-Q-NL		EA	5	**Hayes Pipe Supply**	$51.60	2-3 weeks
W	107	COUPLING SWIVEL 90 DEGREE; FORD	3/4"X3/4"	L04-33S-Q-NL		EA	5	**Hayes Pipe Supply**	$40.87	2-3 weeks
W	108	COUPLING SWIVEL 90 DEGREE; FORD	1"X1"	L04-44S-Q-NL		EA	5	**Hayes Pipe Supply**	$55.75	2-3 weeks
W	109	MULTI SERVICE Y NL 1-2" FMLIP X 4-1" FMLIP	2"X1"	Y11-474-NL		EA	5	**Hayes Pipe Supply**	$100.15	2-3 weeks

WATER	ITEM #	DESCRIPTION	SIZE	APPROVED PART #	ALTERNATE PART #	UNIT	EST. QTY. FY 26/27	BIDDER	UNIT PRICE	ESTIMATED DELIVERY TIME
		CURB STOPS								
W	113	CURB STOP W/360 DEGREE LOCKING WINGNUT; FORD	3/4"	B43-232WR-Q-NL		EA	200	**Hayes Pipe Supply**	$58.19	One week
W	114	CURB STOP W/360 DEGREE LOCKING WINGNUT; FORD	1"	B43-344WR-Q-NL		EA	25	**Hayes Pipe Supply**	$107.03	One week
W	115	BALL VALVE PAD WING/CURB STOP; FORD	1.5"	BF13-666W-NL		EA	4	**Hayes Pipe Supply**	$233.95	2-3 weeks
W	116	BALL VALVE PAD WING/CURB STOP; FORD	2"	BF13-777W-NL		EA	4	**Hayes Pipe Supply**	$373.04	2-3 weeks
W	117	BALL VALVE PAD WING W/COMPRESSION FITTING; FORD	2"	BF43-777W-Q-NL		EA	6	**Hayes Pipe Supply**	$419.43	2-3 weeks

WATER	ITEM #	DESCRIPTION	SIZE	APPROVED PART #	ALTERNATE PART #	UNIT	EST. QTY. FY 26/27	BIDDER	UNIT PRICE	ESTIMATED DELIVERY TIME
		CORP STOPS								
W	122	CORPORATION STOP; FORD	3/4" TAPER X 3/4" CTS	FB1000-3-Q-NL		EA	10	**Hayes Pipe Supply**	$61.99	One week
W	123	CORPORATION STOP; FORD	1" CC TAPER x 1"CTS	FB1000-4-Q-NL		EA	20	**Hayes Pipe Supply**	$80.95	One week
W	124	CORPORATION STOP, IRON PIPE THREADS; FORD	1" IP THREAD X1" CTS	FB1100-4-Q-NL		EA	5	**Hayes Pipe Supply**	$80.95	One week

WATER	ITEM #	DESCRIPTION	SIZE	APPROVED PART #	ALTERNATE PART #	UNIT	EST. QTY. FY 26/27	BIDDER	UNIT PRICE	ESTIMATED DELIVERY TIME
		TAPPING SADDLES								
W	143	TAPPING SADDLE; SMITH BLAIR	2" X 3/4" (2.35-2.56)	315-00025607-000		EA	5	**Hayes Pipe Supply**	$29.17	3-4 weeks
W	144	TAPPING SADDLE; SMITH BLAIR	2" X 1" (2.35-2.56)	315-00025609-000		EA	4	**Hayes Pipe Supply**	$29.70	3-4 weeks
W	145	TAPPING SADDLE; SMITH BLAIR	2-1/4" X 3/4" (2.44-2.91)	315-00029107-000		EA	5	**Hayes Pipe Supply**	$52.02	3-4 weeks
W	146	TAPPING SADDLE; SMITH BLAIR	2-1/4" X 1" (2.44-2.91)	315-00029109-000		EA	5	**Hayes Pipe Supply**	$29.76	3-4 weeks

W	149	TAPPING SADDLE; SMITH BLAIR	4" X 3/4" (4.40-4.80)	315-00048007-000		EA	4	Hayes Pipe Supply	$29.11	3-4 weeks
W	151	TAPPING SADDLE; SMITH BLAIR	4" X 1" (4.40-4.80)	315-00048009-000		EA	4	Hayes Pipe Supply	$29.11	3-4 weeks
W	155	TAPPING SADDLE; SMITH BLAIR	4" X 2" (4.40-4.80)	315-00048014-000		EA	4	Hayes Pipe Supply	$36.47	3-4 weeks
W	158	TAPPING SADDLE; SMITH BLAIR	6" X 3/4" (6.84-7.60)	315-00076007-000		EA	5	Hayes Pipe Supply	$34.25	3-4 weeks
W	160	TAPPING SADDLE ; SMITH BLAIR	6" X 1" (5.94-6.90)	315-00069009-000		EA	5	Hayes Pipe Supply	$33.71	3-4 weeks
W	161	TAPPING SADDLE; SMITH BLAIR	6" X 1" (6.84-7.60)	315-00076009-000		EA	5	Hayes Pipe Supply	$34.25	3-4 weeks
W	163	TAPPING SADDLE; SMITH BLAIR	6" X 2" (5.94-6.90)	315-00069014-000		EA	5	Hayes Pipe Supply	$39.62	3-4 weeks
W	165	TAPPING SADDLE ; SMITH BLAIR	6"x2" (6.84-7.60)	315-00076014-000		EA	5	Hayes Pipe Supply	$40.13	3-4 weeks
W	166	TAPPING SADDLE ; SMITH BLAIR	8" X 3/4" (8.54-10.10)	315-00101007-000		EA	5	Hayes Pipe Supply	$40.67	3-4 weeks
W	167	TAPPING SADDLE; SMITH BLAIR	8" X 1" (8.54-10.10)	315-00101009-000		EA	4	Hayes Pipe Supply	$40.67	3-4 weeks
W	171	TAPPING SADDLE; SMITH BLAIR	8" X 2" (8.54-10.10)	315-00101014-000		EA	2	Hayes Pipe Supply	$48.32	3-4 weeks
W	175	TAPPING SADDLE; SMITH BLAIR	10" X 2" (10.64-12.12)	315-00121214-00		EA	4	Hayes Pipe Supply	$54.28	3-4 weeks
W	176	TAPPING SADDLE; SMITH BLAIR	12" X 3/4" (12.64-14.32)	315-00143207-000		EA	2	Hayes Pipe Supply	$51.39	3-4 weeks
W	178	TAPPING SADDLE; SMITH BLAIR	12" X 1" (12.62-14.32)	315-00143209-000		EA	2	Hayes Pipe Supply	$51.39	3-4 weeks
W	180	TAPPING SADDLE; SMITH BLAIR	12"-14"X 2" (12.62-14.32)	315-00143214-000		EA	2	Hayes Pipe Supply	$64.76	3-4 weeks
W	181	TAPPING SADDLE; SMITH BLAIR	16"- X 2" (17.25-17.80)	317-00178014-000		EA	2	Hayes Pipe Supply	$140.57	3-4 weeks
W	182	TAPPING SADDLE; SMITH BLAIR	16"- X 2" (17.25-17.80)	317-00195014-000		EA	2	Hayes Pipe Supply	$183.35	3-4 weeks
W	183	TAPPING SADDLE:SMITH BLAIR	20"X2" (21.55-21.65)	317-00216014-000		EA	2	Hayes Pipe Supply	$213.16	3-4 weeks
W	184	TAPPING SADDLE; SMITH BLAIR	24" X 2" (25.75-25.85)	317-00258014-000		EA	2	Hayes Pipe Supply	$242.63	3-4 weeks

WATER	ITEM #	DESCRIPTION	SIZE	APPROVED PART #	ALTERNATE PART #	UNIT	EST. QTY. FY 26/27	BIDDER	UNIT PRICE	ESTIMATED DELIVERY TIME
		REPAIR CLAMPS								
W	188	REPAIR CLAMP; SMITH BLAIR	3/4" X 6" FL CIR	244-00013206-000		EA	2	Hayes Pipe Supply	$40.46	3-4 weeks
W	189	REPAIR CLAMP; SMITH BLAIR	1" X 6" FL CIR (PVC)	244-00016609-000		EA	2	Hayes Pipe Supply	$17.77	3-4 weeks
W	190	REPAIR CLAMP; SMITH BLAIR	1-1/4" X 6"	244-00019006-000		EA	4	Hayes Pipe Supply	$41.76	3-4 weeks
W	191	REPAIR CLAMP; SMITH BLAIR	1.5" X 6" FL CIR (PVC)			EA	4	Hayes Pipe Supply	No Bid	3-4 weeks
W	192	REPAIR CLAMP; SMITH BLAIR	2" X 7" FL CIR (2.35-2.63)	226-00023807-000		EA	8	Hayes Pipe Supply	$43.69	3-4 weeks
W	193	REPAIR CLAMP; SMITH BLAIR	2.5" X 7" FL CIR (2.70-3.00)	226-00027507-000		EA	6	Hayes Pipe Supply	$44.73	3-4 weeks
W	194	REPAIR CLAMP; SMITH BLAIR	2" X 12.5" FL CIR (2.35-2.63)	226-00023812-000		EA	2	Hayes Pipe Supply	$73.31	3-4 weeks
W	195	REPAIR CLAMP; SMITH BLAIR	2.5" X 12" FL CIR (2.70-3.00)	226-00027512-000		EA	2	Hayes Pipe Supply	$77.02	3-4 weeks
W	196	REPAIR CLAMP; SMITH BLAIR	2" X 15" (2.35-2.63)	226-00023815-000		EA	2	Hayes Pipe Supply	$84.58	3-4 weeks
W	197	REPAIR CLAMP; SMITH BLAIR	2" X 25" (2.35-2.63)	226-00023825-000		EA	2	Hayes Pipe Supply	$151.02	3-4 weeks
W	198	REPAIR CLAMP; SMITH BLAIR	2.25" X 25" (2.70-3.00)	226-00027525-000		EA	2	Hayes Pipe Supply	$162.07	3-4 weeks
W	199	REPAIR CLAMP; SMITH BLAIR	3" X 7.5" FL CIR (3.73-4.00)	226-00037507-000		EA	2	Hayes Pipe Supply	$50.13	3-4 weeks
W	200	REPAIR CLAMP; SMITH BLAIR	3" X 12" FL CIR (3.46-3.70)	226-00035012-000		EA	2	Hayes Pipe Supply	$81.21	3-4 weeks
W	201	REPAIR CLAMP; SMITH BLAIR	4" X 7.5" FL CIR (3.96-4.25)	226-00040007-000		EA	2	Hayes Pipe Supply	$51.93	3-4 weeks
W	202	REPAIR CLAMP; SMITH BLAIR	4" X 7.5" FL CIR (4.45-4.73)	226-00045007-000		EA	2	Hayes Pipe Supply	$53.76	3-4 weeks
W	203	REPAIR CLAMP; SMITH BLAIR	4" X 7.5" FL CIR (4.74-5.14)	226-00048007-000		EA	6	Hayes Pipe Supply	$55.65	3-4 weeks
W	204	REPAIR CLAMP; SMITH BLAIR	4 X 12.5" FL CIR (4.74-5.14)	226-00048012-000		EA	2	Hayes Pipe Supply	$91.18	3-4 weeks
W	205	REPAIR CLAMP; SMITH BLAIR	4 X 15" FL CIR (PVC) (4.74-5.14)	226-00048015-000		EA	2	Hayes Pipe Supply	$109.99	3-4 weeks
W	207	REPAIR CLAMP; SMITH BLAIR	6" X 7" FL CIR (6.84-7.24)	226-00069007-000		EA	10	Hayes Pipe Supply	$65.66	3-4 weeks
W	208	REPAIR CLAMP; SMITH BLAIR	6" X 7.5" FL CIR (6.56-6.96)	226-00066307-000		EA	4	Hayes Pipe Supply	$64.24	3-4 weeks
W	210	REPAIR CLAMP; SMITH BLAIR	6" X 12" FL CIR (6.56-6.96)	226-00066312-000		EA	2	Hayes Pipe Supply	$103.50	3-4 weeks
W	211	REPAIR CLAMP; SMITH BLAIR	6" X 12" FL CIR (6.84-7.24)	226-00069012-000		EA	4	Hayes Pipe Supply	$105.02	3-4 weeks
W	212	REPAIR CLAMP; SMITH BLAIR	6" X 12.5" (7.05-7.45)	226-00071012-000		EA	2	Hayes Pipe Supply	$106.74	3-4 weeks
W	213	REPAIR CLAMP; SMITH BLAIR	6" X 15" FL CIR (6.56-6.96)	226-00066315-000		EA	2	Hayes Pipe Supply	$116.49	3-4 weeks
W	214	REPAIR CLAMP; SMITH BLAIR	6" X 15" (6.84-7.24)	226-00069015-000		EA	2	Hayes Pipe Supply	$122.05	3-4 weeks
W	215	REPAIR CLAMP; SMITH BLAIR	6" X 15" (7.05-7.45)	226-00071015-000		EA	2	Hayes Pipe Supply	$123.63	3-4 weeks
W	217	REPAIR CLAMP; SMITH BLAIR	8" X 7" FL CIR (8.54-8.94)	226-00086307-000		EA	4	Hayes Pipe Supply	$76.14	3-4 weeks
W	218	REPAIR CLAMP; SMITH BLAIR	8" X 7" FL CIR (8.99-9.39)	226-00090507-000		EA	8	Hayes Pipe Supply	$78.50	3-4 weeks
W	219	REPAIR CLAMP; SMITH BLAIR	8" X 12" FL CIR (8.99-9.39, DIP)	226-00090512-000		EA	2	Hayes Pipe Supply	$125.79	3-4 weeks
W	220	REPAIR CLAMP; SMITH BLAIR	8" X 15" (8.54-8.94)	226-00086315-000		EA	2	Hayes Pipe Supply	$145.57	3-4 weeks
W	221	REPAIR CLAMP; SMITH BLAIR	8" X 15" (8.99-9.39)	226-00090515-000		EA	2	Hayes Pipe Supply	$149.88	3-4 weeks
W	222	REPAIR CLAMP; SMITH BLAIR	10" X 15" FL CIR (DIP) (11.04-11.44)	226-00111015-000		EA	2	Hayes Pipe Supply	$187.16	3-4 weeks
W	223	REPAIR CLAMP; SMITH BLAIR	10" X 20" (11.04-11.44)	226-00114020-000		EA	2	Hayes Pipe Supply	$259.39	3-4 weeks
W	224	REPAIR CLAMP; SMITH BLAIR	12" X 7" FL CIR (13.10-13.50)	226-00132007-000		EA	2	Hayes Pipe Supply	$107.83	3-4 weeks
W	225	REPAIR CLAMP; SMITH BLAIR	12" X 12" FL CIR (DIP) (13.10-13.50)	226-00132012-000		EA	2	Hayes Pipe Supply	$177.59	3-4 weeks
W	226	REPAIR CLAMP; SMITH BLAIR	12' X 15' FL CIR (DIP) (13.10 - 13.50)	226-00132015-000		EA	2	Hayes Pipe Supply	$220.67	3-4 weeks
W	227	REPAIR CLAMP; SMITH BLAIR	16" X 15" (17.15-17.90)	228-20171515-000		EA	2	Hayes Pipe Supply	$458.07	3-4 weeks
W	229	REPAIR CLAMP; SMITH BLAIR	16" X 20" FL CIR (17.15-17.90)	228-20178220-000		EA	2	Hayes Pipe Supply	$631.98	3-4 weeks
W	230	REPAIR CLAMP; SMITH BLAIR	16" X 30" (17.15-17.90)	228-20171530-000		EA	2	Hayes Pipe Supply	$940.39	3-4 weeks
W	231	REPAIR CLAMP; SMITH BLAIR	18" X 20" FL CIR (19.23-19.98)	228-20192320-000		EA	2	Hayes Pipe Supply	$655.05	3-4 weeks
W	232	REPAIR CLAMP; SMITH BLAIR	20" X 20" (21.52-22.27)	228-20215220-000		EA	2	Hayes Pipe Supply	$692.50	3-4 weeks
W	233	REPAIR CLAMP; SMITH BLAIR	24" X 30" FL CIR (25.70-26.80)	228-30257030-000		EA	2	Hayes Pipe Supply	$1,795.35	3-4 weeks
W	234	REPAIR CLAMP; SMITH BLAIR	24" X 20" FL CIR (25.70-26.80)	228-30257020-000		EA	2	Hayes Pipe Supply	$1,186.53	3-4 weeks
W	237	REPAIR CLAMP; SMITH BLAIR W/1" CC TAP	6"X7.5" W/1" TAP (6.84-7.24)	238-00069007-009		EA	2	Hayes Pipe Supply	$94.39	3-4 weeks
W	238	REPAIR CLAMP; SMITH BLAIR W/1" CC TAP	8"X7.5" W/ 1" TAP (8.99-9.39)	238-00090507-009		EA	2	Hayes Pipe Supply	$107.59	3-4 weeks

WATER	ITEM #	DESCRIPTION	SIZE	APPROVED PART #	ALTERNATE PART #	UNIT	EST. QTY. FY 26/27	BIDDER	UNIT PRICE	ESTIMATED DELIVERY TIME
		HYMAX								
W	240	HYMAX; KRAUSZ	1.5" (1.61-2.13)	860-56-0041-16	Quoted Hymax part# 860-54-0041-16	EA	4			2 weeks
W	241	HYMAX; KRAUSZ	2" (2.10-3.03)	860-56-0054-16	Quoted Hymax part# 860-54-0054-16	EA	4			2 weeks
W	242	HYMAX; KRAUSZ	3" (3.46-4.33)	860-56-0088-16	Quoted Hymax part# 860-54-0088-16	EA	4			2 weeks
W	243	HYMAX; KRAUSZ	4" (4.25-5.63)	860-56-0108-16C	Quoted Hymax part# 860-54-0108-16	EA	4			2 weeks
W	244	HYMAX; KRAUSZ	6" (6.42-7.68)	860-56-0163-16	Quoted Hymax part# 860-54-0163-16	EA	10			2 weeks
W	245	HYMAX; KRAUSZ	8" (8.54-9.84)	860-56-0217-16	Quoted Hymax part# 860-54-0217-16	EA	10			2 weeks
W	246	HYMAX; KRAUSZ	10" (10.70 - 12.00)	860-56-0272-16	Quoted Hymax part# 860-54-0272-16	EA	2			2-4 weeks
W	247	HYMAX; KRAUSZ	12" (12.40-13.66)	860-56-0315-16	Quoted Hymax part# 860-54-0315-16	EA	2			2-4 weeks

WATER MATERIALS BID LIST 2025-2026

WATER	ITEM #	DESCRIPTION	SIZE	APPROVED PART #	ALTERNATE PART #	UNIT	EST. QTY. FY 26/27	BIDDER	UNIT PRICE	ESTIMATED DELIVERY TIME
		PIPE								
W	254	PEX PIPE; REHAU 300 ft. Roll	3/4"	261056-100	n/a	FT	2000	**Hayes Pipe Supply**	.925'	One week
W	255	PEX PIPE; REHAU 300 ft. roll	1"	261076-300	n/a	FT	4000	**Hayes Pipe Supply**	1.40'	One week
W	256	PEX PIPE; REHAU 300 ft. roll	2"		n/a	FT	300	**Hayes Pipe Supply**	8.67'	Two weeks
W	258	CL-350 DUCTILE IRON WATER PIPE W/ BITUMINOUS SEAL COATING INSIDE & OUTSIDE	3"	CL-350	CL-54 as CL-350 not made in 3" DIP	FT	60	**Hayes Pipe Supply**	73.78'	One week
W	263	CL-350 DUCTILE IRON WATER PIPE W/ BITUMINOUS SEAL COATING INSIDE & OUTSIDE	12"	CL-350	n/a	FT	40	**Hayes Pipe Supply**	56.08'	One week
W	264	CL-350 DUCTILE IRON WATER PIPE W/ BITUMINOUS SEAL COATING INSIDE & OUTSIDE	16"	CL-350	n/a	FT	40	**Hayes Pipe Supply**	89.07'	2-3 weeks
W	265	CL-350 DUCTILE IRON WATER PIPE W/ BITUMINOUS SEAL COATING INSIDE & OUTSIDE	18"	CL-350	n/a	FT	40	**Hayes Pipe Supply**	105.04'	2-3 weeks
W	266	CL-350 DUCTILE IRON WATER PIPE W/ BITUMINOUS SEAL COATING INSIDE & OUTSIDE	24"	CL-350	n/a	FT	40	**Hayes Pipe Supply**	166.83'	2-3 weeks
W	267	CL-350 DUCTILE IRON WATER PIPE W/ BITUMINOUS SEAL COATING INSIDE & OUTSIDE	36"	CL-350	n/a	FT	40	**Hayes Pipe Supply**	385.42'	2-3 weeks
W	268	C900 WATER PIPE SDR 14	4"	C-900		FT	100	**Hayes Pipe Supply**	6.61'	One week
W	269	C900 WATER PIPE SDR 14	6"	C-900		FT	200	**Hayes Pipe Supply**	13.14'	One week
W	270	C900 WATER PIPE SDR 14	8"	C-900		FT	200	**Hayes Pipe Supply**	22.62'	One week
W	271	C900 WATER PIPE SDR 14	10"	C-900		FT	40	**Hayes Pipe Supply**	34.47'	Two weeks
W	273	SDR 11, 2" IPS BLACK WATER PIPE	2"	SDR-11	SDR-9 IPS BLACK WATER PIPE	FT	100	**Hayes Pipe Supply**	1.94'	Two weeks

WATER	ITEM #	DESCRIPTION	SIZE	APPROVED PART #	ALTERNATE PART #	UNIT	EST. QTY. FY 26/27	BIDDER	UNIT PRICE	ESTIMATED DELIVERY TIME
		PIPE FITTINGS								2 eeks
W	277	PIPE STIFFENER (PLASTIC)	3/4"			EA	1000	**Hayes Pipe Supply**	$0.38	One week
W	278	PIPE STIFFENER (PLASTIC)	1"			EA	2000	**Hayes Pipe Supply**	$0.43	One week
W	279	PIPE INSERT; FORD # 55 STAINLESS STELL	2"			EA	14	**Hayes Pipe Supply**	$3.29	One week
W	293	CAP; TYLER	2"			EA	2	**Hayes Pipe Supply**	$73.11	One week
W	294	CAP; TYLER	3"			EA	2	**Hayes Pipe Supply**	$37.94	One week
W	295	CAP; TYLER	4"			EA	2	**Hayes Pipe Supply**	$37.94	One week
W	296	CAP; TYLER	4" X 2"			EA	2	**Hayes Pipe Supply**	$80.69	One week
W	297	CAP; TYLER	6"			EA	2	**Hayes Pipe Supply**	$68.97	One week
W	298	CAP; TYLER	6" X 2"			EA	2	**Hayes Pipe Supply**	$110.35	One week
W	299	CAP; TYLER	8"			EA	2	**Hayes Pipe Supply**	$112.42	One week
W	300	CAP; TYLER	8" X 2"			EA	2	**Hayes Pipe Supply**	$153.11	One week
W	345	ANCHOR COUPLING; TYLER	6" X 13" LONG			EA	6	**Hayes Pipe Supply**	$273.80	One week
W	346	ANCHOR COUPLING; TYLER	6" X 18" LONG			EA	6	**Hayes Pipe Supply**	$302.07	One week
W	347	ANCHOR COUPLING; TYLER	6" X 24" LONG			EA	6	**Hayes Pipe Supply**	$419.09	One week

WATER	ITEM #	DESCRIPTION	SIZE	APPROVED PART #	ALTERNATE PART #	UNIT	EST. QTY. FY 26/27	BIDDER	UNIT PRICE	ESTIMATED DELIVERY TIME
		ACCESSORIES								
W	389	M.J. ACC KIT; UFCO	3"	912-096-5892	Sigma DGP3	EA	4	**Hayes Pipe Supply**	$25.81	One week
W	390	M.J. ACC KIT; SIGMA	4"	DGP 4"	Sigma DGP4	EA	5	**Hayes Pipe Supply**	$33.55	One week
W	391	M.J. BOLT PACK SET	6"	SIP 6"	Sigma MGP6	EA	10	**Hayes Pipe Supply**	$29.68	One week
W	392	M.J. BOLT PACK SET	8"	SIP 8"	Sigma MGP8	EA	4	**Hayes Pipe Supply**	$33.55	One week
W	393	M.J. ACC KIT; SIGMA	10"	DGP 10		EA	2	**Hayes Pipe Supply**	$71.62	One week
W	394	M.J. ACC KIT	12"		Sigma DGP12	EA	4	**Hayes Pipe Supply**	$73.55	One week
W	395	M.J. ACC KIT	16"		Sigma DGP16	EA	4	**Hayes Pipe Supply**	$120.00	One week
W	397	TRANSITION GASKET	4"		Sigma TG4	EA	4	**Hayes Pipe Supply**	$10.33	One week
W	398	TRANSITION GASKET	6"		Sigma TG6	EA	8	**Hayes Pipe Supply**	$10.33	One week
W	399	TRANSITION GASKET	8"		Sigma TG8	EA	6	**Hayes Pipe Supply**	$14.84	One week
W	400	MEGALUG D. I.; FORD	3"	UFR 1500-SA-3-I	Sigma SLDEP3	EA	4	**Hayes Pipe Supply**	$44.39	One week
W	401	MEGALUG AND ACC KIT (D I); SIGMA	4"	829,805,219,567	Sigma SLDEP4	EA	4	**Hayes Pipe Supply**	$48.09	One week
W	402	MEGALUG AND ACC KIT (D I); SIGMA	6"	UFR 1400-DA-6	Sigma SLDEP6	EA	4	**Hayes Pipe Supply**	$59.65	One week
W	403	MEGALUG AND ACC KIT (D I); EBAA	8"	110 804 1903	Sigma SLDEP8	EA	2	**Hayes Pipe Supply**	$81.38	One week
W	404	MEGALUG AND ACC KIT (D I); EBAA	10"	1,110,041,903	Sigma SLDEP10	EA	2	**Hayes Pipe Supply**	$115.13	One week
W	405	MEGALUG AND ACC KIT (D I); FORD	12"	UFR 1400-DA-12-I	Sigma SLDEP12	EA	2	**Hayes Pipe Supply**	$154.90	One week
W	406	MEGALUG AND ACC KIT (D I)	16"		Sigma SLDEP16	EA	4	**Hayes Pipe Supply**	$277.89	1-2 Weeks
W	407	MEGALUG AND ACC KIT (D I)	24"		Sigma SLDEP24	EA	2	**Hayes Pipe Supply**	$620.96	1-2 Weeks
W	408	MEGALUG AND ACC KIT (D.I.)	36"		Sigma SLDE-XP36	EA	2	**Hayes Pipe Supply**	$1,826.35	1-2 Weeks
W	412	MEGALUG AND ACC KIT (C900); SIGMA	4"	829,805,219,864	Sigma SLCEP4	EA	10	**Hayes Pipe Supply**	$55.49	One week
W	413	MEGALUG AND ACC KIT (C900); SIGMA	6"	829 805 219 871	Sigma SLCEP6	EA	40	**Hayes Pipe Supply**	$69.36	One week
W	414	MEGALUG AND ACC KIT (C900); SIGMA	8"	829 805 219 888	Sigma SLCEP8	EA	30	**Hayes Pipe Supply**	$93.40	One week
W	415	C900 MEGALUG; EBAA	10"	2,010,161,903	Sigma SLCEP10	EA	6	**Hayes Pipe Supply**	$162.76	One week
W	416	C900 MEGALUG; SIGMA	12"	829 052 199 01	Sigma D-SLCEP12	EA	6	**Hayes Pipe Supply**	$198.37	One week
W	417	MEGALUG AND ACC KIT ((DI)	18"		Sigma SLDEP18	EA	4	**Hayes Pipe Supply**	375..45	1-2 Weeks
W	418	MEGALUG AND ACC KIT (D I)	20"		Sigma SLDEP20	EA	4	**Hayes Pipe Supply**	$458.21	1-2 Weeks

WATER	ITEM #	DESCRIPTION	SIZE	APPROVED PART #	ALTERNATE PART #	UNIT	EST. QTY. FY 26/27	BIDDER	UNIT PRICE	ESTIMATED DELIVERY TIME
		VALVES								
W	423	GATE VALVE - THREADED; KENNEDY	2"	228D2X	American Flow Control 2500	EA	10	**Hayes Pipe Supply**	$503.20	One week
W	424	GATE VALVE; KENNEDY	3"	324,067,014,001	American Flow Control 2500	EA	2	**Hayes Pipe Supply**	$730.56	One week
W	425	GATE VALVE' M&H	4"	367,571,011,008	American Flow Control 2500	EA	2	**Hayes Pipe Supply**	$816.05	One week
W	426	GATE VALVE; M&H	6"	467,571,011,008	American Flow Control 2500	EA	5	**Hayes Pipe Supply**	$1,041.69	One week
W	427	TAPPING VALVE; MUELLER	6"	4,187,696	American Flow Control 2500	EA	2	**Hayes Pipe Supply**	$1,452.62	One week
W	428	GATE VALVE; MUELLER	8"	080A236023LN	American Flow Control 2500	EA	5	**Hayes Pipe Supply**	$1,657.57	One week
W	429	GATE VALVE	10"		American Flow Control 2500	EA	1	**Hayes Pipe Supply**	$2,610.96	One week
W	430	GATE VALVE; M&H	12"	587,571,011,008	American Flow Control 2500	EA	1	**Hayes Pipe Supply**	$3,269.99	One week
W	431	GATE VALVE; MUELLER	16"	11,505,876,777	American Flow Control 2500	EA	1	**Hayes Pipe Supply**	$16,618.57	4-6 weeks

WATER MATERIALS BID LIST 2025-2026

WATER	ITEM #	DESCRIPTION	SIZE	APPROVED PART #	ALTERNATE PART #	UNIT	EST. QTY. FY 26/27	BIDDER	UNIT PRICE	ESTIMATED DELIVERY TIME
		VALVE BOXES/RISERS								
W	436	SQUARE VALVE BOX CASTING & LID		JBS 8006		EA	15	Hayes Pipe Supply	$223.35	One week
W	437	SQUARE STEEL VALVE BOX RISER	1.5"	JBS 8006		EA	5	Hayes Pipe Supply	No Bid	
W	438	CONCRETE VALVE BOX RISER	2"		Hula Concrete	EA	15	Hayes Pipe Supply	$15.13	One week
W	439	CONCRETE VALVE BOX RISER	4"		Hula Concrete	EA	15	Hayes Pipe Supply	$18.35	One week
W	440	CONCRETE VALVE BOX RISER	6"		Hula Concrete	EA	15	Hayes Pipe Supply	$27.35	One week
W	441	CONCRETE VALVE BOX RISER	12"		Hula Concrete	EA	10	Hayes Pipe Supply	$38.73	One week
W	442	CONCRETE VALVE BOX RISER	18"		Hula Concrete	EA	10	Hayes Pipe Supply	$40.63	One week
W	500	VALVE BOX EXTENSION; SIGMA	1"	VBR-1		EA	25	Hayes Pipe Supply	$17.20	1-2 Weeks
W	501	VALVE BOX EXTENSION; SIGMA	1.5"	VBR-1.5		EA	25	Hayes Pipe Supply	$21.02	1-2 Weeks
W	502	VALVE BOX EXTENSION; SIGMA	2"	VBR-2		EA	30	Hayes Pipe Supply	$21.02	1-2 Weeks
W	503	VALVE BOX EXTENSION; SIGMA	3"	VBR-3		EA	25	Hayes Pipe Supply	$28.66	1-2 Weeks
W	504	VALVE BOX EXTENSION; SIGMA	4"	VBR-4		EA	25	Hayes Pipe Supply	$33.43	1-2 Weeks
W	505	VALVE BOX EXTENSION; SIGMA	6"	VBR-6		EA	25	Hayes Pipe Supply	$47.76	1-2 Weeks
		HIGHLIGHTED PORTION IS ALSO ON THE GAS BID (G-232-237)	***PLEASE ALSO BID ON GAS (G-232-237) AS WELL***	***PLEASE ALSO BID ON GAS (G-232-237) AS WELL***						

WATER	ITEM #	DESCRIPTION	SIZE	APPROVED PART #	ALTERNATE PART #	UNIT	EST. QTY. FY 26/27	BIDDER	UNIT PRICE	ESTIMATED DELIVERY TIME
		HYDRANTS								
W	448	BLOW OFF-ABOVE GROUND; KUPFERLE	2" STRAIGHT BURY	MODEL 77		EA	8	Hayes Pipe Supply	$928.98	5-8 weeks
W	449	BLOW OFF-BELOW GROUND; KUPFERLE	2" STRAIGHT BURY	MODEL 78		EA	5	Hayes Pipe Supply	$923.87	5-8 weeks
W	450	POST HYDRANT,	3' BURY, 3" MJ SHOE, 2-1/2" OUTLET	M&H MODEL 33	Kupferle Eclipse	EA	2	Hayes Pipe Supply	$1,526.69	6-9 weeks
W	451	FIRE HYDRANT ASSEMBLY; M&H YELLOW	5 1/4" 3' 6"bury	MODEL 129 3-Way 1 Pumper/2 Hose		EA	6	Hayes Pipe Supply	No Bid	
W	452	HYDRANT TRAFFIC REPAIR KIT ; MUELLER	5 1/4"	MUELLER HRP301		EA	5	Hayes Pipe Supply	No Bid	
W	453	HYDRANT TRAFFIC REPAIR KIT ; AMERICAN	5 1/4"	AMERICAN AD-B62B-KIT		EA	1	Hayes Pipe Supply	$650.73	1-2 weeks
W	454	HYDRANT TRAFFIC REPAIR KIT ; M&H	5 1/4"	M&H		EA	5	Hayes Pipe Supply	No Bid	
W	458	MUELLER EXTENSION KIT	5 1/4" X 6"			EA	1	Hayes Pipe Supply	No Bid	
W	459	MUELLER EXTENSION KIT	5 1/4" X 12"	A320-010		EA	1	Hayes Pipe Supply	No Bid	
W	460	MUELLER EXTENSION KIT	5 1/4" X 18"	A320-16		EA	1	Hayes Pipe Supply	No Bid	
W	461	MUELLER EXTENSION KIT	5 1/4" X 24"	A320-20		EA	1	Hayes Pipe Supply	No Bid	
W	462	M&H EXTENSION KIT	5 1/4" X 6"			EA	1	Hayes Pipe Supply	No Bid	
W	463	M&H EXTENSION KIT	5 1/4" X 12"	441129-5-12		EA	1	Hayes Pipe Supply	No Bid	
W	464	M&H EXTENSION KIT	5 1/4" X 18"	441129-5-18		EA	1	Hayes Pipe Supply	No Bid	
W	465	M&H EXTENSION KIT	5 1/4" X 24"	441129-5-24		EA	1	Hayes Pipe Supply	No Bid	

WATER	ITEM #	DESCRIPTION	SIZE	APPROVED PART #	ALTERNATE PART #	UNIT	EST. QTY. FY 26/27	BIDDER	UNIT PRICE	ESTIMATED DELIVERY TIME
		INSERT VALVE & SLEEVES								
W	480	INSERT VALVE & SLEEVE W/ INSTALLATION	6"	DRO-STOP INSTA-VALVE 250 PATRO	ROMAC	EA	1	Hayes Pipe Supply	No Bid	
W	481	INSERT VALVE & SLEEVE W/ INSTALLATION	8"	DRO-STOP INSTA-VALVE 250 PATRO	ROMAC	EA	1	Hayes Pipe Supply	No Bid	
W	482	INSERT VALVE & SLEEVE W/ INSTALLATION	10"	DRO-STOP INSTA-VALVE 250 PATRO	ROMAC	EA	1	Hayes Pipe Supply	No Bid	
W	483	INSERT VALVE &SLEEVE W/ INSTALLATION	12"	DRO-STOP INSTA-VALVE 250 PATRO	ROMAC	EA	1	Hayes Pipe Supply	No Bid	
W	484	INSERT VALVE & SLEEVE W/ INSTALLATION	16"	DRO-STOP INSTA-VALVE 250 PATROIT		EA	1	Hayes Pipe Supply	No Bid	

Client#: 613919 22HAYESPIP

ACORD™ CERTIFICATE OF LIABILITY INSURANCE

DATE (MM/DD/YYYY) 5/13/2026

THIS CERTIFICATE IS ISSUED AS A MATTER OF INFORMATION ONLY AND CONFERS NO RIGHTS UPON THE CERTIFICATE HOLDER. THIS CERTIFICATE DOES NOT AFFIRMATIVELY OR NEGATIVELY AMEND, EXTEND OR ALTER THE COVERAGE AFFORDED BY THE POLICIES BELOW. THIS CERTIFICATE OF INSURANCE DOES NOT CONSTITUTE A CONTRACT BETWEEN THE ISSUING INSURER(S), AUTHORIZED REPRESENTATIVE OR PRODUCER, AND THE CERTIFICATE HOLDER.

IMPORTANT: If the certificate holder is an ADDITIONAL INSURED, the policy(ies) must have ADDITIONAL INSURED provisions or be endorsed. If SUBROGATION IS WAIVED, subject to the terms and conditions of the policy, certain policies may require an endorsement. A statement on this certificate does not confer any rights to the certificate holder in lieu of such endorsement(s).

PRODUCER	CONTACT NAME: Tiffany Carr
McGriff, a MMA LLC Company 3322 West End Ave., Suite 300 Nashville, TN 37203 615 292-9000	PHONE (A/C, No, Ext): 931-646-8408 FAX (A/C, No): E-MAIL ADDRESS: tiffany.carr@mcgriff.com
	INSURER(S) AFFORDING COVERAGE — NAIC #
	INSURER A : FCCI Insurance Company — 10178
INSURED Hayes Pipe Supply Co. P. O. Box 101550 Nashville, TN 37224	INSURER B :
	INSURER C :
	INSURER D :
	INSURER E :
	INSURER F :

COVERAGES **CERTIFICATE NUMBER:** **REVISION NUMBER:**

THIS IS TO CERTIFY THAT THE POLICIES OF INSURANCE LISTED BELOW HAVE BEEN ISSUED TO THE INSURED NAMED ABOVE FOR THE POLICY PERIOD INDICATED. NOTWITHSTANDING ANY REQUIREMENT, TERM OR CONDITION OF ANY CONTRACT OR OTHER DOCUMENT WITH RESPECT TO WHICH THIS CERTIFICATE MAY BE ISSUED OR MAY PERTAIN, THE INSURANCE AFFORDED BY THE POLICIES DESCRIBED HEREIN IS SUBJECT TO ALL THE TERMS, EXCLUSIONS AND CONDITIONS OF SUCH POLICIES. LIMITS SHOWN MAY HAVE BEEN REDUCED BY PAID CLAIMS.

INSR LTR	TYPE OF INSURANCE	ADDL INSR	SUBR WVD	POLICY NUMBER	POLICY EFF (MM/DD/YYYY)	POLICY EXP (MM/DD/YYYY)	LIMITS	
A	X COMMERCIAL GENERAL LIABILITY CLAIMS-MADE X OCCUR GEN'L AGGREGATE LIMIT APPLIES PER: X POLICY PRO-JECT LOC OTHER:			CPP10008905601	01/01/2026	01/01/2027	EACH OCCURRENCE DAMAGE TO RENTED PREMISES (Ea occurrence) MED EXP (Any one person) PERSONAL & ADV INJURY GENERAL AGGREGATE PRODUCTS - COMP/OP AGG $	$1,000,000 $100,000 $5,000 $1,000,000 $2,000,000 $2,000,000 $
A	AUTOMOBILE LIABILITY X ANY AUTO OWNED AUTOS ONLY SCHEDULED AUTOS X HIRED AUTOS ONLY X NON-OWNED AUTOS ONLY			CA10008905701	01/01/2026	01/01/2027	COMBINED SINGLE LIMIT (Ea accident) BODILY INJURY (Per person) BODILY INJURY (Per accident) PROPERTY DAMAGE (Per accident) $	$1,000,000 $ $ $ $
A	X UMBRELLA LIAB X OCCUR EXCESS LIAB CLAIMS-MADE DED X RETENTION $10000			UMB10008905901	01/01/2026	01/01/2027	EACH OCCURRENCE AGGREGATE $	$5,000,000 $5,000,000 $
A	WORKERS COMPENSATION AND EMPLOYERS' LIABILITY ANY PROPRIETOR/PARTNER/EXECUTIVE OFFICER/MEMBER EXCLUDED? Y/N N (Mandatory in NH) If yes, describe under DESCRIPTION OF OPERATIONS below	N/A		WC010008905801	01/01/2026	01/01/2027	X PER STATUTE OTH-ER E.L. EACH ACCIDENT E.L. DISEASE - EA EMPLOYEE E.L. DISEASE - POLICY LIMIT	 $1,000,000 $1,000,000 $1,000,000

DESCRIPTION OF OPERATIONS / LOCATIONS / VEHICLES (ACORD 101, Additional Remarks Schedule, may be attached if more space is required)

RE: Town of Smyrna

The General Liability policy includes a blanket automatic additional insured endorsement that provides additional insured status to Town of Smyrna when there is a written contract between the named insured and the certificate holder that requires such status.

CERTIFICATE HOLDER

Town of Smyrna
Department of Safety & Risk Management
ATTN: Henry Urbina
315 S Lowry St.
Smyrna, TN 37167

CANCELLATION

SHOULD ANY OF THE ABOVE DESCRIBED POLICIES BE CANCELLED BEFORE THE EXPIRATION DATE THEREOF, NOTICE WILL BE DELIVERED IN ACCORDANCE WITH THE POLICY PROVISIONS.

AUTHORIZED REPRESENTATIVE

Todd Thompson

© 1988-2015 ACORD CORPORATION. All rights reserved.

The ACORD name and logo are registered marks of ACORD

TIFCA

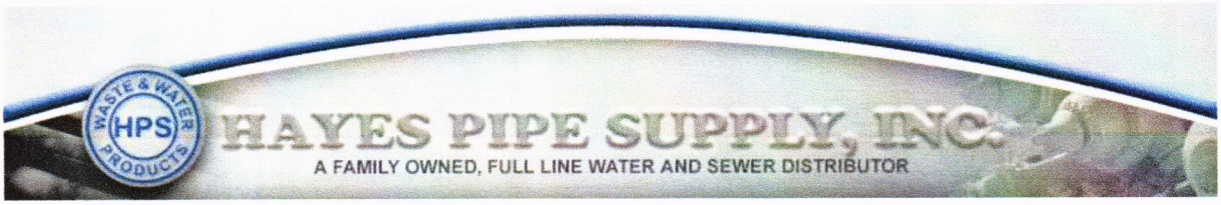

Smyrna Water Dept. Annual Sewer Bid

5-19-2026

Hayes Pipe Supply, Inc.

Southern Meter Box bid on 36H concrete boxes

Concrete meter boxes pricing valid for 90 days after bid date, and will be subject to new price at time of purchase.

Sigma was bid on the 36T cast iron sewer lids

Sigma lids pricing valid 90 days from bid date and will be subject to new price at time of purchase.

Municipex was bid as REAHU

Rheau municipex pricing valid for 120 days after bid date, and will be subject to new price at time of purchase.

Ductile Iron Pipe was bid as U.S. Pipe

U.S. Pipe prices valid thru 11/15/2026

U.S. Pipe 8" CL-350 w/401 protecto price valid for 60 days from bid date, and will be subject to new price at time of purchase.

PVC Pipe was bid mainly as Sanderson Pipe, however with the volatility of the PVC resin market, others like National Pipe, Diamond Pipe, Westlake Pipe and JM Eagle might be substituted.

All PVC pipe pricing valid for 30 days from bid date, and will be subject to new price at time of purchase.

GPK fittings were bid on sewer fittings

GPK fittings pricing valid for 90 days after bid date, and will be subject to new price at time of purchase.

Matco-Norca was quoted on brass cleanout plugs

Matco-Norca pricing valid for 60 days after bid date, and will be subject to new price at time of purchase.

Fernco Couplings bid on the rubber couplings

Fernco pricing valid for 120 days after bid date, and will be subject to new price at time of purchase.

		Smyrna							
		S = SEWER							
S	**ITEM #**	**DESCRIPTION**	**SIZE**	**APPROVED PART #**	**ALTERNATE PART #**	**UNIT**	**EST. QTY. FY 26/27**	**BIDDER**	**UNIT PRICE**
		RECLAIMED: METER BOXES and ACCESSORIES							
S	51	36H COMCRETE BOX METER BOX BODY ONLY		36H			6	**Hayes Pipe Supply**	$39.02
S	52	CI LID "SEWER" FOR 36H BOX		36T CI LID SEWER			6	**Hayes Pipe Supply**	$29.66
S	53	RECLAIMED WATER SQUARE VALVE BOX CASTING & LID		JBS 8006		EA	4	**Hayes Pipe Supply**	$302.21
S	54	SEWER SQUARE CLEANOUT CASTING & LID		JBS 8006		EA	6	**Hayes Pipe Supply**	$302.21
S	**ITEM #**	**DESCRIPTION**	**SIZE**	**APPROVED PART #**	**ALTERNATE PART #**	**UNIT**	**EST. QTY. FY 26/27**	**BIDDER**	**UNIT PRICE**
		MANHOLES							
S	58	MANHOLE CASTING/LID; JBS WATER TIGHT W/ T BAR	26"	JBS 1123		EA	2	**Hayes Pipe Supply**	No Bid
S	59	MANHOLE CASTING/LID; JBS	26"	JBS 1150		EA	2	**Hayes Pipe Supply**	No Bid
S	61	CONCRETE MANHOLE RISER	4"			EA	5	**Hayes Pipe Supply**	No Bid
S	62	CONCRETE MANHOLE RISER	6"			EA	5	**Hayes Pipe Supply**	No Bid
S	63	CONCRETE MANHOLE RISER	12"			EA	5	**Hayes Pipe Supply**	No Bid
S	64	MANHOLE RISER RING SOLID-CAST IRON	24"x1.5"			EA	5	**Hayes Pipe Supply**	No Bid
S	65	MANHOLE RISER RING SOLID-CAST IRON	26" x1.5"			EA	5	**Hayes Pipe Supply**	No Bid
S	**ITEM #**	**DESCRIPTION**	**SIZE**	**APPROVED PART #**	**ALTERNATE PART #**	**UNIT**	**EST. QTY. FY 26/27**	**BIDDER**	**UNIT PRICE**
		PIPE							
s	71	CTS ROLL REUSE PIPE (500' ROLLS) (PURPLE)	1"			FT	500	**Hayes Pipe Supply**	No bid
s	72	CTS ROLL REUSE PIPE (500' ROLLS) (PURPLE)	2"			FT	500	**Hayes Pipe Supply**	No bid
S	73	SEWER PIPE SCH 40	4"			FT	200	**Hayes Pipe Supply**	3.75'
S	74	C-900 REUSE WATER PIPE	4"		comes in 20' sections	FT	50	**Hayes Pipe Supply**	6.61'
S	75	C-900 PURPLE PIPE	6"			FT	40	**Hayes Pipe Supply**	13.14'
S	77	SDR 21 SEWER PIPE	6"			FT	100	**Hayes Pipe Supply**	7.78'
S	78	SDR 26 SEWER PIPE	6"		comes in 14' sections	FT	100	**Hayes Pipe Supply**	5.94'
S	80	CL 350 DUCTILE IRON SEWER PIPE W/ PROTECTO 401 LINING OR APPROVED EQUAL	8"		comes in 20' sections	FT	50	**Hayes Pipe Supply**	67.66'
S	81	C900 REUSE WATER PIPE	8"			FT	40	**Hayes Pipe Supply**	22.62'
S	82	SDR 21 SEWER PIPE	8"			FT	100	**Hayes Pipe Supply**	13.07'
S	83	SDR 26 SEWER PIPE	8"		comes in 14' sections	FT	100	**Hayes Pipe Supply**	10.75'
S	84	SDR 35 SEWER PIPE	8"		comes in 14' sections	FT	20	**Hayes Pipe Supply**	8.10'
S	85	SDR 35 SEWER PIPE	10"		comes in 14' sections	FT	20	**Hayes Pipe Supply**	12.62'
S	86	C900 REUSE WATER PIPE	12"			FT	20	**Hayes Pipe Supply**	48.16'
S	87	SDR 26 SEWER PIPE	12"		comes in 14' sections	FT	100	**Hayes Pipe Supply**	20.04'
S	88	SDR11 IPS HDPE PIPE (RE-USE)	6"			FT	20	**Hayes Pipe Supply**	No bid
S	89	SDR11 IPS HDPE PIPE (RE-USE)	8"			FT	20	**Hayes Pipe Supply**	No bid
S	92	SDR 26 SEWER PIPE	15"			EA	20	**Hayes Pipe Supply**	36.16'
S	93	CL 350 DUCTILE IRON SEWER PIPE W/ PROTECTO 401 LINING OR APPROVED EQUAL	20"			EA	20	**Hayes Pipe Supply**	No bid
S	**ITEM #**	**DESCRIPTION**	**SIZE**	**APPROVED PART #**	**ALTERNATE PART #**	**UNIT**	**EST. QTY. FY 26/27**	**BIDDER**	**UNIT PRICE**
		REPAIR CLAMPS							
S	96	SEWER REPAIR CLAMP;JCM	8" x 12" LONG (8.20-8.60)	101-0840-12		EA	2	**Hayes Pipe Supply**	No Bid
S	97	SEWER REPAIR CLAMP; ROMAC	12" (12.10 - 12.50)	171-125012000		EA	2	**Hayes Pipe Supply**	No Bid
S	**ITEM #**	**DESCRIPTION**	**SIZE**	**APPROVED PART #**	**ALTERNATE PART #**	**UNIT**	**EST. QTY. FY 26/27**	**BIDDER**	**UNIT PRICE**
		TAPPING SADDLES							
S	102	ROMAC SEWER TAPPING SADDLE	(8.00-14.40)	218-66640		EA	2	**Hayes Pipe Supply**	$177.16
S	**ITEM #**	**DESCRIPTION**	**SIZE**	**APPROVED PART #**	**ALTERNATE PART #**	**UNIT**	**EST. QTY. FY 26/27**	**BIDDER**	**UNIT PRICE**
		FITTINGS							
S	110	BRASS CLEAN-OUT CAP; MATCO-NORCA	4"	10082647091488		EA	15	**Hayes Pipe Supply**	$10.38
S	111	PLASTIC CLEAN-OUT CAP	4"			EA	10	**Hayes Pipe Supply**	No bid

S	112	GLUE FEMALE ADAPTOR; MULTI FITTINGS	4"		GPK# 327-0004	EA	15	Hayes Pipe Supply	$11.97
S	114	GLUE LONG SWEEP TEE WYE; CHARLOTTE	4"	6 11 942 03564 9		EA	10	Hayes Pipe Supply	No bid
S	115	GLUE 45° FEMALE COUPLING; LASCO	4"	10 02552871829 6		EA	5	Hayes Pipe Supply	No bid
S	116	GLUE COUPLING; GPK	4"		GPK# 305-0004	EA	10	Hayes Pipe Supply	$7.28
S	117	GLUE 22° FEMALE COUPLING; LASCO	4"			EA	5	Hayes Pipe Supply	No bid
S	119	QUICK CAP	6"		Indiana Seal# ISSC-6120	EA	2	Hayes Pipe Supply	$4.50
S	120	GLUE FEMALE ADAPTOR	6"			EA	15	Hayes Pipe Supply	No bid
S	122	BRASS CLEAN-OUT CAP; MATCO-NORCA	6"		Matco-Norca# CPC-600	EA	20	Hayes Pipe Supply	$25.99
S	123	PLASTIC CLEAN-OUT CAP	6"		GPK# 311-0006	EA	2	Hayes Pipe Supply	$31.39
S	124	GLUE COUPLING; GPK	6"		GPK# 305-0006	EA	6	Hayes Pipe Supply	$29.97
S	125	GLUE 45° WYE; MULTI FITTINGS	6"	22454 40306		EA	15	Hayes Pipe Supply	No bid
S	126	GLUE 22° FEMALE COUPLING; MULTI FITTINGS	6"	22434 40969		EA	5	Hayes Pipe Supply	No bid
S	127	GLUE 22° MALE/FEMALE COUPLING; GPK	6"			EA	5	Hayes Pipe Supply	No bid
S	128	GLUE 45° MALE/FEMALE COUPLING; MULTI FITTINGS	6"	22454 40406		EA	10	Hayes Pipe Supply	No bid
S	129	GLUE 45 DEGREE/FEMALE COUPLING; MULTI FITTINGS	6"	22454 40506		EA	5	Hayes Pipe Supply	No bid
S	130	SPIGOT x HUB SDR 35 x SCH 40	6" X 4"			EA	5	Hayes Pipe Supply	No bid
S	**ITEM #**	**DESCRIPTION**	**SIZE**	**APPROVED PART #**	**ALTERNATE PART #**	**UNIT**	**EST. QTY. FY 26/27**	**BIDDER**	**UNIT PRICE**
		GASKET COUPLINGS							
S	135	GASKET COUPLING; MULTI FITTINGS	6"		GPK# 906-0006	EA	2	Hayes Pipe Supply	$52.26
S	136	GASKET 22° COUPLING; HARCO	6"		GPK# 917-0006	EA	2	Hayes Pipe Supply	$59.58
S	137	GASKET 45° COUPLING; HARCO	6"		GPK# 921-0006	EA	2	Hayes Pipe Supply	$43.71
S	138	GASKET 45° MALE/FEMALE; MULTI FITTINGS	6"			EA	2	Hayes Pipe Supply	No Bid
S	139	GASKET COUPLING; GPK	8"		GPK# 906-0008	EA	2	Hayes Pipe Supply	$86.34
S	142	WYE GASKET	8" X 6"		GPK# 907-0086	EA	2	Hayes Pipe Supply	$113.67
S	144	GASKET COUPLING; GPK	10"			EA	2	Hayes Pipe Supply	No Bid
S	145	GASKET COUPLING; GPK	12"	106-0012		EA	2	Hayes Pipe Supply	No Bid
S	147	GASKET COUPLING; IPEX	15"	043637		EA	2	Hayes Pipe Supply	No Bid
S	**ITEM #**	**DESCRIPTION**	**SIZE**	**APPROVED PART #**	**ALTERNATE PART #**	**UNIT**	**EST. QTY. FY 26/27**	**BIDDER**	**UNIT PRICE**
		FERNCOS							
S	152	COUPLING; FERNCO	4" CI/PVC X 4" CI/PVC	1056-44		EA	15	Hayes Pipe Supply	$5.72
S	153	COUPLING; FERNCO	4" CONC X 4" CI/PVC	1006-44		EA	6	Hayes Pipe Supply	$6.18
S	154	COUPLING; FERNCO	4" CLAY X 4" PVC	1002-44		EA	6	Hayes Pipe Supply	$5.72
S	155	COUPLING; FERNCO	6" CLAY X 4" PVC	1001-64		EA	6	Hayes Pipe Supply	$14.38
S	156	COUPLING; FERNCO	6" CI/PVC X 4" CI/PVC	1056-64		EA	6	Hayes Pipe Supply	$14.38
S	157	COUPLING; FERNCO	6" CONC X 6" CI/PVC	1006-66		EA	6	Hayes Pipe Supply	$13.54
S	158	COUPLING; FERNCO	6" CLAY X 6" PVC	1002-66		EA	6	Hayes Pipe Supply	$12.25
S	159	COUPLING; FERNCO	6" CLAY X 6' CLAY	1001-66		EA	6	Hayes Pipe Supply	$13.23
S	160	COUPLING;FERNCO	6" CI/PVC X 6" CI/PVC	1056-66		EA	8	Hayes Pipe Supply	$12.25
S	161	COUPLING; FERNCO	6" AC or DI X 6" CI or PVC	1051-66		EA	2	Hayes Pipe Supply	$13.23
S	162	COUPLING; FERNCO	8" CI/PVC X 6" CI/PVC	1056-86		EA	2	Hayes Pipe Supply	$22.75
S	163	COUPLING; FERNCO	8" CI X 8" CI	1056-84		EA	2	Hayes Pipe Supply	$18.84
S	164	COUPLING; FERNCO	8" CONC X 8" CI/PVC	1006-68		EA	2	Hayes Pipe Supply	$20.35
S	165	COUPLING; FERNCO	8" CLAY X 8" PVC	1002-88		EA	2	Hayes Pipe Supply	$18.84
S	166	COUPLING; FERNCO	10" CI/PVC X 10" CI/PVC	1056-1010		EA	2	Hayes Pipe Supply	$28.29
S	167	COUPLING; FERNCO	10" CLAY X 10" CI/PVC	1004-88		EA	2	Hayes Pipe Supply	$28.89
S	168	COUPLING; FERNCO	10" CONC X 10" CI/PVC	1055-1010		EA	2	Hayes Pipe Supply	$28.89
S	169	COUPLING; FERNCO	12" CI/PVC X 12" CI/PVC	1056-1212		EA	2	Hayes Pipe Supply	$33.02
S	170	COUPLING; FERNCO	12" CLAY X 12" CI/PVC	1002-1212		EA	2	Hayes Pipe Supply	$33.02
S	171	COUPLING;FERNCO	12" CONC X 12" PVC	1006-1212		EA	2	Hayes Pipe Supply	$33.02
S	172	COUPLING;FERNCO	15" CLAY X 15" PVC	1002-1515		EA	2	Hayes Pipe Supply	$151.14

Client#: 613919 22HAYESPIP

ACORD™ CERTIFICATE OF LIABILITY INSURANCE

DATE (MM/DD/YYYY) 5/13/2026

THIS CERTIFICATE IS ISSUED AS A MATTER OF INFORMATION ONLY AND CONFERS NO RIGHTS UPON THE CERTIFICATE HOLDER. THIS CERTIFICATE DOES NOT AFFIRMATIVELY OR NEGATIVELY AMEND, EXTEND OR ALTER THE COVERAGE AFFORDED BY THE POLICIES BELOW. THIS CERTIFICATE OF INSURANCE DOES NOT CONSTITUTE A CONTRACT BETWEEN THE ISSUING INSURER(S), AUTHORIZED REPRESENTATIVE OR PRODUCER, AND THE CERTIFICATE HOLDER.

IMPORTANT: If the certificate holder is an ADDITIONAL INSURED, the policy(ies) must have ADDITIONAL INSURED provisions or be endorsed. If SUBROGATION IS WAIVED, subject to the terms and conditions of the policy, certain policies may require an endorsement. A statement on this certificate does not confer any rights to the certificate holder in lieu of such endorsement(s).

PRODUCER	CONTACT NAME: Tiffany Carr
McGriff, a MMA LLC Company 3322 West End Ave., Suite 300 Nashville, TN 37203 615 292-9000	PHONE (A/C, No, Ext): 931-646-8408 FAX (A/C, No): E-MAIL ADDRESS: tiffany.carr@mcgriff.com

INSURER(S) AFFORDING COVERAGE	NAIC #
INSURER A : FCCI Insurance Company	10178
INSURER B :	
INSURER C :	
INSURER D :	
INSURER E :	
INSURER F :	

INSURED
Hayes Pipe Supply Co.
P. O. Box 101550
Nashville, TN 37224

COVERAGES **CERTIFICATE NUMBER:** **REVISION NUMBER:**

THIS IS TO CERTIFY THAT THE POLICIES OF INSURANCE LISTED BELOW HAVE BEEN ISSUED TO THE INSURED NAMED ABOVE FOR THE POLICY PERIOD INDICATED. NOTWITHSTANDING ANY REQUIREMENT, TERM OR CONDITION OF ANY CONTRACT OR OTHER DOCUMENT WITH RESPECT TO WHICH THIS CERTIFICATE MAY BE ISSUED OR MAY PERTAIN, THE INSURANCE AFFORDED BY THE POLICIES DESCRIBED HEREIN IS SUBJECT TO ALL THE TERMS, EXCLUSIONS AND CONDITIONS OF SUCH POLICIES. LIMITS SHOWN MAY HAVE BEEN REDUCED BY PAID CLAIMS.

INSR LTR	TYPE OF INSURANCE	ADDL INSR	SUBR WVD	POLICY NUMBER	POLICY EFF (MM/DD/YYYY)	POLICY EXP (MM/DD/YYYY)	LIMITS	
A	X COMMERCIAL GENERAL LIABILITY CLAIMS-MADE X OCCUR GEN'L AGGREGATE LIMIT APPLIES PER: X POLICY PRO-JECT LOC OTHER:			CPP10008905601	01/01/2026	01/01/2027	EACH OCCURRENCE DAMAGE TO RENTED PREMISES (Ea occurrence) MED EXP (Any one person) PERSONAL & ADV INJURY GENERAL AGGREGATE PRODUCTS - COMP/OP AGG	$1,000,000 $100,000 $5,000 $1,000,000 $2,000,000 $2,000,000
A	AUTOMOBILE LIABILITY X ANY AUTO OWNED AUTOS ONLY SCHEDULED AUTOS X HIRED AUTOS ONLY X NON-OWNED AUTOS ONLY			CA10008905701	01/01/2026	01/01/2027	COMBINED SINGLE LIMIT (Ea accident) BODILY INJURY (Per person) BODILY INJURY (Per accident) PROPERTY DAMAGE (Per accident)	$1,000,000 $ $ $
A	X UMBRELLA LIAB X OCCUR EXCESS LIAB CLAIMS-MADE DED X RETENTION $10000			UMB10008905901	01/01/2026	01/01/2027	EACH OCCURRENCE AGGREGATE	$5,000,000 $5,000,000
A	WORKERS COMPENSATION AND EMPLOYERS' LIABILITY ANY PROPRIETOR/PARTNER/EXECUTIVE OFFICER/MEMBER EXCLUDED? Y/N N (Mandatory in NH) If yes, describe under DESCRIPTION OF OPERATIONS below	N/A		WC010008905801	01/01/2026	01/01/2027	X PER STATUTE OTH-ER E.L. EACH ACCIDENT E.L. DISEASE - EA EMPLOYEE E.L. DISEASE - POLICY LIMIT	$1,000,000 $1,000,000 $1,000,000

DESCRIPTION OF OPERATIONS / LOCATIONS / VEHICLES (ACORD 101, Additional Remarks Schedule, may be attached if more space is required)

RE: Town of Smyrna

The General Liability policy includes a blanket automatic additional insured endorsement that provides additional insured status to Town of Smyrna when there is a written contract between the named insured and the certificate holder that requires such status.

CERTIFICATE HOLDER

Town of Smyrna
Department of Safety & Risk Management
ATTN: Henry Urbina
315 S Lowry St.
Smyrna, TN 37167

CANCELLATION

SHOULD ANY OF THE ABOVE DESCRIBED POLICIES BE CANCELLED BEFORE THE EXPIRATION DATE THEREOF, NOTICE WILL BE DELIVERED IN ACCORDANCE WITH THE POLICY PROVISIONS.

AUTHORIZED REPRESENTATIVE

Todd Thompson

© 1988-2015 ACORD CORPORATION. All rights reserved.

The ACORD name and logo are registered marks of ACORD

TIFCA

LEGAL NOTICE

INVITATION TO SUBMIT QUOTATIONS

The Town of Smyrna will accept quotations on the annual Gas, Water and Sewer materials for the Utilities Department. Bidders shall submit sealed quotations in the format specified in the Invitation to Submit Quotations no later than **2:00 p.m. May 19, 2026** at which time the bids will be publicly opened and read aloud. No bid may be withdrawn after the scheduled closing time for a period of 90 days. Bidding documents may be obtained at Smyrna Town Hall during regular business hours or www.townofsmyrna.org. Quotations should be mailed or hand delivered to:

Purchasing Department
Smyrna Town Hall
Sealed Bid on Annual Gas, Water & Sewer Materials
May 19 @ 2:00 p.m.
315 South Lowry Street
Smyrna, TN 37167

The Town of Smyrna will not discriminate in the purchase of all goods and services on the basis of race, color, religion, sex, national origin, age, disability or any other lawfully protected classification.

Verbal quotations, faxed quotations or quotations received after the closing date will not be accepted. The Town of Smyrna reserves the right to reject any and all bids, to waive technicalities or informalities and to accept any bid deemed to be in the best interest of the Town.

BY: Sierra Lowry
Finance Director

TO BE RUN: May 5, 2026

Irby Utilities

COMPANY NAME



AGREEMENT

This Agreement is made and entered into as of this _____ day of _____, 20___, by and between _____, a _____ _____ (the "Bidder") and the Town of Smyrna, Tennessee, a Tennessee municipal corporation (the "Town") for the purpose of _____.

WHEREAS, the Bidder has submitted a quotation for the provision of certain products and/or services to the Town, all in accordance with the terms of the Invitation to Submit Quotations attached hereto and incorporated herein by reference as if set forth at length verbatim as Exhibit A (the "ISQ"), and which Proposal from the Bidder is attached hereto and incorporated herein by reference as if set forth at length verbatim as Exhibit B (the "Quotation"); the ISQ and the Quotation, together with any and all ancillary documents thereto, shall be collectively referred to herein as the "Bid Documents"; and

WHEREAS, the Town now desires to accept the Bidder's quotation, in accordance with the terms set forth in such Bid Documents.

NOW, THEREFORE, in consideration of the mutual covenants contained herein, and for other good and valuable consideration, the receipt and sufficiency of which is hereby acknowledged, the undersigned do hereby agree as follows:

1. Acceptance of Bid Documents. The terms of the Bid Documents, as incorporated herein by reference, are hereby accepted by the parties hereto. The Bidder hereby agrees to provide the goods and/or services contemplated by such Bid Documents in accordance with the terms set forth therein. The Town hereby accepts the Bidder's quotation to provide the goods and/or services contemplated by such Bid Documents in accordance with the terms set forth therein.

2. Entire Agreement. This Agreement, including the exhibits and any other documents referred to herein or therein, which form a part hereof, contains the entire understanding of the parties with respect to its subject matter. There are no restrictions, agreements, promises, warranties, covenants or undertakings other than those expressly set forth herein or therein. This Agreement supersedes all prior written or oral agreements and understandings between the parties with respect to its subject matter and may not be altered, modified or amended, in whole or in part, except by the express written authorization and consent of the parties hereto.

3. Severability. This agreement constitutes the product of negotiations of the parties hereto and any enforcement of hereof will be interpreted in a neutral manner and not more strongly against any party based upon the source of the draftsmanship of this Agreement. If any provision of this Agreement shall be held invalid or unenforceable by a court of competent jurisdiction, the remaining provisions hereof shall continue to be fully effective.

4. Limitation of Liability. The Town of Smyrna shall not be liable for any loss, claim, expense or damage caused by, contributed to or arising out of the acts or omission of Bidder or third parties, whether negligent or otherwise.

5. Warranties. The Bidder warrants to the Town that all materials and equipment furnished under this Contract will be new unless otherwise specified, and that all work will be of good quality, free from faults and defects, suitable for the purpose for which the materials and equipment are furnished, and in conformance with the Agreement. If it does not perform as warranted, Bidder shall use all commercially reasonable efforts to correct the product(s) so that it operates in all material respects in conformity with the written representations of Bidder. If Bidder cannot correct the product(s) within a reasonable period of time, Bidder shall refund the purchase price of the product(s). All work not conforming to these requirements, including substitutions not properly approved and authorized, may be considered defective.

6. Software Deadline, Testing and Acceptance: If applicable to the Agreement, software provided by Bidder shall be installed for the purposes of testing, as stated herein below, no later than one hundred twenty (120) days from the effective date of this Agreement unless the parties, in writing, set a different specific date. In Addition, software provided by Bidder to The Town is subject to inspection and testing to verify that the software conforms to its written specifications and to ensure it meets The Town's needs. The Town shall have seven (7) business days after the software is installed to perform testing of the software using The Town's data. The Town shall provide Bidder with written notice of acceptance or rejection of the software five (5) business days or less after the end of the testing period. If the Town does not provide timely written notice of acceptance or rejection to Bidder, the software shall be deemed to be accepted by The Town. If the software is rejected, The Town may, at its sole discretion, either (1) return the software and receive a refund of all fees paid with respect thereto, or (2) allow Bidder to repair or replace the software, without charge, in a timely manner. In the event The Town elects to allow the Bidder to repair or replace the software, The Town shall have an additional (7) business days in which to accept or reject the software as laid out hereinabove.

7. Use of The Town's Logo or Name: Bidder shall not use The Town's name or any logo in marketing or publicity materials or for marketing or publicity purposes without the prior written authorization from The Town. Bidder shall not issue, publish, or divulge any materials developed or used in the performance of this Agreement or make any statement to the media relating to this Agreement without the prior written consent of The Town.

8. Indemnification. The parties hereto agree that Bidder shall indemnify The Town for any and all claims of negligence, tortious conduct or otherwise unlawful acts committed by Bidder in the performance of their obligations under the terms of this agreement, including any and all attachments or exhibits thereto and Bidder agrees to pay any and all costs associated with the enforcement of the terms of this indemnity agreement by The Town, including but not limited to, court costs, civil judgments, assessments or any other reasonable fees associated therewith. This clause shall survive the expiration or termination of this Agreement and shall remain in full force and effect until the expiration of any applicable statute of limitation. In addition, Article II, Section 29 of the Tennessee Constitution prohibits municipalities from lending their credit to private of public entities and, therefore, prohibits an agreement by The Town to indemnify a third party or agree to a limitation of liability provision.

9. Non-Appropriation: Bidder acknowledges that The Town is a governmental entity, and the validity of this Agreement is based upon the availability of public funding under its authority. In the event The Town fails to appropriate funds or make monies available for any fiscal year covered by the term of this Agreement for services to be provided, this Agreement shall be terminated on the last day of the fiscal year for which funds were appropriated or monies made available for such purposes without liability to The Town, and such termination shall not be a breach of the Agreement, and any unused payment made to Bidder shall be returned to The Town.

10. Tax Exemption: As a tax-exempt entity, The Town shall not be responsible for sales or use taxes incurred for products or services. The Town shall supply Bidder with its Sales and Use Tax Exemption Certificate upon Bidder's request. Bidder shall bear the burden of providing its suppliers with a copy of The Town's tax exemption certificate and Bidder shall assume all liability for such taxes, if any, that should be incurred.

11. Attorney Fees. The parties hereto agree that The Town shall be in no event liable for any attorney's fees which Bidder may incur due to breach of this Agreement by either party; and further, The Town shall not acquiesce to any term in any document that indicates or infers The Town may or shall be responsible for the Attorney's fees of another party or the Bidder's attorney fees.

12. Boycott of Israel. The Bidder certifies that it is not currently engaged in, and covenants that it will not, for the duration of the Contract, engage in a Boycott of Israel, as that term is defined in Tenn. Code Ann. § 12-4-119.

13. Failure to perform. The parties agree, in the event Bidder fails to perform any obligation, other than with regards to the date of delivery, set out in this Agreement, the Town shall be reimbursed by Bidder for any and all expenses associated with having to obtain a new provider to finish out the contracted term, including, but in no way limited to, any charges/fees, which are above and beyond the amount the Town would have paid to Bidder to complete the same task; provided, however, that if the failure, by its nature, is one that can be cured, the Bidder shall have fifteen (15) business days after receipt of written notice from the Town to cure said failure to perform. The parties hereby agree, unless a specific date of delivery is provided in this Agreement or other bid documents, all deliveries shall be made to the Town no later than ninety (90) days from the date of order. The parties further agree that if Bidder, in good faith, is not able to meet this ninety (90) day deadline of delivery due to forces beyond his, her or its control, that were unforeseeable at the time of signing this contract, then this entire Agreement shall be voidable at the sole discretion of the Town. Should the Town elect to void this Agreement due to Bidder's good faith inability, due to forces beyond his, her or its control, and which were unforeseeable at the time of signing this Agreement to meet the delivery deadline, then neither party shall be deemed to have breached this Agreement, and Bidder shall return all monies, within seven (7) business days, paid by the Town for the products/items that could not be delivered in the allotted time.

14. Unilateral Modification of Agreement Not Permitted: Bidder may make unilateral changes to its Privacy Policy, provided any such changes are subject to the provisions of this Agreement but shall not materially alter the use of the service or reduce the level of protection provided to the Town at the time of the execution of this Agreement. Except as provided in the preceding sentence, notwithstanding anything in this Agreement to the contrary, any change to this Agreement made by Bidder that is not in writing and that is not properly executed by the signatures of authorized representatives of the parties hereto, including attestation by The Town's Clerk and approved as to form by the Town Attorney are subject to the terms and conditions of this Agreement.

15. Changes to Terms: Except as provided in Paragraph No. 13 above pertaining to Bidder's Privacy Policy, Bidder shall provide The Town written notice, sent in care of Town Attorney's Office, Smyrna, Tennessee, 315 South Lowry Street, Tennessee 37167, of any proposed change to this Agreement at least ninety (90) days prior to being effective to The Town. The Town shall have thirty (30) days after receiving the written notice to terminate this Agreement, and such cancellation shall not be a breach of this Agreement. Bidder will refund to The Town any payment made by The Town to Bidder equal to the difference between the number of months the payment was intended for and the number of months remaining on this Agreement that the fee was intended to cover.

16. Price Assurance: Unless specifically stated in this Agreement or other bid documents, the bid price shall be valid for the full term of this Agreement. If the Bidder, specifically states that he, she or it cannot honor the bid price for the full term of this Agreement; then this Agreement is voidable at the sole discretion of the Town, if at any time during the full term of this Agreement, Bidder requests to raise the bid

price. If the Town elects to void this Agreement, at its sole discretion, it shall not be deemed to be a breach of the contract by either party.

17. Confidentiality. The Town, as a Tennessee Municipal Corporation is subject to the Tennessee Open Records Act, set out in T.C.A. §10-7-503 et seq; therefore, this Agreement and all documents or materials, in any format, including, but not limited to paper, electronic or virtual, that are public records pursuant to law, are not confidential and are subject to disclosure. The Town will respond to all proper Open Records Requests in the time allowed by law, without any requirement to disclose such request to Bidder or provide Bidder with notice or the time to obtain a protective order. The Town does not have the burden of establishing that information is not confidential information or that its release is authorized to release the records. This section 16 serves to meet such burden and authorization of disclosure.

18. Mediation. The Town may, at its option, require the attempted resolution of any dispute arising under this Agreement by mediation prior to the filing of any lawsuit or other claim. Should any dispute arise, Bidder shall provide the Town notice of any intent to file suit by certified mail. The Town shall notify the Bidder of its intent to exercise its right to mediation within thirty (30) days of receiving such notice. If the Town does not exercise its right to mediation, Bidder may file suit. Any mediator selected under this clause shall be agreed upon by the parties and the costs of such mediation shall be divided and paid equally between the parties.

19. No Presumption Against Drafter: The parties are both business entities having substantial experience with the subject matter of this Agreement, and each has fully participated in the negotiation and drafting of this Agreement. Accordingly, this Agreement shall be construed without regard to the rule that ambiguities in a document are to be construed against the draftsman. No inferences shall be drawn from the fact that the final, duly executed Agreement differs in any respect from any previous draft hereof.

20. Governing Law. This Agreement shall be deemed to have been executed and delivered within the State of Tennessee, and the rights and obligations of the parties shall be construed and enforced in accordance with, and governed by, the laws of the State of Tennessee. The parties agree that all obligations of the parties are performable in Smyrna, Tennessee.

21. Choice of Forum and Venue. The parties' choice of forum and venue shall be exclusively in the courts of Rutherford County, Tennessee or the United States District Court, for the Middle District of Tennessee. The parties hereby waive their right to a jury trial. Any provision of the Agreement held to violate a law or regulation shall be deemed void, and all remaining provisions shall continue in force.

IN WITNESS WHEREOF, the undersigned have executed this Agreement as of the date set forth above.

TOWN OF SMYRNA, TENNESSEE

By: _____
Name: Mary Esther Reed
Title: Mayor

ATTEST:

_____
Amber Hobbs, Town Clerk

BIDDER:

By: Bradley Belveal
Title: Gas Services Mgr

ATTEST:

Brad Belveal

SECTION III - SPECIFICATIONS COMPLIANCE

Unless otherwise noted, all quotations for the annual gas, water and sewer materials shall be in complete accordance with the specifications detailed herein.

Bidders shall note in the space provided below any exceptions or deviations in any way from the specifications of any section of this ISQ. Bidders should provide complete detail of exceptions or deviations.

Proposal Exceptions

Section	Brief Description
ELECTROFUSION	BOX QTYS NOTED WHERE APPLICABLE
PRICING VALIDITY	PRICES HELD FOR 90 DAYS, AFTER WHICH
	ORDERED ITEMS WILL BE VERIFIED PRIOR TO
	PO ACCEPTANCE

By signature below, vendor acknowledges any quotation to be in full compliance with all aspects of each section of the ISQ not noted above. The undersigned hereby declares that no person or party other than the undersigned has any interest whatever in this proposal, that it is without any connection or collusion with any person or persons making or having made any proposal for the same work and without any previous understanding with such person or persons as to relative prices, obviating competition, and that it is made in good faith.

IRBY UTILITIES	904-524-5274
COMPANY	TELEPHONE NUMBER
CHARMAINE HARER	STRATEGIC ACCTS COORD
REPRESENTATIVE NAME	REPRESENTATIVE TITLE
Charmaine Harper	CHARPER@IRBY.COM
SIGNATURE	E-MAIL ADDRESS

GAS MATERIALS BID LIST 2025-2026

GAS	ITEM #	DESCRIPTION	SIZE	APPROVED PART #	ALTERNATE PART #	UNIT	EST QTY FY 26/27	BIDDER	UNIT PRICE	ESTIMATED DELIVERY TIME
		METER RISERS								
G	89	RISER, ANODELESS, 36V X 24H, ELSTER PERFECTION	3/4" X 3/4"	79207		EA	300			
G	90	RISER, ANODELESS, ELSTER PERFECTION	1" X 1"	75766		EA	30			
G	92	RISER, ANODELESS, ELSTER PERFECTION,	2" X 2"	ASR2-2F-PB		EA	30			

GAS	ITEM #	DESCRIPTION	SIZE	APPROVED PART #	ALTERNATE PART #	UNIT	EST QTY FY 26/27	BIDDER	UNIT PRICE	ESTIMATED DELIVERY TIME
		CUTTOFS								
G	96	STOPCOCK; JOMAR 241-004D	3/4"	241-004D		EA	300			
G	97	STOPCOCK, HIGH PRESSURE, MUELLER	3/4"	3/4" H-11185		EA	10			
G	98	STOPCOCK;JOMAR 240-005B STRAIGHT	1"	240-005B		EA	30			
G	99	STOPCOCK; JOMAR 241-005D	1"	241-005D		EA	40			
G	100	STOPCOCK; 175 MAOP MUELLER	1 1/4"	1 1/4"H11175		EA	10			
G	101	STOPCOCK; 175 MAOP MCDONALD	1 1/2"	560 B 1 1/2"		EA	10			
G	102	STOPCOCK; 175 MAOP MUELLER	2"	2" H11175		EA	30			

GAS	ITEM #	DESCRIPTION	SIZE	APPROVED PART #	ALTERNATE PART #	UNIT	EST QTY FY 26/27	BIDDER	UNIT PRICE	ESTIMATED DELIVERY TIME
		POLYETHYLENE PIPE								
G	107	PIPE; HIGH DENSITY 8300 4710 BLK/YELLOW STRIPE-SDR-11 (500 FT ROLLS)	3/4"	1114569-83P 00.75"		FT	20000			
G	108	PIPE; HIGH DENSITY 8300 4710 BLK/YELLOW STRIPE-SDR-11(500 FT ROLLS)	1"	1114606-83P 01.00"		FT	3000			
G	109	PIPE; HIGH DENSITY 8300 4710 BLK/YELLOW STRIPE -SDR-11(500 FT ROLLS)	1 1/4"	1056882-83P 01.25"		FT	350			
G	110	PIPE; HIGH DENSITY 8300 4710 BLK/YELLOW STRIPE-SDR-11 (500 FT ROLLS)	2"	1056925-83P 0.200		FT	15000			
G	111	PIPE; HIGH DENISTY 8300 4710 BLK/YELLOW STRIPE -SDR-11(40 FT PER SECTION)	3"	1056967-83P 03.00"		FT	200			
G	112	PIPE; HIGH DENSITY 8300 4710 BLK/YELLOW STRIPE-SDR-11(40 FT PER SECTION)	4"	1061088-83P 04.00"		FT	5000			
G	113	PIPE; HIGH DENSITY 8300 4710 BLK/YELLOW STRIPE -SDR-11(40 FT PER SECTION)	6"	1057061-83P 06.00"		FT	2000			
		DURA LINE NOT ACCEPTED								

GAS	ITEM #	DESCRIPTION	SIZE	APPROVED PART #	ALTERNATE PART #	UNIT	EST QTY FY 26/27	BIDDER	UNIT PRICE	ESTIMATED DELIVERY TIME
		POLYETHYLENE FITTINGS								
G	118	CAP; BUTT FUSE HIGH DENISTY 8100 4710	3/4"	BBF40-07		EA	100			
G	119	CAP; BUTT FUSE HIGH DENSITY 8100 4710	1"	BBF40-1		EA	15			
G	121	CAP; BUTT FUSE HIGH DENSITY8100 4710	2"	BBF40-2		EA	40			
G	122	CAP; BUTT FUSE HIGH DENSITY 8100 4710	3"	BBF40-3		EA	10			
G	123	CAP; BUTT FUSE HIGH DENSITY 8100 4710	4"	BBF40-4		EA	25			
G	124	CAP; BUTT FUSE HIGH DENSITY 8100 4710	6"	BBF40-6		EA	10			
G	125	REDUCER; BUTT FUSE HIGH DENSITY 8100 4710	1" X 1/2"	1006458		EA	5			
G	126	REDUCER; BUTT FUSE HIGH DENSITY 8100 4710	1" X 3/4"	1036888		EA	10			
G	127	REDUCER; BUTT FUSE HIGH DENSITY 8100 4710	1 1/4" X 1"	1007964		EA	10			
G	128	REDUCER; BUTT FUSE HIGH DENISTY 8100 4710	2" X 1"	1063171		EA	10			

GAS MATERIALS BID LIST 2025-2026

GAS	ITEM #	DESCRIPTION	SIZE	APPROVED PART #	ALTERNATE PART #	UNIT	EST QTY FY 26/27	BIDDER	UNIT PRICE	ESTIMATED DELIVERY TIME
G	129	REDUCER; BUTT FUSE HIGH DENSITY 8100 4710	2" X 1 1/4"	1007977		EA	10			
G	130	REDUCER; BUTT FUSE HIGH DENSITY 8100 4710	3" X 2"	1007985		EA	10			
G	131	REDUCER; BUTT FUSE HIGH DENSITY 8100 4710	6" X 4"	1006469		EA	10			
G	132	REDUCER; BUTT FUSE HIGH DENSITY 8100 4710	4" x 3"	1007992		EA	6			
G	133	REDUCER; BUTT FUSE HIGH DENSITY 8100 4710	4" X 2"	1006466		EA	25			
G	134	TEE; HIGH DENSITY 8100 4710	3/4"	1007902		EA	30			
G	135	TEE; HIGH DENSITY 8100 4710	1"	1007910		EA	20			
G	136	TEE; HIGH DENSITY 8100 4710	1 1/4"	1007917		EA	4			
G	137	TEE; HIGH DENSITY 8100 4710	2"	1006426		EA	20			
G	138	TEE; HIGH DENSITY 8100 4710	3"	1007933		EA	4			
G	139	TEE; HIGH DENSITY8100 4710	4"	1006434		EA	20			
G	140	TEE; HIGH DENSITY 8100 4710	6"	1006442		EA	6			
G	141	ELBOW; 90 D HIGH DENSITY 8100 4710	2"	1006422		EA	10			
G	142	ELBOW; 90 D HIGH DENSITY 8100 4710	3"	1007932		EA	10			
G	143	ELBOW; 90 D HIGH DENSITY 8100 4710	4"	1006432		EA	10			
G	144	ELBOW; 90 D HIGH DENSITY 8100 4710	6"	1006440		EA	10			
G	145	ELBOW; 45 D HIGH DENSITY 8100 4710	4"	1006430		EA	10			
GAS	ITEM #	DESCRIPTION	SIZE	APPROVED PART #	ALTERNATE PART #	UNIT	EST QTY FY 26/27	BIDDER	UNIT PRICE	ESTIMATED DELIVERY TIME
		BOLT ON STEEL TAPPING SADDLE								
G	149	TAPPING SADDLE; STEEL, CONTINENTAL	1 1/4"	1315-15-1013-00		EA	4			
G	150	TAPPING SADDLE; STEEL, CONTINENTAL	2" X 3/4"	1315-17-1013-00		EA	4			
G	151	TAPPING SADDLE; STEEL, CONTINENTAL	2" X 1"	1315-17-1014-00		EA	4			
G	152	TAPPING SADDLE; STEEL, CONTINENTAL	2 1/2" X 1"			EA	4			
G	153	TAPPING SADDLE; STEEL, CONTINENTAL	3" X 1""	1315-19-1014-00		EA	4			
G	154	TAPPING SADDLE; STEEL, CONTINENTAL	4" X 1"	1315-21-1014-00		EA	4			
G	155	TAPPING SADDLE; STEEL, CONTINENTAL	6" X 1"	1315-24-1014-00		EA	4			
GAS	ITEM #	DESCRIPTION	SIZE	APPROVED PART #	ALTERNATE PART #	UNIT	EST QTY FY 26/27	BIDDER	UNIT PRICE	ESTIMATED DELIVERY TIME
		LYCOFIT FITTINGS								
G	160	REDUCER; LYCOFIT	3/4" X 1/2"	LCY060Y010B-RR		EA	10			
G	161	TEE; LYCOFIT	3/4"	LCO60Y-3TR		EA	25			
G	162	TEE; LYCOFIT	1"	LC070Y-3TR		EA	20			
G	163	TEE; LYCOFIT	2"	LC200Y-3TR		EA	20			
G	164	LYCO CAP	3/4"	LC060Y ECR		EA	50			
G	165	LYCO CAP	1"	LC070Y-ECR		EA	20			
G	166	LYCO CAP	2"	LC200Y-ECR		EA	10			
G	167	COUPLING; LYCOFIT	3/4"	LC 060 Y-DER		EA	100			
G	168	COUPLING; LYCOFIT	1/2"	LC 010 B-DER		EA	10			
G	169	COUPLING; LYCOFIT	1"	LC 070Y-DER		EA	50			
G	170	COUPLING; LYCOFIT	1 1/4"	LCO80X-DESR		EA	10			
G	171	COUPLING; LYCOFIT	2"	LC200Y-DESR		EA	40			
G	172	COUPLING; LYCOFIT REPAIR	2"	LC 200Y-DER		EA	15			
GAS	ITEM #	DESCRIPTION	SIZE	APPROVED PART #	ALTERNATE PART #	UNIT	EST QTY FY 26/27	BIDDER	UNIT PRICE	ESTIMATED DELIVERY TIME

GAS MATERIALS BID LIST 2025-2026

		POLYVALVES								
G	177	POLYVALVE; KEROTEST FULL PORT, 4710	1"	99051111	PERFECTION 45011	EA	10	IRBY	$48.68	10-12 WEEKS
G	178	POLYVALVE; KEROTEST FULL PORT, 4710	1 1/4"	99051211	PERFECTION 45172	EA	5	IRBY	$38.81	10-12 WEEKS
G	179	POLYVALVE; KEROTEST FULL PORT, 4710	2"	99052011	PERFECTION 46001	EA	25	IRBY	$93.04	10-12 WEEKS
G	180	POLYVALVE; KEROTEST FULL PORT, 4710	3'	99053011	PERFECTION 47016	EA	5	IRBY	$220.65	10-12 WEEKS
G	181	POLYVALVE; KEROTEST FULL PORT, 4710	4"	99054011	PERFECTION 47010	EA	25	IRBY	$292.50	10-12 WEEKS
G	182	POLYVALVE; KEROTEST FULL PORT, 4710	6"	99056011	PERFECTION 48000	EA	5	IRBY	$674.36	10-12 WEEKS
GAS	ITEM #	DESCRIPTION	SIZE	APPROVED PART #	ALTERNATE PART #	UNIT	EST QTY FY 26/27	BIDDER	UNIT PRICE	ESTIMATED DELIVERY TIME
		TRANSITION FITTINGS								
G	187	TRANSITION FITTING; STEEL - ELSTER PERFECTION	3/4" X 1/2"	700303		EA	5			
G	188	TRANSITION FITTING; STEEL - ELSTER PERFECTION	3/4" X 3/4"	700901		EA	5			
G	189	TRANSITION FITTING; STEEL - ELSTER PERFECTION	1" X 1"	701301		EA	5			
G	190	TRANSITION FITTING; STEEL - ELSTER PERFECTION	2" X 2"	702730		EA	5			
G	191	TRANSITION FITTING; STEEL - ELSTER PERFECTION	3" X 3"	702903		EA	5			
G	192	TRANSITION FITTING; STEEL - ELSTER PERFECTION	4" X 4"	703129		EA	5			
G	193	TRANSITION FITTING; STEEL - ELSTER PERFECTION	6" X 6"	704116		EA	5			
GAS	ITEM #	DESCRIPTION	SIZE	APPROVED PART #	ALTERNATE PART #	UNIT	EST QTY FY 26/27	BIDDER	UNIT PRICE	ESTIMATED DELIVERY TIME
		DRESSER COUPLINGS								
G	207	COUPLING; ARMORED COMPRESSION, DRESSER	3/4" X 6"	0900-0001-082		EA	5	IRBY	$35.47	3-4 WEEKS
G	208	COUPLING; ARMORED COMPRESSION, DRESSER	1" X 6"	0090-0002-082		EA	5	IRBY	$37.03	3-4 WEEKS
G	209	COUPLING; ARMORED COMPRESSION, DRESSER	1 1/4" X 6"	0090-0003-082		EA	5	IRBY	$39.96	3-4 WEEKS
G	210	COUPLING; ARMORED COMPRESSION, DRESSER	1 1/2" X 6"	0090-0004-082		EA	5	IRBY	$51.45	3-4 WEEKS
G	211	COUPLING; ARMORED COMPRESSION, DRESSER	2" X 6"	0090-0005-082		EA	5	IRBY	$58.59	3-4 WEEKS
G	212	COUPLING; ARMORED COMPRESSION, DRESSER	3/4" X 12"	0090-0090-082		EA	5	IRBY	$85.64	3-4 WEEKS
G	213	COUPLING; ARMORED COMPRESSION, DRESSER	1" X 12"	0090-0091-082		EA	5	IRBY	$93.73	3-4 WEEKS
G	214	COUPLING; ARMORED COMPRESSION, DRESSER	1 1/4" X 12"	0090-0092-082		EA	5	IRBY	$99.12	3-4 WEEKS
G	215	COUPLING; ARMORED COMPRESSION, DRESSER	1 1/2" X 12"	0090-0093-082		EA	5	IRBY	$113.27	3-4 WEEKS
G	216	COUPLING; ARMORED COMPRESSION, DRESSER	2" X 12"	0090-0094-082		EA	5	IRBY	$144.01	3-4 WEEKS
G	217	COUPLING; ARMORED COMPRESSION TEE, DRESSER	3/4"	0090-0710-082		EA	5	IRBY	$62.44	3-4 WEEKS
G	218	COUPLING; ARMORED COMPRESSION TEE, DRESSER	1"	0090-0711-082		EA	5	IRBY	$134.49	3-4 WEEKS
GAS	ITEM #	DESCRIPTION	SIZE	APPROVED PART #	ALTERNATE PART #	UNIT	EST QTY FY 26/27	BIDDER	UNIT PRICE	ESTIMATED DELIVERY TIME
		WELD TAP TEES								
G	223	MUELLER WELD ON TAP	3/4"	H - 17500 3/4"		EA	5			
G	224	MUELLER WELD ON TAP	1"	H - 17500 1"		EA	5			
G	225	MUELLER WELD ON TAP	2"	H - 17500 2"		EA	5			
GAS	ITEM #	DESCRIPTION	SIZE	APPROVED PART #	ALTERNATE PART #	UNIT	EST QTY FY 26/27	BIDDER	UNIT PRICE	ESTIMATED DELIVERY TIME
		VALVE BOXES								
G	230	TALL VALVE BOX WITH LIDS; SIGMA		562-S-G		EA	50			
G	231	SHORT VALVE BOX WITH LIDS; SIGMA		461-S-G		EA	10			

GAS MATERIALS BID LIST 2025-2026

G	232	VALVE BOX EXTENSION; SIGMA	1"	VBR-1		EA	25			
G	233	VALVE BOX EXTENSION; SIGMA	1.5"	VBR 1.5		EA	25			
G	234	VALVE BOX EXTENSION; SIGMA	2"	VBR - 2		EA	30			
G	235	VALVE BOX EXTENSION; SIGMA	3"	VBR -3		EA	25			
G	236	VALVE BOX EXTENSION; SIGMA	4"	VBR - 4		EA	25			
G	237	VALVE BOX EXTENSION; SIGMA	6"	VBR - 6		EA	25			
		HIGHLIGHTED PORTION IS ALSO ON THE WATER BID (W-500-505)		*PLEASE BID ON WATER (W-500-505)* AS WELL	*PLEASE BID ON WATER (W-500-505)* AS WELL					
GAS	ITEM #	DESCRIPTION	SIZE	APPROVED PART #	ALTERNATE PART #	UNIT	EST QTY FY 26/27	BIDDER	UNIT PRICE	ESTIMATED DELIVERY TIME
		METAL INSERTS								
G	243	METAL STIFFNER INSERTS, ELSTER PERFECTION	3/4" X 6"	74201		EA	5			
G	244	METAL STIFFNER INSERTS, ELSTER PERFECTION	1" X 6"	74203		EA	5			
G	245	METAL STIFFNER INSERTS, ELSTER PERFECTION	1 1/4" x 6"	74204		EA	5			
G	246	METAL STIFFNER INSERTS, ELSTER PERFECTION	1 1/2" x 6"	74206		EA	5			
G	247	METAL STIFFNER INSERTS, ELSTER PERFECTION	2" X 6"	74205		EA	5			
G	248	METAL STIFFNER INSERTS, ELSTER PERFECTION	3" X 6"	74210		EA	5			
GAS	ITEM #	DESCRIPTION	SIZE	APPROVED PART #	ALTERNATE PART #	UNIT	EST QTY FY 26/27	BIDDER	UNIT PRICE	ESTIMATED DELIVERY TIME
		MAGNESIUM ANODES								
G	253	ANODES, MAG	5#	ANODE - 5		EA	5			
G	254	ANODES, MAG	17#	ANODE - 7		EA	5			
GAS	ITEM #	DESCRIPTION	SIZE	APPROVED PART #	ALTERNATE PART #	UNIT	EST QTY FY 26/27	BIDDER	UNIT PRICE	ESTIMATED DELIVERY TIME
		TRACER WIRE								
G	259	TRACER WIRE - 12 GAUGE COPPER (500' ROLLS)		KRIS-TECH WIRE CW0177500		FT	30000			
GAS	ITEM #	DESCRIPTION	SIZE	APPROVED PART #	ALTERNATE PART #	UNIT	EST QTY FY 26/27	BIDDER	UNIT PRICE	ESTIMATED DELIVERY TIME
		ELECTROFUSION								
G	262	COUPLING; CENTRAL 4710 HDPE	1" X 1"	5760006	360000894	EA	50 (BOX)	IRBY	$12.22	7-10 DAYS
G	263	COUPLING; CENTRAL 4710 HDPE	2" X 2"	5760012	360000921	EA	25 (BOX)	IRBY	$12.54	7-10 DAYS
G	264	COUPLING; CENTRAL 4710 HDPE	3"	5757007	360000934	EA	36 (BOX)	IRBY	$22.58	7-10 DAYS
G	265	COUPLING; CENTRAL 4710 HDPE	4"		360000936	EA	20	IRBY	$29.78	7-10 DAYS
G	266	COUPLING; CENTRAL 4710 HDPE	6"		360000939	EA	10	IRBY	$72.79	7-10 DAYS
G	267	COUPLING; CENTRAL-REDUCING 4710 HDPE	1" X 3/4"		360001073	EA	60 (BOX)	IRBY	$13.00	7-10 DAYS
G	268	COUPLING; CENTRAL-REDUCING 4710 HDPE	1" X 1/2"		360001071	EA	10	IRBY	$13.00	7-10 DAYS
G	269	COUPLING; CENTRAL-TAP TEE 4710 HDPE	2" x 3/4"		360093380	EA	210 (BOX)	IRBY	$31.67	EARLY AUG
G	270	COUPLING; CENTRAL-TAP TEE 4710 HDPE	2" X 1"		360093396	EA	100	IRBY	$31.67	3-4 WEEKS
G	271	COUPLING; CENTRAL- TAP TEE 4710 HDPE	3" x 1"		360093446	EA	20	IRBY	$34.64	7-10 DAYS
G	272	COUPLING; CENTRAL-TAP TEE 4710 HDPE	4" x 3/4"		360093390	EA	100	IRBY	$41.78	7-10 DAYS
G	273	COUPLING; CENTRAL-TAP TEE 4710 HDPE	4" X 1"		360093452	EA	100	IRBY	$41.78	7-10 DAYS
G	274	COUPLING; CENTRAL-TAP TEE 4710 HDPE	6" X 1"		360093398	EA	30 (BOX)	IRBY	$51.74	7-10 DAYS
G	275	COUPLING; CENTRAL-TAP TEE-HV 4710 HDPE	2" X 2"		360092038	EA	20	IRBY	$123.74	7-10 DAYS

GAS MATERIALS BID LIST 2025-2026

GAS	ITEM #	DESCRIPTION	SIZE	APPROVED PART #	ALTERNATE PART #	UNIT	EST QTY FY 26/27	BIDDER	UNIT PRICE	ESTIMATED DELIVERY TIME
G	277	COUPLING; CENTRAL-TAP TEE-HV 4710 HDPE	3" X 2"		360092566	EA	10	IRBY	$123.74	7-10 DAYS
G	278	COUPLING; CENTRAL-TAP TEE-HV 4710 HDPE	4" X 2"		360092433	EA	14 (BOX)	IRBY	$131.78	7-10 DAYS
G	279	COUPLING; CENTRAL-TAP TEE-HV 4710 HDPE	6" X 2"		360092569	EA	10	IRBY	$134.21	7-10 DAYS
		EXCESS FLOW VALVES								
G	299	EXCESS FLOW VALVE SDR 11 IPS 4710 DRISCO 8300 SERIES 700	3/4"	UMAC IPS SDR11 8300 BFS/700 EFV	50098GB	EA	250	IRBY	$37.38	2-3 WEEKS
G	300	EXCESS FLOW VALVE SDR 11 IPS PLEXO 4710 SERIES 1800	1"	UMAC SERIES 1800 GREEN LABEL	25061GB	EA	15	IRBY	$37.38	2-3 WEEKS
G	301	EXCESS FLOW VALVE SDR 11 IPS PLEXO 4710 SERIES 2600	1"	UMAC SERIES 2600 PINK LABEL	25126GB	EA	10	IRBY	$37.38	2-3 WEEKS

LEGAL NOTICE

INVITATION TO SUBMIT QUOTATIONS

The Town of Smyrna will accept quotations on the annual Gas, Water and Sewer materials for the Utilities Department. Bidders shall submit sealed quotations in the format specified in the Invitation to Submit Quotations no later than **2:00 p.m. May 19, 2026** at which time the bids will be publicly opened and read aloud. No bid may be withdrawn after the scheduled closing time for a period of 90 days. Bidding documents may be obtained at Smyrna Town Hall during regular business hours or www.townofsmyrna.org. Quotations should be mailed or hand delivered to:

Purchasing Department
Smyrna Town Hall
Sealed Bid on Annual Gas, Water & Sewer Materials
May 19 @ 2:00 p.m.
315 South Lowry Street
Smyrna, TN 37167

The Town of Smyrna will not discriminate in the purchase of all goods and services on the basis of race, color, religion, sex, national origin, age, disability or any other lawfully protected classification.

Verbal quotations, faxed quotations or quotations received after the closing date will not be accepted. The Town of Smyrna reserves the right to reject any and all bids, to waive technicalities or informalities and to accept any bid deemed to be in the best interest of the Town.

BY: Sierra Lowry
Finance Director

TO BE RUN: May 5, 2026

Kerotest Manufacturing
COMPANY NAME

AGREEMENT

This Agreement is made and entered into as of this 14th day of May, 20___, by and between Kerotest Manufacturing, a Corporation (the "Bidder") and the Town of Smyrna, Tennessee, a Tennessee municipal corporation (the "Town") for the purpose of Utilities materials.

WHEREAS, the Bidder has submitted a quotation for the provision of certain products and/or services to the Town, all in accordance with the terms of the Invitation to Submit Quotations attached hereto and incorporated herein by reference as if set forth at length verbatim as Exhibit A (the "ISQ"), and which Proposal from the Bidder is attached hereto and incorporated herein by reference as if set forth at length verbatim as Exhibit B (the "Quotation"); the ISQ and the Quotation, together with any and all ancillary documents thereto, shall be collectively referred to herein as the "Bid Documents"; and

WHEREAS, the Town now desires to accept the Bidder's quotation, in accordance with the terms set forth in such Bid Documents.

NOW, THEREFORE, in consideration of the mutual covenants contained herein, and for other good and valuable consideration, the receipt and sufficiency of which is hereby acknowledged, the undersigned do hereby agree as follows:

1. Acceptance of Bid Documents. The terms of the Bid Documents, as incorporated herein by reference, are hereby accepted by the parties hereto. The Bidder hereby agrees to provide the goods and/or services contemplated by such Bid Documents in accordance with the terms set forth therein. The Town hereby accepts the Bidder's quotation to provide the goods and/or services contemplated by such Bid Documents in accordance with the terms set forth therein.

2. Entire Agreement. This Agreement, including the exhibits and any other documents referred to herein or therein, which form a part hereof, contains the entire understanding of the parties with respect to its subject matter. There are no restrictions, agreements, promises, warranties, covenants or undertakings other than those expressly set forth herein or therein. This Agreement supersedes all prior written or oral agreements and understandings between the parties with respect to its subject matter and may not be altered, modified or amended, in whole or in part, except by the express written authorization and consent of the parties hereto.

3. Severability. This agreement constitutes the product of negotiations of the parties hereto and any enforcement of hereof will be interpreted in a neutral manner and not more strongly against any party based upon the source of the draftsmanship of this Agreement. If any provision of this Agreement shall be held invalid or unenforceable by a court of competent jurisdiction, the remaining provisions hereof shall continue to be fully effective.

4. Limitation of Liability. The Town of Smyrna shall not be liable for any loss, claim, expense or damage caused by, contributed to or arising out of the acts or omission of Bidder or third parties, whether negligent or otherwise.

5. Warranties. The Bidder warrants to the Town that all materials and equipment furnished under this Contract will be new unless otherwise specified, and that all work will be of good quality, free from faults and defects, suitable for the purpose for which the materials and equipment are furnished, and in conformance with the Agreement. If it does not perform as warranted, Bidder shall use all commercially reasonable efforts to correct the product(s) so that it operates in all material respects in conformity with the written representations of Bidder. If Bidder cannot correct the product(s) within a reasonable period of time, Bidder shall refund the purchase price of the product(s). All work not conforming to these requirements, including substitutions not properly approved and authorized, may be considered defective.

6. Software Deadline, Testing and Acceptance: If applicable to the Agreement, software provided by Bidder shall be installed for the purposes of testing, as stated herein below, no later than one hundred twenty (120) days from the effective date of this Agreement unless the parties, in writing, set a different specific date. In Addition, software provided by Bidder to The Town is subject to inspection and testing to verify that the software conforms to its written specifications and to ensure it meets The Town's needs. The Town shall have seven (7) business days after the software is installed to perform testing of the software using The Town's data. The Town shall provide Bidder with written notice of acceptance or rejection of the software five (5) business days or less after the end of the testing period. If the Town does not provide timely written notice of acceptance or rejection to Bidder, the software shall be deemed to be accepted by The Town. If the software is rejected, The Town may, at its sole discretion, either (1) return the software and receive a refund of all fees paid with respect thereto, or (2) allow Bidder to repair or replace the software, without charge, in a timely manner. In the event The Town elects to allow the Bidder to repair or replace the software, The Town shall have an additional (7) business days in which to accept or reject the software as laid out hereinabove.

7. Use of The Town's Logo or Name: Bidder shall not use The Town's name or any logo in marketing or publicity materials or for marketing or publicity purposes without the prior written authorization from The Town. Bidder shall not issue, publish, or divulge any materials developed or used in the performance of this Agreement or make any statement to the media relating to this Agreement without the prior written consent of The Town.

8. Indemnification. The parties hereto agree that Bidder shall indemnify The Town for any and all claims of negligence, tortious conduct or otherwise unlawful acts committed by Bidder in the performance of their obligations under the terms of this agreement, including any and all attachments or exhibits thereto and Bidder agrees to pay any and all costs associated with the enforcement of the terms of this indemnity agreement by The Town, including but not limited to, court costs, civil judgments, assessments or any other reasonable fees associated therewith. This clause shall survive the expiration or termination of this Agreement and shall remain in full force and effect until the expiration of any applicable statute of limitation. In addition, Article II, Section 29 of the Tennessee Constitution prohibits municipalities from lending their credit to private of public entities and, therefore, prohibits an agreement by The Town to indemnify a third party or agree to a limitation of liability provision.

9. Non-Appropriation: Bidder acknowledges that The Town is a governmental entity, and the validity of this Agreement is based upon the availability of public funding under its authority. In the event The Town fails to appropriate funds or make monies available for any fiscal year covered by the term of this Agreement for services to be provided, this Agreement shall be terminated on the last day of the fiscal year for which funds were appropriated or monies made available for such purposes without liability to The Town, and such termination shall not be a breach of the Agreement, and any unused payment made to Bidder shall be returned to The Town.

10. Tax Exemption: As a tax-exempt entity, The Town shall not be responsible for sales or use taxes incurred for products or services. The Town shall supply Bidder with its Sales and Use Tax Exemption Certificate upon Bidder's request. Bidder shall bear the burden of providing its suppliers with a copy of The Town's tax exemption certificate and Bidder shall assume all liability for such taxes, if any, that should be incurred.

11. Attorney Fees. The parties hereto agree that The Town shall be in no event liable for any attorney's fees which Bidder may incur due to breach of this Agreement by either party; and further, The Town shall not acquiesce to any term in any document that indicates or infers The Town may or shall be responsible for the Attorney's fees of another party or the Bidder's attorney fees.

12. Boycott of Israel. The Bidder certifies that it is not currently engaged in, and covenants that it will not, for the duration of the Contract, engage in a Boycott of Israel, as that term is defined in Tenn. Code Ann. § 12-4-119.

13. Failure to perform. The parties agree, in the event Bidder fails to perform any obligation, other than with regards to the date of delivery, set out in this Agreement, the Town shall be reimbursed by Bidder for any and all expenses associated with having to obtain a new provider to finish out the contracted term, including, but in no way limited to, any charges/fees, which are above and beyond the amount the Town would have paid to Bidder to complete the same task; provided, however, that if the failure, by its nature, is one that can be cured, the Bidder shall have fifteen (15) business days after receipt of written notice from the Town to cure said failure to perform. The parties hereby agree, unless a specific date of delivery is provided in this Agreement or other bid documents, all deliveries shall be made to the Town no later than ninety (90) days from the date of order. The parties further agree that if Bidder, in good faith, is not able to meet this ninety (90) day deadline of delivery due to forces beyond his, her or its control, that were unforeseeable at the time of signing this contract, then this entire Agreement shall be voidable at the sole discretion of the Town. Should the Town elect to void this Agreement due to Bidder's good faith inability, due to forces beyond his, her or its control, and which were unforeseeable at the time of signing this Agreement to meet the delivery deadline, then neither party shall be deemed to have breached this Agreement, and Bidder shall return all monies, within seven (7) business days, paid by the Town for the products/items that could not be delivered in the allotted time.

14. Unilateral Modification of Agreement Not Permitted: Bidder may make unilateral changes to its Privacy Policy, provided any such changes are subject to the provisions of this Agreement but shall not materially alter the use of the service or reduce the level of protection provided to the Town at the time of the execution of this Agreement. Except as provided in the preceding sentence, notwithstanding anything in this Agreement to the contrary, any change to this Agreement made by Bidder that is not in writing and that is not properly executed by the signatures of authorized representatives of the parties hereto, including attestation by The Town's Clerk and approved as to form by the Town Attorney are subject to the terms and conditions of this Agreement.

15. Changes to Terms: Except as provided in Paragraph No. 13 above pertaining to Bidder's Privacy Policy, Bidder shall provide The Town written notice, sent in care of Town Attorney's Office, Smyrna, Tennessee, 315 South Lowry Street, Tennessee 37167, of any proposed change to this Agreement at least ninety (90) days prior to being effective to The Town. The Town shall have thirty (30) days after receiving the written notice to terminate this Agreement, and such cancellation shall not be a breach of this Agreement. Bidder will refund to The Town any payment made by The Town to Bidder equal to the difference between the number of months the payment was intended for and the number of months remaining on this Agreement that the fee was intended to cover.

16. Price Assurance: Unless specifically stated in this Agreement or other bid documents, the bid price shall be valid for the full term of this Agreement. If the Bidder, specifically states that he, she or it cannot honor the bid price for the full term of this Agreement; then this Agreement is voidable at the sole discretion of the Town, if at any time during the full term of this Agreement, Bidder requests to raise the bid

price. If the Town elects to void this Agreement, at its sole discretion, it shall not be deemed to be a breach of the contract by either party.

17. Confidentiality. The Town, as a Tennessee Municipal Corporation is subject to the Tennessee Open Records Act, set out in T.C.A. §10-7-503 et seq; therefore, this Agreement and all documents or materials, in any format, including, but not limited to paper, electronic or virtual, that are public records pursuant to law, are not confidential and are subject to disclosure. The Town will respond to all proper Open Records Requests in the time allowed by law, without any requirement to disclose such request to Bidder or provide Bidder with notice or the time to obtain a protective order. The Town does not have the burden of establishing that information is not confidential information or that its release is authorized to release the records. This section 16 serves to meet such burden and authorization of disclosure.

18. Mediation. The Town may, at its option, require the attempted resolution of any dispute arising under this Agreement by mediation prior to the filing of any lawsuit or other claim. Should any dispute arise, Bidder shall provide the Town notice of any intent to file suit by certified mail. The Town shall notify the Bidder of its intent to exercise its right to mediation within thirty (30) days of receiving such notice. If the Town does not exercise its right to mediation, Bidder may file suit. Any mediator selected under this clause shall be agreed upon by the parties and the costs of such mediation shall be divided and paid equally between the parties.

19. No Presumption Against Drafter: The parties are both business entities having substantial experience with the subject matter of this Agreement, and each has fully participated in the negotiation and drafting of this Agreement. Accordingly, this Agreement shall be construed without regard to the rule that ambiguities in a document are to be construed against the draftsman. No inferences shall be drawn from the fact that the final, duly executed Agreement differs in any respect from any previous draft hereof.

20. Governing Law. This Agreement shall be deemed to have been executed and delivered within the State of Tennessee, and the rights and obligations of the parties shall be construed and enforced in accordance with, and governed by, the laws of the State of Tennessee. The parties agree that all obligations of the parties are performable in Smyrna, Tennessee.

21. Choice of Forum and Venue. The parties' choice of forum and venue shall be exclusively in the courts of Rutherford County, Tennessee or the United States District Court, for the Middle District of Tennessee. The parties hereby waive their right to a jury trial. Any provision of the Agreement held to violate a law or regulation shall be deemed void, and all remaining provisions shall continue in force.

IN WITNESS WHEREOF, the undersigned have executed this Agreement as of the date set forth above.

TOWN OF SMYRNA, TENNESSEE

By: _____
Name: Mary Esther Reed
Title: Mayor

ATTEST:

_____
Amber Hobbs, Town Clerk

BIDDER:

By: _____
Title: Inside Sales Coordinator

ATTEST:

_____

SECTION III - SPECIFICATIONS COMPLIANCE

Unless otherwise noted, all quotations for the annual gas, water and sewer materials shall be in complete accordance with the specifications detailed herein.

Bidders shall note in the space provided below any exceptions or deviations in any way from the specifications of any section of this ISQ. Bidders should provide complete detail of exceptions or deviations.

Proposal Exceptions

Section	Brief Description

By signature below, vendor acknowledges any quotation to be in full compliance with all aspects of each section of the ISQ not noted above. The undersigned hereby declares that no person or party other than the undersigned has any interest whatever in this proposal, that it is without any connection or collusion with any person or persons making or having made any proposal for the same work and without any previous understanding with such person or persons as to relative prices, obviating competition, and that it is made in good faith.

Kerotest Manufacturing
COMPANY

412-521-5942
TELEPHONE NUMBER

Timothy Powell
REPRESENTATIVE NAME

Inside Sales Coordinator
REPRESENTATIVE TITLE

SIGNATURE

tpowell@kerotest.com
E-MAIL ADDRESS

GAS	ITEM #	DESCRIPTION	SIZE	APPROVED PART #	ALTERNATE PART #	UNIT	EST QTY FY 26/27	BIDDER	UNIT PRICE	ESTIMATED DELIVERY TIME
G	142	ELBOW; 90 D HIGH DENSITY 8100 4710	3"	1007932		EA	10			
G	143	ELBOW; 90 D HIGH DENSITY 8100 4710	4"	1006432		EA	10			
G	144	ELBOW; 90 D HIGH DENSITY 8100 4710	6"	1006440		EA	10			
G	145	ELBOW; 45 D HIGH DENSITY 8100 4710	4"	1006430		EA	10			
GAS	ITEM #	DESCRIPTION	SIZE	APPROVED PART #	ALTERNATE PART #	UNIT	EST QTY FY 26/27	BIDDER	UNIT PRICE	ESTIMATED DELIVERY TIME
		BOLT ON STEEL TAPPING SADDLE								
G	149	TAPPING SADDLE; STEEL, CONTINENTAL	1 1/4"	1315-15-1013-00		EA	4			
G	150	TAPPING SADDLE; STEEL, CONTINENTAL	2" X 3/4"	1315-17-1013-00		EA	4			
G	151	TAPPING SADDLE; STEEL, CONTINENTAL	2" X 1"	1315-17-1014-00		EA	4			
G	152	TAPPING SADDLE; STEEL, CONTINENTAL	2 1/2" X 1"			EA	4			
G	153	TAPPING SADDLE; STEEL, CONTINENTAL	3" X 1""	1315-19-1014-00		EA	4			
G	154	TAPPING SADDLE; STEEL, CONTINENTAL	4" X 1"	1315-21-1014-00		EA	4			
G	155	TAPPING SADDLE; STEEL, CONTINENTAL	6" X 1"	1315-24-1014-00		EA	4			
GAS	ITEM #	DESCRIPTION	SIZE	APPROVED PART #	ALTERNATE PART #	UNIT	EST QTY FY 26/27	BIDDER	UNIT PRICE	ESTIMATED DELIVERY TIME
		LYCOFIT FITTINGS								
G	160	REDUCER; LYCOFIT	3/4" X 1/2"	LCY060Y010B-RR		EA	10			
G	161	TEE; LYCOFIT	3/4"	LCO60Y-3TR		EA	25			
G	162	TEE; LYCOFIT	1"	LC070Y-3TR		EA	20			
G	163	TEE; LYCOFIT	2"	LC200Y-3TR		EA	20			
G	164	LYCO CAP	3/4"	LC060Y ECR		EA	50			
G	165	LYCO CAP	1"	LC070Y-ECR		EA	20			
G	166	LYCO CAP	2"	LC200Y-ECR		EA	10			
G	167	COUPLING; LYCOFIT	3/4"	LC 060 Y-DER		EA	100			
G	168	COUPLING; LYCOFIT	1/2"	LC 010 B-DER		EA	10			
G	169	COUPLING; LYCOFIT	1"	LC 070Y-DER		EA	50			
G	170	COUPLING; LYCOFIT	1 1/4"	LCO80X-DESR		EA	10			
G	171	COUPLING; LYCOFIT	2"	LC200Y-DESR		EA	40			
G	172	COUPLING; LYCOFIT REPAIR	2"	LC 200Y-DER		EA	15			
GAS	ITEM #	DESCRIPTION	SIZE	APPROVED PART #	ALTERNATE PART #	UNIT	EST QTY FY 26/27	BIDDER	UNIT PRICE	ESTIMATED DELIVERY TIME
		POLYVALVES								
G	177	POLYVALVE; KEROTEST FULL PORT, 4710	1"	99051111	PERFECTION 45011	EA	10	Kerotest Manufacturing	$37.00	6 - 8 Weeks
G	178	POLYVALVE; KEROTEST FULL PORT, 4710	1 1/4"	99051211	PERFECTION 45172	EA	5	Kerotest Manufacturing	$26.00	6 - 8 Weeks
G	179	POLYVALVE; KEROTEST FULL PORT, 4710	2"	99052011	PERFECTION 46001	EA	25	Kerotest Manufacturing	$79.00	6 - 8 Weeks
G	180	POLYVALVE; KEROTEST FULL PORT, 4710	3'	99053011	PERFECTION 47016	EA	5	Kerotest Manufacturing	$171.00	6 - 8 Weeks
G	181	POLYVALVE; KEROTEST FULL PORT, 4710	4"	99054011	PERFECTION 47010	EA	25	Kerotest Manufacturing	$234.00	6 - 8 Weeks
G	182	POLYVALVE; KEROTEST FULL PORT, 4710	6"	99056011	PERFECTION 48000	EA	5	Kerotest Manufacturing	$526.00	6 - 8 Weeks
GAS	ITEM #	DESCRIPTION	SIZE	APPROVED PART #	ALTERNATE PART #	UNIT	EST QTY FY 26/27	BIDDER	UNIT PRICE	ESTIMATED DELIVERY TIME
		TRANSITION FITTINGS								
G	187	TRANSITION FITTING; STEEL - ELSTER PERFECTION	3/4" X 1/2"	700303		EA	5			
G	188	TRANSITION FITTING; STEEL - ELSTER PERFECTION	3/4" X 3/4"	700901		EA	5			
G	189	TRANSITION FITTING; STEEL - ELSTER PERFECTION	1" X 1"	701301		EA	5			
G	190	TRANSITION FITTING; STEEL - ELSTER PERFECTION	2" X 2"	702730		EA	5			
G	191	TRANSITION FITTING; STEEL - ELSTER PERFECTION	3" X 3"	702903		EA	5			
G	192	TRANSITION FITTING; STEEL - ELSTER PERFECTION	4" X 4"	703129		EA	5			
G	193	TRANSITION FITTING; STEEL - ELSTER PERFECTION	6" X 6"	704116		EA	5			
GAS	ITEM #	DESCRIPTION	SIZE	APPROVED PART #	ALTERNATE PART #	UNIT	EST QTY FY 26/27	BIDDER	UNIT PRICE	ESTIMATED DELIVERY TIME
		DRESSER COUPLINGS								
G	207	COUPLING; ARMORED COMPRESSION, DRESSER	3/4" X 6"	0900-0001-082		EA	5			
G	208	COUPLING; ARMORED COMPRESSION, DRESSER	1" X 6"	0090-0002-082		EA	5			
G	209	COUPLING; ARMORED COMPRESSION, DRESSER	1 1/4" X 6"	0090-0003-082		EA	5			
G	210	COUPLING; ARMORED COMPRESSION, DRESSER	1 1/2" X 6"	0090-0004-082		EA	5			

Kerotest Manufacturing Corp
5500 Second Ave.
Pittsburgh PA 15207
412-521-4200 Fax: 412-521-7853

SALES QUOTE

Date: 5/14/2026
Page: 1

Bill To :

Contact:
TOWN OF SMYRNA
315 S. LOWRY ST
SMYRNA TN 37167
UNITED STATES OF AMERICA

SHIP TO:

NATURAL GAS @KLO
TOWN OF SMYRNA
108 G ST.
SMYRNA TN 37167
UNITED STATES OF AMERICA

Expires On: 6/30/2027

Quote Date	RFQ #	PO #	Ship Via	FOB	Terms
5/14/2026	4143		Prepaid	ORIGIN	NET 30 DAYS

Quantity	Source / Description *Customer Number / Description*	Model #	Unit Price	Inventory Group	Tax	Total
10	99051111 - PBVLV, 1"I,B,DR11 - Notes : 6-8 Week Lead Time		37.00	53	0.00	370.00
5	99051211 - PBVLV, 1-1/4"I,B,DR11 - Notes : 6-8 Week Lead Time		26.00	53	0.00	130.00
25	99052011 - PBVLV, 2"F,B,DR11 - Notes : 6-8 Week Lead Time		79.00	53	0.00	1,975.00
5	99053011 - PBVLV, 3"F,B,DR11 - Notes : 6-8 Week Lead Time		171.00	53	0.00	855.00
25	99054011 - PBVLV, 4"F,B,DR11 - Notes : 6-8 Week Lead Time		234.00	53	0.00	5,850.00
6	99056011 - PBVLV, 6"F,B,DR11 - Notes : 6-8 Week Lead Time		526.00	53	0.00	3,156.00

Cancellation Charge: All orders may be subject to cancellation and/or restocking charge
Return Policy: Products may be non refundable due to special order
Quote lead times are subject to prior sales
Pricing is subject to tariff rates at time of order or time of shipment

All Prices Shown in US Dollar

For further information, please contact
Timothy Powell
Email: tpowell@kerotest.com
Phone: 412-521-5942

Total Price:	**12,336.00**
Freight:	**0.00**
Total Tax	**0.00**
Grand Total	**12,336.00**

LEGAL NOTICE

INVITATION TO SUBMIT QUOTATIONS

The Town of Smyrna will accept quotations on the annual Gas, Water and Sewer materials for the Utilities Department. Bidders shall submit sealed quotations in the format specified in the Invitation to Submit Quotations no later than **2:00 p.m. May 19, 2026** at which time the bids will be publicly opened and read aloud. No bid may be withdrawn after the scheduled closing time for a period of 90 days. Bidding documents may be obtained at Smyrna Town Hall during regular business hours or www.townofsmyrna.org. Quotations should be mailed or hand delivered to:

Purchasing Department
Smyrna Town Hall
Sealed Bid on Annual Gas, Water & Sewer Materials
May 19 @ 2:00 p.m.
315 South Lowry Street
Smyrna, TN 37167

The Town of Smyrna will not discriminate in the purchase of all goods and services on the basis of race, color, religion, sex, national origin, age, disability or any other lawfully protected classification.

Verbal quotations, faxed quotations or quotations received after the closing date will not be accepted. The Town of Smyrna reserves the right to reject any and all bids, to waive technicalities or informalities and to accept any bid deemed to be in the best interest of the Town.

BY: Sierra Lowry
Finance Director

TO BE RUN: May 5, 2026

MarieCo, LLC.

COMPANY NAME

TABLE OF CONTENTS

		PAGE
SECTION I -	GENERAL INFORMATION	3
SECTION II -	SPECIFICATIONS AND PRICE QUOTATION	5
	INSURANCE REQUIREMENTS	6
	AGREEMENT	10
SECTION III –	SPECIFICATION COMPLIANCE	16
	ATTACHMENT A	17

SPREADSHEETS & DRAWINGS

SECTION I – GENERAL INFORMATION

A. The Town of Smyrna desires to purchase annual gas, water and sewer materials for the Utilities Department for the fiscal year July 1, 2026 through June 30, 2027.

Location of Smyrna Town Hall: 315 South Lowry Street Smyrna, TN 37167	Delivery Locations: Gas: 108 G Street, Smyrna Water & Sewer: 106 G Street, Smyrna Call for delivery appointment.

B. Questions should be directed to Kevin Scott 615-479-4895. Email address: kevin.scott@townofsmyrna.org.

C. The Town of Smyrna reserves the right to reject any and all bids, to waive technicalities or informalities and to accept any bid deemed to be in the best interest of the Town. No bid may be withdrawn after the scheduled closing time for a period of 90 days.

D. The bidder shall abide by and comply with the true intent of the specifications and not take advantage of any unintentional error or omission, but shall fully address the full intent and meaning of each aspect of the specifications.

E. **Equals must be pre-approved by Kevin Scott prior to bid opening. All items to be ordered as needed**. Quantities are **estimated** on annual usage.

F. All materials in the bid documents have been placed into specific categories within each department. Each category shall be considered as a whole and not broken apart (See example in Attachment A).

G. Section II, III and contract Agreement shall be **completed** and **included** as an integral part of each bidder's proposal. Successful bidder will be expected to enter into a contract Agreement with the Town. Agreement shall be signed, but not dated, by the proper business representative and submitted **with** the bid proposal. An executed contract will be forwarded to winning vendor after Council approval.

H. Freight shall be paid by vendor and should be included in unit price bid.

I. The Town is a tax-exempt organization.

J. Mail is delivered after 11:00 a.m. Monday through Friday.

K. Bid quotations **must** be submitted on the Town's quotation page(s). No exceptions.

L. THIS ORDER WILL EXPIRE JUNE 30, 2027.

M. By submission of this bid, each bidder/proposer and each person signing on behalf of any bidder certifies, and in the case of a joint bid each party thereto certifies as to its own organization, under penalty of perjury, that to the best of its knowledge and belief that each bidder is not on the list created pursuant to T.C.A. § 12-12-106 Iran

Divestment Act. For reference purposes, the list is currently available online at: State of TN_Debarred_Vendors.pdf

SECTION II – SPECIFICATIONS AND PRICE QUOTATION

Base Bid Schedule

See Attached Spreadsheets

All materials have been placed into specific categories within each department. Each category shall be considered as a whole and not broken apart. An example of the format is included in Attachment A.

The Town of Smyrna has included a spreadsheet with this document. The spreadsheet has been included for bidding convenience. Each bidder is responsible for the information and mathematical accuracy. Please check and double check your bid prior to submitting.

ESTIMATED DELIVERY TIME MUST BE INCLUDED FOR ITEMS.

Compliance with laws:

The contractor must comply with all applicable federal and state law including the prevailing wage laws.

Contractor must provide adequate proof of insurance with the bid.

INSURANCE REQUIREMENTS

The Vendor shall purchase and maintain for the duration of the contract insurance against claims for injuries to persons or damages to property which may arise from or in connection with the performance of the work hereunder by the Vendor, its agents, representatives, employees or subcontractors.

A. MINIMUM SCOPE AND LIMITS OF INSURANCE

1. **Workers Compensation**
   Workers Compensation insurance shall be in compliance with the State of Tennessee and shall be statutory. Employers Liability shall be included with a minimum limit of $500,000 per accident/per disease/per employee.

2. **Commercial General Liability**
   Commercial General Liability insurance shall have a minimum limit per occurrence of $1,000,000 and a minimum general aggregate of $2,000,000. It shall include completed operations, product liability and personal injury liability insurance.

3. **Automobile Liability**
   Automobile Liability Insurance shall have a minimum combined single limit per occurrence of $1,000,000. This insurance shall include third-party bodily injury and property damage liability for owned, hired, borrowed and non-owned automobiles.

B. DEDUCTIBLES AND SELF-INSURED RETENTIONS

Any deductibles or self-insured retentions must be declared to the Town of Smyrna. The Vendor shall be responsible for all deductibles and self-insured retentions.

C. OTHER INSURANCE PROVISIONS

The policies are to contain, or be endorsed to contain, the following provisions:

1. General Liability and Automobile Liability Coverages

   a. The Town, its elected and appointed officials, agents, employees and volunteers shall be named as an additional insured as regards negligence by the vendor.

   b. The Vendor's insurance shall be primary as respects the Town, its elected and appointed officials, agents, employees and volunteers. Any insurance or

self-insurance maintained by the Town of Smyrna shall be excess and non-contributory of the Vendor's insurance.

2. Workers Compensation and Employers Liability Coverage

   The insurer shall agree to waive all rights of subrogation against the Town, its elected and appointed officials, agents, employees and volunteers for losses arising from work performed by the Vendor for the Town of Smyrna.

3. All Coverages

   a. Coverage shall not be canceled, suspended, or voided by either party (the Vendor or the insurer) or reduced in coverage or in limits except after 30 days written notice has been given to the Town of Smyrna. Ten-day written notice of cancellation is acceptable for non-payment of premium. Notifications shall comply with the standard cancellation provisions in the Vendor's policy.

   b. Neither the acceptance of the completed work nor the payment thereof shall release the Vendor from the obligations of the insurance requirements or indemnification agreement.
   c. The insurance companies issuing the policies shall have no recourse against the Town of Smyrna for payment of premiums or for assessments under any form of the policies.

   d. Replacement certificates, policies or endorsements shall be provided to the Town for any such insurance expiring prior to the completion of services.

   e. Any failure of the Vendor to comply with reporting provisions of the policy shall not affect coverage provided to the Town, its elected and appointed officials, agents, employees and volunteers.

D. ACCEPTABILITY OF INSURERS

All required insurance shall be provided by a company or companies licensed to conduct business in the State of Tennessee. Insurance shall be underwritten by insurers with an A.M. Best Company ratings no less than an A.

E. VERIFICATION OF COVERAGE

The Vendor shall furnish the Town with Certificates of Insurance reflecting proof of required coverage. The Certificates for each insurance policy are to be signed by a person authorized by that insurer to bind coverage on its behalf. **The Certificates are to be received and approved by the Town before work commences and upon any contract renewal thereafter.**

Upon failure of the Vendor to furnish, deliver and maintain such insurance as requested, this contract, at the election of the Town, may be suspended, discontinued or terminated. Failure of the Vendor to purchase and/or maintain any required insurance shall not relieve the Vendor from any liability or indemnification under the contract.

The Certificate of Insurance naming the "Town of Smyrna" as **Additional Insured** shall be addressed to the attention of:

Town of Smyrna
Department of Safety & Risk Management
ATTN: Henry Urbina
315 S Lowry St
Smyrna, TN 37167

It can also be submitted electronically to henry.urbina@townofsmyrna.org. The subject line has to indicate the name of the project.

The Town reserves the right to request complete certified copies of all required insurance policies at any time.

F. SUBCONTRACTORS

Vendor shall include all subcontractors as insureds under its policies **OR** shall be responsible for verifying and maintaining the Certificates provided by each subcontractor. Subcontractors shall be subject to all of the requirements stated herein. The Town of Smyrna reserves the right to request copies of subcontractor's Certificates at any time.

G. WORKERS' COMPENSATION INDEMNITY

In the event Vendor is not required to provide or is exempt from providing workers' compensation coverage, the parties hereby agree that Vendor, its owners, agents and employees will have no cause of action against, and will not assert a claim against the Town of Smyrna, its elected and appointed officials, agents, employees and volunteers, under any circumstances. The parties also hereby agree that the Town of Smyrna, its elected and appointed officials, agents, employees and volunteers shall in no circumstance be, or considered as, the employer or statutory employer of Vendor, its owners, agents and employees. The parties further agree that Vendor is a wholly independent vendor and is exclusively responsible for its employees, owners, and agents. Vendor hereby agrees to protect, defend, indemnify and hold the Town of Smyrna, its elected and appointed officials, agents, employees and volunteers harmless from any such assertion or claim that may arise from the performance of this contract.

HOLD HARMLESS AND INDEMNITY REQUIREMENT:

Vendor shall indemnify and hold harmless, to the maximum extent permitted by law, the Town of Smyrna and its officers, agents, employees, volunteers, from and against any and all liability, damages, losses, (whether in contract or in tort, including personal injury, accidental death or property damage, and regardless, of whether the allegations are false, fraudulent or groundless), and costs (including reasonable attorney's fees, litigation, arbitration, mediation, appeal expenses) which in whole or in part are caused by the negligence, recklessness or intentional wrongful misconduct of the Vendor and

persons employed by or utilized by the Vendor in Vendor's performance of this Agreement.

The vendor further agrees to protect, defend, and save the Town, its elected and appointed officials, agents, employees and volunteers while working in the scope of their duties as such, harmless from and against all claims, demands, and causes of action of any kind of character, including the cost of their defense, arising in favor of the vendor's employees or third parties on account of bodily or personal injuries, death or damage to property arising out of services performed or omissions of services or in any way resulting from the acts of omissions of the vendor and/or its agents, employees, subcontractors, representative of the Town under this agreement.

Pursuant to Tennessee Attorney General Opinion 93-01, the Town will not indemnify, defend or hold harmless in any fashion the Vendor from any claims arising from any failure, regardless of any language in any attachment or other document that the Vendor may provide.

APPLICABLE LAW:

Any contract resulting from this ISQ shall be governed by and construed under the laws of the State of Tennessee.

AGREEMENT

This Agreement is made and entered into as of this 15th day of May, 20 26, by and between MarieCo, LLC., a Natural Gas manufacturer representative (the "Bidder") and the Town of Smyrna, Tennessee, a Tennessee municipal corporation (the "Town") for the purpose of Annual Gas material bid due 5/19/2026.

WHEREAS, the Bidder has submitted a quotation for the provision of certain products and/or services to the Town, all in accordance with the terms of the Invitation to Submit Quotations attached hereto and incorporated herein by reference as if set forth at length verbatim as Exhibit A (the "ISQ"), and which Proposal from the Bidder is attached hereto and incorporated herein by reference as if set forth at length verbatim as Exhibit B (the "Quotation"); the ISQ and the Quotation, together with any and all ancillary documents thereto, shall be collectively referred to herein as the "Bid Documents"; and

WHEREAS, the Town now desires to accept the Bidder's quotation, in accordance with the terms set forth in such Bid Documents.

NOW, THEREFORE, in consideration of the mutual covenants contained herein, and for other good and valuable consideration, the receipt and sufficiency of which is hereby acknowledged, the undersigned do hereby agree as follows:

1. Acceptance of Bid Documents. The terms of the Bid Documents, as incorporated herein by reference, are hereby accepted by the parties hereto. The Bidder hereby agrees to provide the goods and/or services contemplated by such Bid Documents in accordance with the terms set forth therein. The Town hereby accepts the Bidder's quotation to provide the goods and/or services contemplated by such Bid Documents in accordance with the terms set forth therein.

2. Entire Agreement. This Agreement, including the exhibits and any other documents referred to herein or therein, which form a part hereof, contains the entire understanding of the parties with respect to its subject matter. There are no restrictions, agreements, promises, warranties, covenants or undertakings other than those expressly set forth herein or therein. This Agreement supersedes all prior written or oral agreements and understandings between the parties with respect to its subject matter and may not be altered, modified or amended, in whole or in part, except by the express written authorization and consent of the parties hereto.

3. Severability. This agreement constitutes the product of negotiations of the parties hereto and any enforcement of hereof will be interpreted in a neutral manner and not more strongly against any party based upon the source of the draftsmanship of this Agreement. If any provision of this Agreement shall be held invalid or unenforceable by a court of competent jurisdiction, the remaining provisions hereof shall continue to be fully effective.

4. Limitation of Liability. The Town of Smyrna shall not be liable for any loss, claim, expense or damage caused by, contributed to or arising out of the acts or omission of Bidder or third parties, whether negligent or otherwise.

5. Warranties. The Bidder warrants to the Town that all materials and equipment furnished under this Contract will be new unless otherwise specified, and that all work will be of good quality, free from faults and defects, suitable for the purpose for which the materials and equipment are furnished, and in conformance with the Agreement. If it does not perform as warranted, Bidder shall use all commercially reasonable efforts to correct the product(s) so that it operates in all material respects in conformity with the written representations of Bidder. If Bidder cannot correct the product(s) within a reasonable period of time, Bidder shall refund the purchase price of the product(s). All work not conforming to these requirements, including substitutions not properly approved and authorized, may be considered defective.

6. Software Deadline, Testing and Acceptance: If applicable to the Agreement, software provided by Bidder shall be installed for the purposes of testing, as stated herein below, no later than one hundred twenty (120) days from the effective date of this Agreement unless the parties, in writing, set a different specific date. In Addition, software provided by Bidder to The Town is subject to inspection and testing to verify that the software conforms to its written specifications and to ensure it meets The Town's needs. The Town shall have seven (7) business days after the software is installed to perform testing of the software using The Town's data. The Town shall provide Bidder with written notice of acceptance or rejection of the software five (5) business days or less after the end of the testing period. If the Town does not provide timely written notice of acceptance or rejection to Bidder, the software shall be deemed to be accepted by The Town. If the software is rejected, The Town may, at its sole discretion, either (1) return the software and receive a refund of all fees paid with respect thereto, or (2) allow Bidder to repair or replace the software, without charge, in a timely manner. In the event The Town elects to allow the Bidder to repair or replace the software, The Town shall have an additional (7) business days in which to accept or reject the software as laid out hereinabove.

7. Use of The Town's Logo or Name: Bidder shall not use The Town's name or any logo in marketing or publicity materials or for marketing or publicity purposes without the prior written authorization from The Town. Bidder shall not issue, publish, or divulge any materials developed or used in the performance of this Agreement or make any statement to the media relating to this Agreement without the prior written consent of The Town.

8. Indemnification. The parties hereto agree that Bidder shall indemnify The Town for any and all claims of negligence, tortious conduct or otherwise unlawful acts committed by Bidder in the performance of their obligations under the terms of this agreement, including any and all attachments or exhibits thereto and Bidder agrees to pay any and all costs associated with the enforcement of the terms of this indemnity agreement by The Town, including but not limited to, court costs, civil judgments, assessments or any other reasonable fees associated therewith. This clause shall survive the expiration or termination of this Agreement and shall remain in full force and effect until the expiration of any applicable statute of limitation. In addition, Article II, Section 29 of the Tennessee Constitution prohibits municipalities from lending their credit to private of public entities and, therefore, prohibits an agreement by The Town to indemnify a third party or agree to a limitation of liability provision.

9. Non-Appropriation: Bidder acknowledges that The Town is a governmental entity, and the validity of this Agreement is based upon the availability of public funding under its authority. In the event The Town fails to appropriate funds or make monies available for any fiscal year covered by the term of this Agreement for services to be provided, this Agreement shall be terminated on the last day of the fiscal year for which funds were appropriated or monies made available for such purposes without liability to The Town, and such termination shall not be a breach of the Agreement, and any unused payment made to Bidder shall be returned to The Town.

10. Tax Exemption: As a tax-exempt entity, The Town shall not be responsible for sales or use taxes incurred for products or services. The Town shall supply Bidder with its Sales and Use Tax Exemption Certificate upon Bidder's request. Bidder shall bear the burden of providing its suppliers with a copy of The Town's tax exemption certificate and Bidder shall assume all liability for such taxes, if any, that should be incurred.

11. Attorney Fees. The parties hereto agree that The Town shall be in no event liable for any attorney's fees which Bidder may incur due to breach of this Agreement by either party; and further, The Town shall not acquiesce to any term in any document that indicates or infers The Town may or shall be responsible for the Attorney's fees of another party or the Bidder's attorney fees.

12. Boycott of Israel. The Bidder certifies that it is not currently engaged in, and covenants that it will not, for the duration of the Contract, engage in a Boycott of Israel, as that term is defined in Tenn. Code Ann. § 12-4-119.

13. Failure to perform. The parties agree, in the event Bidder fails to perform any obligation, other than with regards to the date of delivery, set out in this Agreement, the Town shall be reimbursed by Bidder for any and all expenses associated with having to obtain a new provider to finish out the contracted term, including, but in no way limited to, any charges/fees, which are above and beyond the amount the Town would have paid to Bidder to complete the same task; provided, however, that if the failure, by its nature, is one that can be cured, the Bidder shall have fifteen (15) business days after receipt of written notice from the Town to cure said failure to perform. The parties hereby agree, unless a specific date of delivery is provided in this Agreement or other bid documents, all deliveries shall be made to the Town no later than ninety (90) days from the date of order. The parties further agree that if Bidder, in good faith, is not able to meet this ninety (90) day deadline of delivery due to forces beyond his, her or its control, that were unforeseeable at the time of signing this contract, then this entire Agreement shall be voidable at the sole discretion of the Town. Should the Town elect to void this Agreement due to Bidder's good faith inability, due to forces beyond his, her or its control, and which were unforeseeable at the time of signing this Agreement to meet the delivery deadline, then neither party shall be deemed to have breached this Agreement, and Bidder shall return all monies, within seven (7) business days, paid by the Town for the products/items that could not be delivered in the allotted time.

14. Unilateral Modification of Agreement Not Permitted: Bidder may make unilateral changes to its Privacy Policy, provided any such changes are subject to the provisions of this Agreement but shall not materially alter the use of the service or reduce the level of protection provided to the Town at the time of the execution of this Agreement. Except as provided in the preceding sentence, notwithstanding anything in this Agreement to the contrary, any change to this Agreement made by Bidder that is not in writing and that is not properly executed by the signatures of authorized representatives of the parties hereto, including attestation by The Town's Clerk and approved as to form by the Town Attorney are subject to the terms and conditions of this Agreement.

15. Changes to Terms: Except as provided in Paragraph No. 13 above pertaining to Bidder's Privacy Policy, Bidder shall provide The Town written notice, sent in care of Town Attorney's Office, Smyrna, Tennessee, 315 South Lowry Street, Tennessee 37167, of any proposed change to this Agreement at least ninety (90) days prior to being effective to The Town. The Town shall have thirty (30) days after receiving the written notice to terminate this Agreement, and such cancellation shall not be a breach of this Agreement. Bidder will refund to The Town any payment made by The Town to Bidder equal to the difference between the number of months the payment was intended for and the number of months remaining on this Agreement that the fee was intended to cover.

16. Price Assurance: Unless specifically stated in this Agreement or other bid documents, the bid price shall be valid for the full term of this Agreement. If the Bidder, specifically states that he, she or it cannot honor the bid price for the full term of this Agreement; then this Agreement is voidable at the sole discretion of the Town, if at any time during the full term of this Agreement, Bidder requests to raise the bid

price. If the Town elects to void this Agreement, at its sole discretion, it shall not be deemed to be a breach of the contract by either party.

17. Confidentiality. The Town, as a Tennessee Municipal Corporation is subject to the Tennessee Open Records Act, set out in T.C.A. §10-7-503 et seq; therefore, this Agreement and all documents or materials, in any format, including, but not limited to paper, electronic or virtual, that are public records pursuant to law, are not confidential and are subject to disclosure. The Town will respond to all proper Open Records Requests in the time allowed by law, without any requirement to disclose such request to Bidder or provide Bidder with notice or the time to obtain a protective order. The Town does not have the burden of establishing that information is not confidential information or that its release is authorized to release the records. This section 16 serves to meet such burden and authorization of disclosure.

18. Mediation. The Town may, at its option, require the attempted resolution of any dispute arising under this Agreement by mediation prior to the filing of any lawsuit or other claim. Should any dispute arise, Bidder shall provide the Town notice of any intent to file suit by certified mail. The Town shall notify the Bidder of its intent to exercise its right to mediation within thirty (30) days of receiving such notice. If the Town does not exercise its right to mediation, Bidder may file suit. Any mediator selected under this clause shall be agreed upon by the parties and the costs of such mediation shall be divided and paid equally between the parties.

19. No Presumption Against Drafter: The parties are both business entities having substantial experience with the subject matter of this Agreement, and each has fully participated in the negotiation and drafting of this Agreement. Accordingly, this Agreement shall be construed without regard to the rule that ambiguities in a document are to be construed against the draftsman. No inferences shall be drawn from the fact that the final, duly executed Agreement differs in any respect from any previous draft hereof.

20. Governing Law. This Agreement shall be deemed to have been executed and delivered within the State of Tennessee, and the rights and obligations of the parties shall be construed and enforced in accordance with, and governed by, the laws of the State of Tennessee. The parties agree that all obligations of the parties are performable in Smyrna, Tennessee.

21. Choice of Forum and Venue. The parties' choice of forum and venue shall be exclusively in the courts of Rutherford County, Tennessee or the United States District Court, for the Middle District of Tennessee. The parties hereby waive their right to a jury trial. Any provision of the Agreement held to violate a law or regulation shall be deemed void, and all remaining provisions shall continue in force.

IN WITNESS WHEREOF, the undersigned have executed this Agreement as of the date set forth above.

TOWN OF SMYRNA, TENNESSEE

By: _____
Name: Mary Esther Reed
Title: Mayor

ATTEST:

_____
Amber Hobbs, Town Clerk

BIDDER:

By: Hunter Thomas; MarieCo, LLC.
Title: Inside Sales

ATTEST:

Hunter Thomas
_____

SECTION III - SPECIFICATIONS COMPLIANCE

Unless otherwise noted, all quotations for the annual gas, water and sewer materials shall be in complete accordance with the specifications detailed herein.

Bidders shall note in the space provided below any exceptions or deviations in any way from the specifications of any section of this ISQ. Bidders should provide complete detail of exceptions or deviations.

Proposal Exceptions

Section	Brief Description

By signature below, vendor acknowledges any quotation to be in full compliance with all aspects of each section of the ISQ not noted above. The undersigned hereby declares that no person or party other than the undersigned has any interest whatever in this proposal, that it is without any connection or collusion with any person or persons making or having made any proposal for the same work and without any previous understanding with such person or persons as to relative prices, obviating competition, and that it is made in good faith.

MarieCo, LLC.	205-699-7282
COMPANY	TELEPHONE NUMBER
Hunter Thomas	Inside Sales
REPRESENTATIVE NAME	REPRESENTATIVE TITLE
Hunter Thomas	sales@marieco.com
SIGNATURE	E-MAIL ADDRESS

GAS MATERIALS BID LIST 2025-2026

GAS	ITEM #	DESCRIPTION	SIZE	APPROVED PART #	ALTERNATE PART #	UNIT	EST QTY FY 26/27	BIDDER	UNIT PRICE	ESTIMATED DELIVERY TIME		
		METER RISERS										
G	89	RISER, ANODELESS, 36V X 24H, ELSTER PERFECTION	3/4" X 3/4"	79207	75387	EA	300	MarleCo, LLC.	$70.00	6-8 weeks ARO	Confirm PN	
G	90	RISER, ANODELESS, ELSTER PERFECTION	1" X 1"	75766		EA	30	MarleCo, LLC.	$90.00	6-8 weeks ARO		
G	92	RISER, ANODELESS, ELSTER PERFECTION,	2" X 2"	ASR2-2F-PB	75907	EA	30	MarleCo, LLC.	$290.00	In Stock	Confirm PN	
GAS	ITEM #	DESCRIPTION	SIZE	APPROVED PART #	ALTERNATE PART #	UNIT	EST QTY FY 26/27	BIDDER	UNIT PRICE	ESTIMATED DELIVERY TIME		
		CUTTOFS										
G	96	STOPCOCK; JOMAR 241-004D	3/4"	241-004D		EA	300	MarleCo, LLC	No Bid			
G	97	STOPCOCK, HIGH PRESSURE, MUELLER	3/4"	3/4" H-11185		EA	10	MarleCo, LLC	No Bid			
G	98	STOPCOCK;JOMAR 240-005B STRAIGHT	1"	240-005B		EA	30	MarleCo, LLC	No Bid			
G	99	STOPCOCK; JOMAR 241-005D	1"	241-005D		EA	40	MarleCo, LLC	No Bid			
G	100	STOPCOCK; 175 MAOP MUELLER	1 1/4"	1 1/4"H11175		EA	10	MarleCo, LLC	No Bid			
G	101	STOPCOCK; 175 MAOP MCDONALD	1 1/2"	560 B 1 1/2"		EA	10	MarleCo, LLC	No Bid			
G	102	STOPCOCK; 175 MAOP MUELLER	2"	2" H11175		EA	30	MarleCo, LLC	No Bid			
GAS	ITEM #	DESCRIPTION	SIZE	APPROVED PART #	ALTERNATE PART #	UNIT	EST QTY FY 26/27	BIDDER	UNIT PRICE	ESTIMATED DELIVERY TIME		
		POLYETHYLENE PIPE										
G	107	PIPE; HIGH DENSITY 8300 4710 BLK/YELLOW STRIPE-SDR-11 (500 FT ROLLS)	3/4"	1114569-83P 00.75"		FT	20000	MarleCo, LLC	No Bid			
G	108	PIPE; HIGH DENSITY 8300 4710 BLK/YELLOW STRIPE-SDR-11(500 FT ROLLS)	1"	1114606-83P 01.00"		FT	3000	MarleCo, LLC	No Bid			
G	109	PIPE; HIGH DENSITY 8300 4710 BLK/YELLOW STRIPE -SDR-11(500 FT ROLLS)	1 1/4"	1056882-83P 01.25"		FT	350	MarleCo, LLC	No Bid			
G	110	PIPE; HIGH DENSITY 8300 4710 BLK/YELLOW STRIPE-SDR-11 (500 FT ROLLS)	2"	1056925-83P 0.200		FT	15000	MarleCo, LLC	No Bid			
G	111	PIPE; HIGH DENISTY 8300 4710 BLK/YELLOW STRIPE -SDR-11(40 FT PER SECTION)	3"	1056967-83P 03.00"		FT	200	MarleCo, LLC	No Bid			
G	112	PIPE; HIGH DENSITY 8300 4710 BLK/YELLOW STRIPE-SDR-11(40 FT PER SECTION)	4"	1061088-83P 04.00"		FT	5000	MarleCo, LLC	No Bid			
G	113	PIPE; HIGH DENSITY 8300 4710 BLK/YELLOW STRIPE -SDR-11(40 FT PER SECTION)	6"	1057061-83P 06.00"		FT	2000	MarleCo, LLC	No Bid			
		DURA LINE NOT ACCEPTED										
GAS	ITEM #	DESCRIPTION	SIZE	APPROVED PART #	ALTERNATE PART #	UNIT	EST QTY FY 26/27	BIDDER	UNIT PRICE	ESTIMATED DELIVERY TIME		
		POLYETHYLENE FITTINGS										
G	118	CAP; BUTT FUSE HIGH DENISTY 8100 4710	3/4"	BBF40-07		EA	100	MarleCo, LLC	No Bid			
G	119	CAP; BUTT FUSE HIGH DENSITY 8100 4710	1"	BBF40-1		EA	15	MarleCo, LLC	No Bid			
G	121	CAP; BUTT FUSE HIGH DENSITY8100 4710	2"	BBF40-2		EA	40	MarleCo, LLC	No Bid			
G	122	CAP; BUTT FUSE HIGH DENSITY 8100 4710	3"	BBF40-3		EA	10	MarleCo, LLC	No Bid			
G	123	CAP; BUTT FUSE HIGH DENSITY 8100 4710	4"	BBF40-4		EA	25	MarleCo, LLC	No Bid			
G	124	CAP; BUTT FUSE HIGH DENSITY 8100 4710	6"	BBF40-6		EA	10	MarleCo, LLC	No Bid			
G	125	REDUCER; BUTT FUSE HIGH DENSITY 8100 4710	1" X 1/2"	1006458		EA	5	MarleCo, LLC	No Bid			
G	126	REDUCER; BUTT FUSE HIGH DENSITY 8100 4710	1" X 3/4"	1036888		EA	10	MarleCo, LLC	No Bid			
G	127	REDUCER; BUTT FUSE HIGH DENSITY 8100 4710	1 1/4" X 1"	1007964		EA	10	MarleCo, LLC	No Bid			
G	128	REDUCER; BUTT FUSE HIGH DENISTY 8100 4710	2" X 1"	1063171		EA	10	MarleCo, LLC	No Bid			
G	129	REDUCER; BUTT FUSE HIGH DENSITY 8100 4710	2" X 1 1/4"	1007977		EA	10	MarleCo, LLC	No Bid			
G	130	REDUCER; BUTT FUSE HIGH DENSITY 8100 4710	3" X 2"	1007985		EA	10	MarleCo, LLC	No Bid			

GAS MATERIALS BID LIST 2025-2026

G	131	REDUCER; BUTT FUSE HIGH DENSITY 8100 4710	6" X 4"	1006469		EA	10	MarleCo, LLC	No Bid			
G	132	REDUCER; BUTT FUSE HIGH DENSITY 8100 4710	4" x 3"	1007992		EA	6	MarleCo, LLC	No Bid			
G	133	REDUCER; BUTT FUSE HIGH DENSITY 8100 4710	4" X 2"	1006466		EA	25	MarleCo, LLC	No Bid			
G	134	TEE; HIGH DENSITY 8100 4710	3/4"	1007902		EA	30	MarleCo, LLC	No Bid			
G	135	TEE; HIGH DENSITY 8100 4710	1"	1007910		EA	20	MarleCo, LLC	No Bid			
G	136	TEE; HIGH DENSITY 8100 4710	1 1/4"	1007917		EA	4	MarleCo, LLC	No Bid			
G	137	TEE; HIGH DENSITY 8100 4710	2"	1006426		EA	20	MarleCo, LLC	No Bid			
G	138	TEE; HIGH DENSITY 8100 4710	3"	1007933		EA	4	MarleCo, LLC	No Bid			
G	139	TEE; HIGH DENSITY8100 4710	4"	1006434		EA	20	MarleCo, LLC	No Bid			
G	140	TEE; HIGH DENSITY 8100 4710	6"	1006442		EA	6	MarleCo, LLC	No Bid			
G	141	ELBOW; 90 D HIGH DENSITY 8100 4710	2"	1006422		EA	10	MarleCo, LLC	No Bid			
G	142	ELBOW; 90 D HIGH DENSITY 8100 4710	3"	1007932		EA	10	MarleCo, LLC	No Bid			
G	143	ELBOW; 90 D HIGH DENSITY 8100 4710	4"	1006432		EA	10	MarleCo, LLC	No Bid			
G	144	ELBOW; 90 D HIGH DENSITY 8100 4710	6"	1006440		EA	10	MarleCo, LLC	No Bid			
G	145	ELBOW; 45 D HIGH DENSITY 8100 4710	4"	1006430		EA	10	MarleCo, LLC	No Bid			
GAS	ITEM #	DESCRIPTION	SIZE	APPROVED PART #	ALTERNATE PART #	UNIT	EST QTY FY 26/27	BIDDER	UNIT PRICE	ESTIMATED DELIVERY TIME		
		BOLT ON STEEL TAPPING SADDLE										
G	149	TAPPING SADDLE; STEEL, CONTINENTAL	1 1/4"	1315-15-1013-00		EA	4	MarleCo, LLC	No Bid			
G	150	TAPPING SADDLE; STEEL, CONTINENTAL	2" X 3/4"	1315-17-1013-00		EA	4	MarleCo, LLC	No Bid			
G	151	TAPPING SADDLE; STEEL, CONTINENTAL	2" X 1"	1315-17-1014-00		EA	4	MarleCo, LLC	No Bid			
G	152	TAPPING SADDLE; STEEL, CONTINENTAL	2 1/2" X 1"			EA	4	MarleCo, LLC	No Bid			
G	153	TAPPING SADDLE; STEEL, CONTINENTAL	3" X 1"	1315-19-1014-00		EA	4	MarleCo, LLC	No Bid			
G	154	TAPPING SADDLE; STEEL, CONTINENTAL	4" X 1"	1315-21-1014-00		EA	4	MarleCo, LLC	No Bid			
G	155	TAPPING SADDLE; STEEL, CONTINENTAL	6" X 1"	1315-24-1014-00		EA	4	MarleCo, LLC	No Bid			
GAS	ITEM #	DESCRIPTION	SIZE	APPROVED PART #	ALTERNATE PART #	UNIT	EST QTY FY 26/27	BIDDER	UNIT PRICE	ESTIMATED DELIVERY TIME		
		LYCOFIT FITTINGS										
G	160	REDUCER; LYCOFIT	3/4" X 1/2"	LCY060Y010B-RR		EA	10	MarleCo, LLC	No Bid			
G	161	TEE; LYCOFIT	3/4"	LC060Y-3TR		EA	25	MarleCo, LLC	No Bid			
G	162	TEE; LYCOFIT	1"	LC070Y-3TR		EA	20	MarleCo, LLC	No Bid			
G	163	TEE; LYCOFIT	2"	LC200Y-3TR		EA	20	MarleCo, LLC	No Bid			
G	164	LYCO CAP	3/4"	LC060Y ECR		EA	50	MarleCo, LLC	No Bid			
G	165	LYCO CAP	1"	LC070Y-ECR		EA	20	MarleCo, LLC	No Bid			
G	166	LYCO CAP	2"	LC200Y-ECR		EA	10	MarleCo, LLC	No Bid			
G	167	COUPLING; LYCOFIT	3/4"	LC 060 Y-DER		EA	100	MarleCo, LLC	No Bid			
G	168	COUPLING; LYCOFIT	1/2"	LC 010 B-DER		EA	10	MarleCo, LLC	No Bid			
G	169	COUPLING; LYCOFIT	1"	LC 070Y-DER		EA	50	MarleCo, LLC	No Bid			
G	170	COUPLING; LYCOFIT	1 1/4"	LC080X-DESR		EA	10	MarleCo, LLC	No Bid			
G	171	COUPLING; LYCOFIT	2"	LC200Y-DESR		EA	40	MarleCo, LLC	No Bid			
G	172	COUPLING; LYCOFIT REPAIR	2"	LC 200Y-DER		EA	15	MarleCo, LLC	No Bid			
GAS	ITEM #	DESCRIPTION	SIZE	APPROVED PART #	ALTERNATE PART #	UNIT	EST QTY FY 26/27	BIDDER	UNIT PRICE	ESTIMATED DELIVERY TIME		
		POLYVALVES										
G	177	POLYVALVE; KEROTEST FULL PORT, 4710	1"	99051111	PERFECTION 45011	EA	10	MarleCo, LLC	No Bid			
G	178	POLYVALVE; KEROTEST FULL PORT, 4710	1 1/4"	99051211	PERFECTION 45172	EA	5	MarleCo, LLC	No Bid			
G	179	POLYVALVE; KEROTEST FULL PORT, 4710	2"	99052011	PERFECTION 46001	EA	25	MarleCo, LLC	No Bid			

GAS MATERIALS BID LIST 2025-2026

G	180	POLYVALVE; KEROTEST FULL PORT, 4710	3'	99053011	PERFECTION 47016	EA	5	MarleCo, LLC	No Bid			
G	181	POLYVALVE; KEROTEST FULL PORT, 4710	4"	99054011	PERFECTION 47010	EA	25	MarleCo, LLC	No Bid			
G	182	POLYVALVE; KEROTEST FULL PORT, 4710	6"	99056011	PERFECTION 48000	EA	5	MarleCo, LLC	No Bid			
GAS	ITEM #	DESCRIPTION	SIZE	APPROVED PART #	ALTERNATE PART #	UNIT	EST QTY FY 26/27	BIDDER	UNIT PRICE	ESTIMATED DELIVERY TIME		
		TRANSITION FITTINGS										
G	187	TRANSITION FITTING; STEEL - ELSTER PERFECTION	3/4" X 1/2"	700303		EA	5	MarleCo, LLC	No Bid			
G	188	TRANSITION FITTING; STEEL - ELSTER PERFECTION	3/4" X 3/4"	700901		EA	5	MarleCo, LLC	No Bid			
G	189	TRANSITION FITTING; STEEL - ELSTER PERFECTION	1" X 1"	701301		EA	5	MarleCo, LLC	No Bid			
G	190	TRANSITION FITTING; STEEL - ELSTER PERFECTION	2" X 2"	702730		EA	5	MarleCo, LLC	No Bid			
G	191	TRANSITION FITTING; STEEL - ELSTER PERFECTION	3" X 3"	702903		EA	5	MarleCo, LLC	No Bid			
G	192	TRANSITION FITTING; STEEL - ELSTER PERFECTION	4" X 4"	703129		EA	5	MarleCo, LLC	No Bid			
G	193	TRANSITION FITTING; STEEL - ELSTER PERFECTION	6" X 6"	704116		EA	5	MarleCo, LLC	No Bid			
GAS	ITEM #	DESCRIPTION	SIZE	APPROVED PART #	ALTERNATE PART #	UNIT	EST QTY FY 26/27	BIDDER	UNIT PRICE	ESTIMATED DELIVERY TIME		
		DRESSER COUPLINGS										
G	207	COUPLING; ARMORED COMPRESSION, DRESSER	3/4" X 6"	0900-0001-082		EA	5	MarleCo, LLC.	$48.00	2-4 weeks ARO		
G	208	COUPLING; ARMORED COMPRESSION, DRESSER	1" X 6"	0090-0002-082		EA	5	MarleCo, LLC.	$50.00	2-4 weeks ARO		
G	209	COUPLING; ARMORED COMPRESSION, DRESSER	1 1/4" X 6"	0090-0003-082		EA	5	MarleCo, LLC.	$54.00	2-4 weeks ARO		
G	210	COUPLING; ARMORED COMPRESSION, DRESSER	1 1/2" X 6"	0090-0004-082		EA	5	MarleCo, LLC.	$69.00	2-4 weeks ARO		
G	211	COUPLING; ARMORED COMPRESSION, DRESSER	2" X 6"	0090-0005-082		EA	5	MarleCo, LLC.	$79.00	2-4 weeks ARO		
G	212	COUPLING; ARMORED COMPRESSION, DRESSER	3/4" X 12"	0090-0090-082		EA	5	MarleCo, LLC.	$115.00	2-4 weeks ARO		
G	213	COUPLING; ARMORED COMPRESSION, DRESSER	1" X 12"	0090-0091-082		EA	5	MarleCo, LLC.	$126.00	2-4 weeks ARO		
G	214	COUPLING; ARMORED COMPRESSION, DRESSER	1 1/4" X 12"	0090-0092-082		EA	5	MarleCo, LLC.	$135.00	2-4 weeks ARO		
G	215	COUPLING; ARMORED COMPRESSION, DRESSER	1 1/2" X 12"	0090-0093-082		EA	5	MarleCo, LLC.	$155.00	2-4 weeks ARO		
G	216	COUPLING; ARMORED COMPRESSION, DRESSER	2" X 12"	0090-0094-082		EA	5	MarleCo, LLC.	$195.00	20-24 weeks ARO		
G	217	COUPLING; ARMORED COMPRESSION TEE, DRESSER	3/4"	0090-0710-082		EA	5	MarleCo, LLC.	$85.00	2-4 weeks ARO		
G	218	COUPLING; ARMORED COMPRESSION TEE, DRESSER	1"	0090-0711-082		EA	5	MarleCo, LLC.	$180.00	2-4 weeks ARO		
GAS	ITEM #	DESCRIPTION	SIZE	APPROVED PART #	ALTERNATE PART #	UNIT	EST QTY FY 26/27	BIDDER	UNIT PRICE	ESTIMATED DELIVERY TIME		
		WELD TAP TEES										
G	223	MUELLER WELD ON TAP	3/4"	H - 17500 3/4"		EA	5	MarleCo, LLC	No Bid			
G	224	MUELLER WELD ON TAP	1"	H - 17500 1"		EA	5	MarleCo, LLC	No Bid			
G	225	MUELLER WELD ON TAP	2"	H - 17500 2"		EA	5	MarleCo, LLC	No Bid			
GAS	ITEM #	DESCRIPTION	SIZE	APPROVED PART #	ALTERNATE PART #	UNIT	EST QTY FY 26/27	BIDDER	UNIT PRICE	ESTIMATED DELIVERY TIME		
		VALVE BOXES										
G	230	TALL VALVE BOX WITH LIDS; SIGMA		562-S-G		EA	50	MarleCo, LLC	No Bid			
G	231	SHORT VALVE BOX WITH LIDS; SIGMA		461-S-G		EA	10	MarleCo, LLC	No Bid			
G	232	VALVE BOX EXTENSION; SIGMA	1"	VBR-1		EA	25	MarleCo, LLC	No Bid			
G	233	VALVE BOX EXTENSION; SIGMA	1.5"	VBR 1.5		EA	25	MarleCo, LLC	No Bid			
G	234	VALVE BOX EXTENSION; SIGMA	2"	VBR - 2		EA	30	MarleCo, LLC	No Bid			
G	235	VALVE BOX EXTENSION; SIGMA	3"	VBR -3		EA	25	MarleCo, LLC	No Bid			
G	236	VALVE BOX EXTENSION; SIGMA	4"	VBR - 4		EA	25	MarleCo, LLC	No Bid			
G	237	VALVE BOX EXTENSION; SIGMA	6"	VBR - 6		EA	25	MarleCo, LLC	No Bid			

GAS MATERIALS BID LIST 2025-2026

		HIGHLIGHTED PORTION IS ALSO ON THE WATER BID (W-500-505)		*PLEASE BID ON WATER (W-500-505)* AS WELL	*PLEASE BID ON WATER (W-500-505)* AS WELL							
GAS	ITEM #	DESCRIPTION	SIZE	APPROVED PART #	ALTERNATE PART #	UNIT	EST QTY FY 26/27	BIDDER	UNIT PRICE	ESTIMATED DELIVERY TIME		
		METAL INSERTS										
G	243	METAL STIFFNER INSERTS, ELSTER PERFECTION	3/4" X 6"	74201		EA	5	MarleCo, LLC	$13.00	6-8 weeks ARO		
G	244	METAL STIFFNER INSERTS, ELSTER PERFECTION	1" X 6"	74203	74852	EA	5	MarleCo, LLC	$13.00	6-8 weeks ARO	Confirm PN	
G	245	METAL STIFFNER INSERTS, ELSTER PERFECTION	1 1/4" x 6"	74204	74853	EA	5	MarleCo, LLC	$16.00	6-8 weeks ARO	Confirm PN	
G	246	METAL STIFFNER INSERTS, ELSTER PERFECTION	1 1/2" x 6"	74206		EA	5	MarleCo, LLC	$21.00	6-8 weeks ARO		
G	247	METAL STIFFNER INSERTS, ELSTER PERFECTION	2" X 6"	74205	74865	EA	5	MarleCo, LLC	$23.00	6-8 weeks ARO	Confirm PN	
G	248	METAL STIFFNER INSERTS, ELSTER PERFECTION	3" X 6"	74210		EA	5	MarleCo, LLC	No Bid			
GAS	ITEM #	DESCRIPTION	SIZE	APPROVED PART #	ALTERNATE PART #	UNIT	EST QTY FY 26/27	BIDDER	UNIT PRICE	ESTIMATED DELIVERY TIME		
		MAGNESIUM ANODES										
G	253	ANODES, MAG	5#	ANODE - 5		EA	5	MarleCo, LLC	No Bid			
G	254	ANODES, MAG	17#	ANODE - 7		EA	5	MarleCo, LLC	No Bid			
GAS	ITEM #	DESCRIPTION	SIZE	APPROVED PART #	ALTERNATE PART #	UNIT	EST QTY FY 26/27	BIDDER	UNIT PRICE	ESTIMATED DELIVERY TIME		
		TRACER WIRE										
G	259	TRACER WIRE - 12 GAUGE COPPER (500' ROLLS)		KRIS-TECH WIRE CW0177500		FT	30000	MarleCo, LLC	No Bid			
GAS	ITEM #	DESCRIPTION	SIZE	APPROVED PART #	ALTERNATE PART #	UNIT	EST QTY FY 26/27	BIDDER	UNIT PRICE	ESTIMATED DELIVERY TIME		
		ELECTROFUSION										
G	262	COUPLING; CENTRAL 4710 HDPE	1" X 1"	5760006		EA	30	MarleCo, LLC	No Bid			
G	263	COUPLING; CENTRAL 4710 HDPE	2" X 2"	5760012		EA	20	MarleCo, LLC	No Bid			
G	264	COUPLING; CENTRAL 4710 HDPE	3"	5757007		EA	10	MarleCo, LLC	No Bid			
G	265	COUPLING; CENTRAL 4710 HDPE	4"			EA	20	MarleCo, LLC	No Bid			
G	266	COUPLING; CENTRAL 4710 HDPE	6"			EA	10	MarleCo, LLC	No Bid			
G	267	COUPLING; CENTRAL-REDUCING 4710 HDPE	1" X 3/4"			EA	50	MarleCo, LLC	No Bid			
G	268	COUPLING; CENTRAL-REDUCING 4710 HDPE	1" X 1/2"			EA	10	MarleCo, LLC	No Bid			
G	269	COUPLING; CENTRAL-TAP TEE 4710 HDPE	2" x 3/4"				200	MarleCo, LLC	No Bid			
G	270	COUPLING; CENTRAL-TAP TEE 4710 HDPE	2" X 1"			EA	100	MarleCo, LLC	No Bid			
G	271	COUPLING; CENTRAL- TAP TEE 4710 HDPE	3" x 1"			EA	20	MarleCo, LLC	No Bid			
G	272	COUPLING; CENTRAL-TAP TEE 4710 HDPE	4" x 3/4"				100	MarleCo, LLC	No Bid			
G	273	COUPLING; CENTRAL-TAP TEE 4710 HDPE	4" X 1"			EA	100	MarleCo, LLC	No Bid			
G	274	COUPLING; CENTRAL-TAP TEE 4710 HDPE	6" X 1"			EA	20	MarleCo, LLC	No Bid			
G	275	COUPLING; CENTRAL-TAP TEE-HV 4710 HDPE	2" X 2"			EA	20	MarleCo, LLC	No Bid			
G	277	COUPLING; CENTRAL-TAP TEE-HV 4710 HDPE	3" X 2"			EA	10	MarleCo, LLC	No Bid			
G	278	COUPLING; CENTRAL-TAP TEE-HV 4710 HDPE	4" X 2"			EA	10	MarleCo, LLC	No Bid			
G	279	COUPLING; CENTRAL-TAP TEE-HV 4710 HDPE	6" X 2"			EA	10	MarleCo, LLC	No Bid			
GAS	ITEM #	DESCRIPTION	SIZE	APPROVED PART #	ALTERNATE PART #	UNIT	EST QTY FY 26/27	BIDDER	UNIT PRICE	ESTIMATED DELIVERY TIME		
		EXCESS FLOW VALVES										
G	299	EXCESS FLOW VALVE SDR 11 IPS 4710 DRISCO 8300 SERIES 700	3/4"	UMAC IPS SDR11 8300 BFS/700 EFV	50098GB	EA	250	MarleCo, LLC	No Bid			

GAS MATERIALS BID LIST 2025-2026

G	300	EXCESS FLOW VALVE SDR 11 IPS PLEXO 4710 SERIES 1800	1"	UMAC SERIES 1800 GREEN LABEL		EA	15	MarleCo, LLC	No Bid			
G	301	EXCESS FLOW VALVE SDR 11 IPS PLEXO 4710 SERIES 2600	1"	UMAC SERIES 2600 PINK LABEL		EA	10	MarleCo, LLC	No Bid			

GAS METER BID LIST 2025-2026

GAS	ITEM #	DESCRIPTION	SIZE	APPROVED PART #	ALTERNATE PART #	UNIT	EST QTY FY 26/27	BIDDER	UNIT PRICE	ESTIMATED DELIVERY TIME		
		PREFABRICATED GAS ROTARY METER SETS										
G	7	METER SET; 3.5M ROTARY METER SET - WITHOUT METER/EVC	3.5M/3M	SEE DRAWING	N/A	EA	6	MarleCo, LLC.	$4,309.00	8-10 Weeks ARO		
G	8	METER SET; 5.5M ROTARY METER SET - WITHOUT METER/EVC	5.5M/5M	SEEDRAWING	N/A	EA	2	MarleCo, LLC.	$4,625.00	8-10 Weeks ARO		
G	9	METER SET; 9 M ROTARY METER SET - WITHOUT METER/EVC	9M/7M	SEE DRAWING	N/A	EA	2	MarleCo, LLC.	$4,625.00	8-10 Weeks ARO		
G	10	METER SET; 14 M ROTARY METER SET - WITHOUT METER/EVC	14M/11-16M	SEE DRAWING	N/A	EA	3	MarleCo, LLC.	$5,000.00	8-10 Weeks ARO		
GAS	ITEM #	DESCRIPTION	SIZE	APPROVED PART #	ALTERNATE PART #	UNIT	EST QTY FY 26/27	BIDDER	UNIT PRICE	ESTIMATED DELIVERY TIME		
		DIAPHRAM GAS METERS										
G	15	METERS, AC 250 TC; ELSTER/AMERICAN - 5# CASE, 4 DIGIT ODM. INDEX; 20 LT	AC 250	AC 250 TC 6" C-C	SENSUS R-275 TC 6" C-C	EA	250	MarleCo, LLC.	$70.00	6-8 Weeks ARO	***REFURB METER***	
G	16	METERS, AL 425 TC; ELSTER/AMERICAN - 10# CASE, 4 DIGIT ODM INDEX; 30 LT	AL 425	AL 425 TC 8.25" C-C	SENSUS R-415 TC 8.25" C-C	EA	150	MarleCo, LLC.	$325.00	6-8 Weeks ARO	***REFURB METER***	
G	17	METERS, AC 630 TC; ELSTER/AMERICAN - 25# CASE, 4 DIGIT ODM. INDEX; 45 LT	AC 630	AC 630 TC 8.25" C-C	SENSUS SONIX 600 TC 6" C-C	EA	12	MarleCo, LLC.	$600.00	6-8 Weeks ARO	***REFURB METER***	
G	18	METERS, AL 800 TC; ELSTER/AMERICAN - 20# CASE, 5 DIGIT ODM. INDEX; 45 LT	AL 800	AL 800 TC 11" C-C	SENSUS SONIX 850 TC 6" C-C	EA	4	MarleCo, LLC.	$750.00	6-8 Weeks ARO	***REFURB METER***	
G	19	METERS, AL 1000 TC; ELSTER AMERICAN - 25# CASE, 5 DIGIT ODM. INDEX; 45 LT	AL 1000	AL 1000 TC 11" C-C	N/A	EA	2	MarleCo, LLC.	$950.00	6-8 Weeks ARO	***REFURB METER***	
GAS	ITEM #	DESCRIPTION	SIZE	APPROVED PART #	ALTERNATE PART #	UNIT	EST QTY FY 26/27	BIDDER	UNIT PRICE	ESTIMATED DELIVERY TIME		
		ROTARY GAS METERS										
G	23	3.5M RABO/ROOTS ROTARY METER,W/TCI INDEX, 5 DIGIT, CCF,THERMO-WELL W/GASKET AND BOLT INTSALL KIT,GASKET STRAINER,FULL FACE,RUBBER W/SS 40 MESH	3.5M/3M	G55/TCIRAB-BD-B1A-FAFA-GA-AAOCACACA-0000-00	B3 3M175 ROOTS	EA	6	MarleCo, LLC	$3,130.00	In Stock	Roots Meter (TC)	
G	24	5.5M RABO/ROOTS ROTARY METER,W/TCI INDEX,5 DIGIT CCF ,THERMO-WELLW/GASKET AND BOLT INSTALL KIT,GASKET STRAINER,FULL FACE,RUBBER W/SS 40 MESH	5.5M/5M	G100/TCIRAB-BD-B1A-FAFA-GA-AAOCACACA-0000-00	B3 5M175 ROOTS	EA	2	MarleCo, LLC	$3,790.00	In Stock	Roots Meter (TC)	
G	25	9 M RABO/ROOTS ROTARY METER, W/TCI INDEX,5 DIGIT CCF,THERMO-WELL W/GASKET AND BOLT INSTALL KIT,GASKET STRAINER,FULL FACE,RUBBER W/SS 40 MESH	9M/7M	G160/TCIRAB-BD-B1A-FAFA-GA-AAOCACACA-0000-00	B3 7M175 ROOTS	EA	2	MarleCo, LLC	$4,708.00	In Stock	Roots Meter (TC)	
G	26	14 M RABO/ROOTS ROTARY METER, W/TCI INDEX,5 DIGIT CCF ,THERMO-WELL W/ GASKET AND BOLT INSTALL KIT,GASKET STRAINER,FULL FACE,RUBBER W/SS 40 MESH	14M/11M	G250/TCIRAB-BD-B1A-FAFA-GA-AAOCACACA-0000-00	B3 11M175 ROOTS	EA	1	MarleCo, LLC	$5,865.00	In Stock	Roots Meter (TC)	
G	26A	16M RABO/ROOTS ROTARY METER,W/TCI INDEX, 5 DIGIT, CCF,THERMO-WELL W/GASKET AND BOLT INTSALL KIT,GASKET STRAINER,FULL FACE,RUBBER W/SS 40 MESH	16M	B3 16M175 ROOTS		EA	2	MarleCo, LLC	$7,978.00	In Stock	Roots Meter (TC)	
		*ALL ROTARY METERS SHALL COME WITH AMR MOUNTING BRACKET		22-1929								
GAS	ITEM #	DESCRIPTION	SIZE	APPROVED PART #	ALTERNATE PART #	UNIT	EST QTY FY 26/27	BIDDER	UNIT PRICE	ESTIMATED DELIVERY TIME		
		TURBINE GAS METERS										
G	27	METER, SENSUS T-18	4"	T-18		EA	1	MarleCo, LLC	No Bid			
G	28	METER, SENSUS AAT -18	4"	AAT-18		EA	1	MarleCo, LLC	No Bid			
G	29	METER, SENSUS AAT - 27	6"	AAT-27		EA	1	MarleCo, LLC	No Bid			
G	30	METER, SENSUS AAT - 57	6"	ATT-57		EA	1	MarleCo, LLC	No Bid			
G	31	METER SENSUS AAT-60	8"	ATT-60		EA	1	MarleCo, LLC	No Bid			
GAS	ITEM #	DESCRIPTION	SIZE	APPROVED PART #	ALTERNATE PART #	UNIT	EST QTY FY 26/27	BIDDER	UNIT PRICE	ESTIMATED DELIVERY TIME		
		ELECTRONIC CORRECTORS										
G	37	HONEYWELL EC-350 CONNECTOR W/10' DRIVE, 0-60PSI PRESSURE & TEMP		EC350-C08-00200000-A-B15110-A1-MW,N3-200	EAGLE MPI MVC,INDEX 0-102PSI-TEMP#MVC-0047M1	EA	3	MarleCo, LLC	No Bid			
G	38	HONEYWELL EC-350 CONNECTOR W/100' DRIVE, 0-300PSI PRESSURE & TEMP		EC350-E08-00200000-A-B15110-A1-MW,N3-200	EAGLE MPI MVC,INDEX 0-290PSI-TEMP#MVC-0048M1	EA	1	MarleCo, LLC	No Bid			

GAS METER BID LIST 2025-2026

GAS	ITEM #	DESCRIPTION	SIZE	APPROVED PART #	ALTERNATE PART #	UNIT	EST QTY FY 26/27	BIDDER	UNIT PRICE	ESTIMATED DELIVERY TIME		
G	39	HONEYWELL TC-INDEX, FOR AMCO C-BODY ROTARY METERS		TCIAMC-BD-B1A-FAFA-BA-AA0AEBA0A-0000-00		EA	1	MarleCo, LLC	No Bid			
G	40	HONEYWELL TC-INDEX, FOR ROOTS B3 & ROMET 3000 ROTARY METERS		TCIB33-BD-B2A-FAFA-BA-AA0AEBA0A-0000-00		EA	1	MarleCo, LLC	No Bid			
G	41	HONEYWELL TC-INDEX, FOR ROOTS B5 & ROMET 5000 ROTARY METERS		TCRMT-BD-B2A-FAFA-BA-AA0AEBA0A-0000-00		EA	1	MarleCo, LLC	No Bid			
G	42	HONEYWELL TC-INDEX, FOR RABO ROTARY METERS		TCRAB-BD-B1A-FAFA-SA-AA0CACACA-0000-00		EA	1	MarleCo, LLC	No Bid			
G	43	HONEYWELL TURBO CORRECTOR		TCSCMB-AAAA-AXA0-00A00-A5AA87-AAAABO-AFA0A-BACOE-000-000-00000-C2		EA	1	MarleCo, LLC	No Bid			
GAS	ITEM #	DESCRIPTION	SIZE	APPROVED PART #	ALTERNATE PART #	UNIT	EST QTY FY 26/27	BIDDER	UNIT PRICE	ESTIMATED DELIVERY TIME		
		METER BARS										
G	44	1" METER BARS 20LT AC-250 METERS	1" 20 LT	SEE DRAWING	N/A	EA	150	MarleCo, LLC	No Bid			
G	45	1.25" METER BARS 30LT AL-425 METERS	1.25" 30LT	SEE DRAWING	N/A	EA	150	MarleCo, LLC	No Bid			
G	50	METER BAR - METER BYPASS FOR AL-800 OR AL-1000 - 45 LT	45LT	SEE DRAWING	N/A	EA	4	MarleCo, LLC	No Bid			
G	51	METER BAR - METER BYPASS FOR AC-630 - 45 LT	45LT	SEE DRAWING	N/A	EA	2	MarleCo, LLC	No Bid			
G	52	METER BAR - METER BYPASS FOR AL-425 - 30 LT	30LT	SEE DRAWING	N/A	EA	2	MarleCo, LLC	No Bid			
GAS	ITEM #	DESCRIPTION	SIZE	APPROVED PART #	ALTERNATE PART #	UNIT	EST QTY FY 26/27	BIDDER	UNIT PRICE	ESTIMATED DELIVERY TIME		
		METER MANIFOLDS										
G	54	METER BAR - TWO METER MANIFOLD;		SEE DRAWING	N/A	EA	1	MarleCo, LLC	No Bid			
G	55	METER BAR - THREE METER MANIFOLD;		SEE DRAWING	N/A	EA	1	MarleCo, LLC	No Bid			
G	56	METER BAR - FOUR METER MANIFOLD;		SEE DRAWING	N/A	EA	1	MarleCo, LLC	No Bid			
G	57	METER BAR - FIVE METER MANIFOLD;		SEE DRAWING	N/A	EA	1	MarleCo, LLC	No Bid			
G	58	METER BAR - SIX METER MANIFOLD;		SEE DRAWING	N/A	EA	1	MarleCo, LLC	No Bid			
GAS	ITEM #	DESCRIPTION	SIZE	APPROVED PART #	ALTERNATE PART #	UNIT	EST QTY FY 26/27	BIDDER	UNIT PRICE	ESTIMATED DELIVERY TIME		
		RESIDENTIAL REGULATORS										
G	63	REGULATOR: SENSUS/AMERICAN	3/4" X 1"	1813C	143-60-2	EA	200	MarleCo, LLC.	$40.00	See Note	American 1813C / Sub 1"	
G	64	REGULATOR: SENSUS/AMERICAN	1" x 1"	1813C	143-60-2	EA	50	MarleCo, LLC.	$40.00	In Stock	American 1813C	
GAS	ITEM #	DESCRIPTION	SIZE	APPROVED PART #	ALTERNATE PART #	UNIT	EST QTY FY 26/27	BIDDER	UNIT PRICE	ESTIMATED DELIVERY TIME		
		COMMERCIAL REGULATORS										
G	68	REGULATOR: FISHER	2"	299H		EA	5	MarleCo, LLC	No Bid			
G	69	REGULATOR: FISHER	2"	CS 400		EA	4	MarleCo, LLC	No Bid			
G	71	REGULATOR FISHER HIGH CAP RELIEF 2.5"VENT	2"	CS830-IQ		EA	4	MarleCo, LLC	No Bid			
GAS	ITEM #	DESCRIPTION	SIZE	APPROVED PART #	ALTERNATE PART #	UNIT	EST QTY FY 26/27	BIDDER	UNIT PRICE	ESTIMATED DELIVERY TIME		
		FARM TAP REGULATORS/RELIEFS										
G	75	REGULATOR, FARM TAP: FISHER/BELGAS	3/4"	627R-101	R627C0020002010	EA	1	MarleCo, LLC	$460.00	6-8 Weeks ARO	Belgas	
G	76	REGULATOR: RELIEF: FISHER/BELGAS	1"	289H-49	P2590805000000	EA	1	MarleCo, LLC	$199.00	6-8 Weeks ARO	Belgas	
GAS	ITEM #	DESCRIPTION	SIZE	APPROVED PART #	ALTERNATE PART #	UNIT	EST QTY FY 26/27	BIDDER	UNIT PRICE	ESTIMATED DELIVERY TIME		
		ITRON MODULES										
G	81	ITRON MODULE FOR TOP MOUNT METERS		ERG-500E-007/008	ERG-500X-007	EA	20	MarleCo, LLC.	$110.00	6-8 Weeks ARO	***REFURB ERTS***	
G	82	ITRON MODULE FOR AC 250-630 ,AL 425		ERG-500E-001	ERG-500X-001	EA	250	MarleCo, LLC.	$65.00	6-8 Weeks ARO	***REFURB ERTS***	
G	83	ITRON MODULE SENSUS 275		ERG-500E-002	ERG-500X-002 Rodewell/Sensus 11 Tooth	EA	250	MarleCo, LLC.	$65.00	6-8 Weeks ARO	***REFURB ERTS***	
G	84	ITRON MODULE SENSUS 415		ERG-500E-004	ERG-500X-004 / Sensus 18 Tooth	EA	150	MarleCo, LLC.	$65.00	6-8 Weeks ARO	***REFURB ERTS***	
G	85	ITRON MODULE FOR REMOTE MOUNT METERS W/ TC		ERG-500E-501/503/505		EA	20	MarleCo, LLC.	No Bid			

MARIECO
A kgm Company
P.O. BOX 590
8370 Side Track
Leeds, AL 35094
(o) 205-699-7282

RE: Smyrna, TN Annual Gas, Water & Sewer Materials

Fiscal Year: July 1, 2026 through June 30, 2027

Bid Reference: GAS METER BID LIST 2025–2026

Dear Valued Customer,

MarieCo is pleased to confirm that we will honor the pricing listed below for the Town of Smyrna, TN, under the Annual Gas, Water & Sewer Materials bid for the fiscal year July 1, 2026 through June 30, 2027.

This confirmation applies to the Dresser Rotary gas meter items listed as item numbers 23, 24, 25, 26, and 26A. MarieCo will include part number 060726-060 RPR ASM #400 ETC CMPL ITRON ADPT DGTL B with these items, allowing ERTs to be mounted directly on the rotary meters by the Town of Smyrna, TN.

Our original bid and quote referenced the meter with the TC — Temperature Compensated Counter accessory only. This letter serves to clarify that MarieCo will honor the quoted pricing for the noted bid lines while also including the above-referenced adapter part number for direct ERT mounting.

Please note that any deviations from this information or changes to the meters are subject to a price increase. Availability is subject to ARO.

Please feel free to contact us if you have any questions or need additional information.

GAS	ITEM #	DESCRIPTION	SIZE	APPROVED PART #	ALTERNATE PART #	UNIT	EST QTY FY 26/27	BIDDER	UNIT PRICE	ESTIMATED DELIVERY TIME		
		ROTARY GAS METERS										
G	23	3.5M RABO/ROOTS ROTARY METER,W/TCI INDEX, 5 DIGIT, CCF,THERMO-WELL W/GASKET AND BOLT INTSALL KIT,GASKET STRAINER,FULL FACE,RUBBER W/SS 40 MESH	3.5M/3M	G65/TCIRAB-BD-B1A-FAFA-GA-AA0CACACA-0000-00	B3:3M175 ROOTS	EA	6	MarieCo, LLC	$3,130.00	In Stock	Roots Meter (TC)	
G	24	5.5M RABO/ROOTS ROTARY METER,W/TCI INDEX,5 DIGIT CCF ,THERMO-WELLW/GASKET AND BOLT INSTALL KIT,GASKET STRAINER,FULL FACE,RUBBER W/SS 40 MESH	5.5M/5M	G100/TCIRAB-BD-B1A-FAFA-GA-AA0CACACA-0000-00	B3:5M175 ROOTS	EA	2	MarieCo, LLC	$3,790.00	In Stock	Roots Meter (TC)	
G	25	9 M RABO/ROOTS ROTARY METER, W/TCI INDEX ,5 DIGIT CCF,THERMO-WELL W/GASKET AND BOLT INSTALL KIT,GASKET STRAINER,FULL FACE,RUBBER W/SS 40 MESH	9M/7M	G160/TCIRAB-BD-B1A-FAFA-GA-AA0CACACA-0000-00	B3:7M175 ROOTS	EA	2	MarieCo, LLC	$4,708.00	In Stock	Roots Meter (TC)	
G	26	14 M RABO/ROOTS ROTARY METER,W/TCI INDEX,5 DIGIT CCF ,THERMO-WELL W/ GASKET AND BOLT INSTALL KIT,GASKET STRAINER,FULL FACE,RUBBER W/SS 40 MESH	14M/11M	G250/TCIRAB-BD-B1A-FAFA-GA-AA0CACACA-0000-00	B3:11M175 ROOTS	EA	1	MarieCo, LLC	$5,865.00	In Stock	Roots Meter (TC)	
G	26A	16M RABO/ROOTS ROTARY METER,W/TCI INDEX, 5 DIGIT, CCF,THERMO-WELL W/GASKET AND BOLT INTSALL KIT,GASKET STRAINER,FULL FACE,RUBBER W/SS 40 MESH	16M		B3:16M175 ROOTS	EA	2	MarieCo, LLC	$7,978.00	In Stock	Roots Meter (TC)	
		* ALL ROTARY METERS SHALL COME WITH AMR MOUNTING BRACKET		22-1929								

Sincerely,

MarieCo, LLC.

205-699-7282

sales@marieco.com

LEGAL NOTICE

INVITATION TO SUBMIT QUOTATIONS

The Town of Smyrna will accept quotations on the annual Gas, Water and Sewer materials for the Utilities Department. Bidders shall submit sealed quotations in the format specified in the Invitation to Submit Quotations no later than **2:00 p.m. May 19, 2026** at which time the bids will be publicly opened and read aloud. No bid may be withdrawn after the scheduled closing time for a period of 90 days. Bidding documents may be obtained at Smyrna Town Hall during regular business hours or www.townofsmyrna.org. Quotations should be mailed or hand delivered to:

Purchasing Department
Smyrna Town Hall
Sealed Bid on Annual Gas, Water & Sewer Materials
May 19 @ 2:00 p.m.
315 South Lowry Street
Smyrna, TN 37167

The Town of Smyrna will not discriminate in the purchase of all goods and services on the basis of race, color, religion, sex, national origin, age, disability or any other lawfully protected classification.

Verbal quotations, faxed quotations or quotations received after the closing date will not be accepted. The Town of Smyrna reserves the right to reject any and all bids, to waive technicalities or informalities and to accept any bid deemed to be in the best interest of the Town.

BY: Sierra Lowry
Finance Director

TO BE RUN: May 5, 2026

Richards Mfg Co Sales LLC
COMPANY NAME

TABLE OF CONTENTS

		PAGE
SECTION I -	GENERAL INFORMATION	3
SECTION II -	SPECIFICATIONS AND PRICE QUOTATION	5
	INSURANCE REQUIREMENTS	6
	AGREEMENT	10
SECTION III –	SPECIFICATION COMPLIANCE	16
	ATTACHMENT A	17

SPREADSHEETS & DRAWINGS

SECTION I – GENERAL INFORMATION

A. The Town of Smyrna desires to purchase annual gas, water and sewer materials for the Utilities Department for the fiscal year July 1, 2026 through June 30, 2027.

Location of Smyrna Town Hall:
315 South Lowry Street
Smyrna, TN 37167

Delivery Locations:
Gas: 108 G Street, Smyrna
Water & Sewer: 106 G Street, Smyrna
Call for delivery appointment.

B. Questions should be directed to Kevin Scott 615-479-4895. Email address: kevin.scott@townofsmyrna.org.

C. The Town of Smyrna reserves the right to reject any and all bids, to waive technicalities or informalities and to accept any bid deemed to be in the best interest of the Town. No bid may be withdrawn after the scheduled closing time for a period of 90 days.

D. The bidder shall abide by and comply with the true intent of the specifications and not take advantage of any unintentional error or omission, but shall fully address the full intent and meaning of each aspect of the specifications.

E. **Equals must be pre-approved by Kevin Scott prior to bid opening. All items to be ordered as needed**. Quantities are **estimated** on annual usage.

F. All materials in the bid documents have been placed into specific categories within each department. Each category shall be considered as a whole and not broken apart (See example in Attachment A).

G. Section II, III and contract Agreement shall be **completed** and **included** as an integral part of each bidder's proposal. Successful bidder will be expected to enter into a contract Agreement with the Town. Agreement shall be signed, but not dated, by the proper business representative and submitted **with** the bid proposal. An executed contract will be forwarded to winning vendor after Council approval.

H. Freight shall be paid by vendor and should be included in unit price bid.

I. The Town is a tax-exempt organization.

J. Mail is delivered after 11:00 a.m. Monday through Friday.

K. Bid quotations **must** be submitted on the Town's quotation page(s). No exceptions.

L. THIS ORDER WILL EXPIRE JUNE 30, 2027.

M. By submission of this bid, each bidder/proposer and each person signing on behalf of any bidder certifies, and in the case of a joint bid each party thereto certifies as to its own organization, under penalty of perjury, that to the best of its knowledge and belief that each bidder is not on the list created pursuant to T.C.A. § 12-12-106 Iran

Divestment Act. For reference purposes, the list is currently available online at: State of TN_Debarred_Vendors.pdf

SECTION II – SPECIFICATIONS AND PRICE QUOTATION

Base Bid Schedule

See Attached Spreadsheets

All materials have been placed into specific categories within each department. Each category shall be considered as a whole and not broken apart. An example of the format is included in Attachment A.

The Town of Smyrna has included a spreadsheet with this document. The spreadsheet has been included for bidding convenience. Each bidder is responsible for the information and mathematical accuracy. Please check and double check your bid prior to submitting.

ESTIMATED DELIVERY TIME MUST BE INCLUDED FOR ITEMS.

Compliance with laws:

The contractor must comply with all applicable federal and state law including the prevailing wage laws.

Contractor must provide adequate proof of insurance with the bid.

INSURANCE REQUIREMENTS

The Vendor shall purchase and maintain for the duration of the contract insurance against claims for injuries to persons or damages to property which may arise from or in connection with the performance of the work hereunder by the Vendor, its agents, representatives, employees or subcontractors.

A. MINIMUM SCOPE AND LIMITS OF INSURANCE

1. **Workers Compensation**
   Workers Compensation insurance shall be in compliance with the State of Tennessee and shall be statutory. Employers Liability shall be included with a minimum limit of $500,000 per accident/per disease/per employee.

2. **Commercial General Liability**
   Commercial General Liability insurance shall have a minimum limit per occurrence of $1,000,000 and a minimum general aggregate of $2,000,000. It shall include completed operations, product liability and personal injury liability insurance.

3. **Automobile Liability**
   Automobile Liability Insurance shall have a minimum combined single limit per occurrence of $1,000,000. This insurance shall include third-party bodily injury and property damage liability for owned, hired, borrowed and non-owned automobiles.

B. DEDUCTIBLES AND SELF-INSURED RETENTIONS

Any deductibles or self-insured retentions must be declared to the Town of Smyrna. The Vendor shall be responsible for all deductibles and self-insured retentions.

C. OTHER INSURANCE PROVISIONS

The policies are to contain, or be endorsed to contain, the following provisions:

1. General Liability and Automobile Liability Coverages

   a. The Town, its elected and appointed officials, agents, employees and volunteers shall be named as an additional insured as regards negligence by the vendor.

   b. The Vendor's insurance shall be primary as respects the Town, its elected and appointed officials, agents, employees and volunteers. Any insurance or

self-insurance maintained by the Town of Smyrna shall be excess and non-contributory of the Vendor's insurance.

2. Workers Compensation and Employers Liability Coverage

   The insurer shall agree to waive all rights of subrogation against the Town, its elected and appointed officials, agents, employees and volunteers for losses arising from work performed by the Vendor for the Town of Smyrna.

3. All Coverages

   a. Coverage shall not be canceled, suspended, or voided by either party (the Vendor or the insurer) or reduced in coverage or in limits except after 30 days written notice has been given to the Town of Smyrna. Ten-day written notice of cancellation is acceptable for non-payment of premium. Notifications shall comply with the standard cancellation provisions in the Vendor's policy.

   b. Neither the acceptance of the completed work nor the payment thereof shall release the Vendor from the obligations of the insurance requirements or indemnification agreement.
   c. The insurance companies issuing the policies shall have no recourse against the Town of Smyrna for payment of premiums or for assessments under any form of the policies.

   d. Replacement certificates, policies or endorsements shall be provided to the Town for any such insurance expiring prior to the completion of services.

   e. Any failure of the Vendor to comply with reporting provisions of the policy shall not affect coverage provided to the Town, its elected and appointed officials, agents, employees and volunteers.

D. ACCEPTABILITY OF INSURERS

All required insurance shall be provided by a company or companies licensed to conduct business in the State of Tennessee. Insurance shall be underwritten by insurers with an A.M. Best Company ratings no less than an A.

E. VERIFICATION OF COVERAGE

The Vendor shall furnish the Town with Certificates of Insurance reflecting proof of required coverage. The Certificates for each insurance policy are to be signed by a person authorized by that insurer to bind coverage on its behalf. **The Certificates are to be received and approved by the Town before work commences and upon any contract renewal thereafter.**

Upon failure of the Vendor to furnish, deliver and maintain such insurance as requested, this contract, at the election of the Town, may be suspended, discontinued or terminated. Failure of the Vendor to purchase and/or maintain any required insurance shall not relieve the Vendor from any liability or indemnification under the contract.

The Certificate of Insurance naming the "Town of Smyrna" as **Additional Insured** shall be addressed to the attention of:

Town of Smyrna
Department of Safety & Risk Management
ATTN: Henry Urbina
315 S Lowry St
Smyrna, TN 37167

It can also be submitted electronically to henry.urbina@townofsmyrna.org. The subject line has to indicate the name of the project.

The Town reserves the right to request complete certified copies of all required insurance policies at any time.

F. SUBCONTRACTORS

Vendor shall include all subcontractors as insureds under its policies **OR** shall be responsible for verifying and maintaining the Certificates provided by each subcontractor. Subcontractors shall be subject to all of the requirements stated herein. The Town of Smyrna reserves the right to request copies of subcontractor's Certificates at any time.

G. WORKERS' COMPENSATION INDEMNITY

In the event Vendor is not required to provide or is exempt from providing workers' compensation coverage, the parties hereby agree that Vendor, its owners, agents and employees will have no cause of action against, and will not assert a claim against the Town of Smyrna, its elected and appointed officials, agents, employees and volunteers, under any circumstances. The parties also hereby agree that the Town of Smyrna, its elected and appointed officials, agents, employees and volunteers shall in no circumstance be, or considered as, the employer or statutory employer of Vendor, its owners, agents and employees. The parties further agree that Vendor is a wholly independent vendor and is exclusively responsible for its employees, owners, and agents. Vendor hereby agrees to protect, defend, indemnify and hold the Town of Smyrna, its elected and appointed officials, agents, employees and volunteers harmless from any such assertion or claim that may arise from the performance of this contract.

HOLD HARMLESS AND INDEMNITY REQUIREMENT:

Vendor shall indemnify and hold harmless, to the maximum extent permitted by law, the Town of Smyrna and its officers, agents, employees, volunteers, from and against any and all liability, damages, losses, (whether in contract or in tort, including personal injury, accidental death or property damage, and regardless, of whether the allegations are false, fraudulent or groundless), and costs (including reasonable attorney's fees, litigation, arbitration, mediation, appeal expenses) which in whole or in part are caused by the negligence, recklessness or intentional wrongful misconduct of the Vendor and

persons employed by or utilized by the Vendor in Vendor's performance of this Agreement.

The vendor further agrees to protect, defend, and save the Town, its elected and appointed officials, agents, employees and volunteers while working in the scope of their duties as such, harmless from and against all claims, demands, and causes of action of any kind of character, including the cost of their defense, arising in favor of the vendor's employees or third parties on account of bodily or personal injuries, death or damage to property arising out of services performed or omissions of services or in any way resulting from the acts of omissions of the vendor and/or its agents, employees, subcontractors, representative of the Town under this agreement.

Pursuant to Tennessee Attorney General Opinion 93-01, the Town will not indemnify, defend or hold harmless in any fashion the Vendor from any claims arising from any failure, regardless of any language in any attachment or other document that the Vendor may provide.

APPLICABLE LAW:

Any contract resulting from this ISQ shall be governed by and construed under the laws of the State of Tennessee.

AGREEMENT

This Agreement is made and entered into as of this 12th day of May, 2026, by and between Richards Mfg Co Sales LLC, a _____ (the "Bidder") and the Town of Smyrna, Tennessee, a Tennessee municipal corporation (the "Town") for the purpose of Utilities Materials.

WHEREAS, the Bidder has submitted a quotation for the provision of certain products and/or services to the Town, all in accordance with the terms of the Invitation to Submit Quotations attached hereto and incorporated herein by reference as if set forth at length verbatim as Exhibit A (the "ISQ"), and which Proposal from the Bidder is attached hereto and incorporated herein by reference as if set forth at length verbatim as Exhibit B (the "Quotation"); the ISQ and the Quotation, together with any and all ancillary documents thereto, shall be collectively referred to herein as the "Bid Documents"; and

WHEREAS, the Town now desires to accept the Bidder's quotation, in accordance with the terms set forth in such Bid Documents.

NOW, THEREFORE, in consideration of the mutual covenants contained herein, and for other good and valuable consideration, the receipt and sufficiency of which is hereby acknowledged, the undersigned do hereby agree as follows:

1. Acceptance of Bid Documents. The terms of the Bid Documents, as incorporated herein by reference, are hereby accepted by the parties hereto. The Bidder hereby agrees to provide the goods and/or services contemplated by such Bid Documents in accordance with the terms set forth therein. The Town hereby accepts the Bidder's quotation to provide the goods and/or services contemplated by such Bid Documents in accordance with the terms set forth therein.

2. Entire Agreement. This Agreement, including the exhibits and any other documents referred to herein or therein, which form a part hereof, contains the entire understanding of the parties with respect to its subject matter. There are no restrictions, agreements, promises, warranties, covenants or undertakings other than those expressly set forth herein or therein. This Agreement supersedes all prior written or oral agreements and understandings between the parties with respect to its subject matter and may not be altered, modified or amended, in whole or in part, except by the express written authorization and consent of the parties hereto.

3. Severability. This agreement constitutes the product of negotiations of the parties hereto and any enforcement of hereof will be interpreted in a neutral manner and not more strongly against any party based upon the source of the draftsmanship of this Agreement. If any provision of this Agreement shall be held invalid or unenforceable by a court of competent jurisdiction, the remaining provisions hereof shall continue to be fully effective.

4. Limitation of Liability. The Town of Smyrna shall not be liable for any loss, claim, expense or damage caused by, contributed to or arising out of the acts or omission of Bidder or third parties, whether negligent or otherwise.

5. Warranties. The Bidder warrants to the Town that all materials and equipment furnished under this Contract will be new unless otherwise specified, and that all work will be of good quality, free from faults and defects, suitable for the purpose for which the materials and equipment are furnished, and in conformance with the Agreement. If it does not perform as warranted, Bidder shall use all commercially reasonable efforts to correct the product(s) so that it operates in all material respects in conformity with the written representations of Bidder. If Bidder cannot correct the product(s) within a reasonable period of time, Bidder shall refund the purchase price of the product(s). All work not conforming to these requirements, including substitutions not properly approved and authorized, may be considered defective.

6. Software Deadline, Testing and Acceptance: If applicable to the Agreement, software provided by Bidder shall be installed for the purposes of testing, as stated herein below, no later than one hundred twenty (120) days from the effective date of this Agreement unless the parties, in writing, set a different specific date. In Addition, software provided by Bidder to The Town is subject to inspection and testing to verify that the software conforms to its written specifications and to ensure it meets The Town's needs. The Town shall have seven (7) business days after the software is installed to perform testing of the software using The Town's data. The Town shall provide Bidder with written notice of acceptance or rejection of the software five (5) business days or less after the end of the testing period. If the Town does not provide timely written notice of acceptance or rejection to Bidder, the software shall be deemed to be accepted by The Town. If the software is rejected, The Town may, at its sole discretion, either (1) return the software and receive a refund of all fees paid with respect thereto, or (2) allow Bidder to repair or replace the software, without charge, in a timely manner. In the event The Town elects to allow the Bidder to repair or replace the software, The Town shall have an additional (7) business days in which to accept or reject the software as laid out hereinabove.

7. Use of The Town's Logo or Name: Bidder shall not use The Town's name or any logo in marketing or publicity materials or for marketing or publicity purposes without the prior written authorization from The Town. Bidder shall not issue, publish, or divulge any materials developed or used in the performance of this Agreement or make any statement to the media relating to this Agreement without the prior written consent of The Town.

8. Indemnification. The parties hereto agree that Bidder shall indemnify The Town for any and all claims of negligence, tortious conduct or otherwise unlawful acts committed by Bidder in the performance of their obligations under the terms of this agreement, including any and all attachments or exhibits thereto and Bidder agrees to pay any and all costs associated with the enforcement of the terms of this indemnity agreement by The Town, including but not limited to, court costs, civil judgments, assessments or any other reasonable fees associated therewith. This clause shall survive the expiration or termination of this Agreement and shall remain in full force and effect until the expiration of any applicable statute of limitation. In addition, Article II, Section 29 of the Tennessee Constitution prohibits municipalities from lending their credit to private of public entities and, therefore, prohibits an agreement by The Town to indemnify a third party or agree to a limitation of liability provision.

9. Non-Appropriation: Bidder acknowledges that The Town is a governmental entity, and the validity of this Agreement is based upon the availability of public funding under its authority. In the event The Town fails to appropriate funds or make monies available for any fiscal year covered by the term of this Agreement for services to be provided, this Agreement shall be terminated on the last day of the fiscal year for which funds were appropriated or monies made available for such purposes without liability to The Town, and such termination shall not be a breach of the Agreement, and any unused payment made to Bidder shall be returned to The Town.

10. Tax Exemption: As a tax-exempt entity, The Town shall not be responsible for sales or use taxes incurred for products or services. The Town shall supply Bidder with its Sales and Use Tax Exemption Certificate upon Bidder's request. Bidder shall bear the burden of providing its suppliers with a copy of The Town's tax exemption certificate and Bidder shall assume all liability for such taxes, if any, that should be incurred.

11. Attorney Fees. The parties hereto agree that The Town shall be in no event liable for any attorney's fees which Bidder may incur due to breach of this Agreement by either party; and further, The Town shall not acquiesce to any term in any document that indicates or infers The Town may or shall be responsible for the Attorney's fees of another party or the Bidder's attorney fees.

12. Boycott of Israel. The Bidder certifies that it is not currently engaged in, and covenants that it will not, for the duration of the Contract, engage in a Boycott of Israel, as that term is defined in Tenn. Code Ann. § 12-4-119.

13. Failure to perform. The parties agree, in the event Bidder fails to perform any obligation, other than with regards to the date of delivery, set out in this Agreement, the Town shall be reimbursed by Bidder for any and all expenses associated with having to obtain a new provider to finish out the contracted term, including, but in no way limited to, any charges/fees, which are above and beyond the amount the Town would have paid to Bidder to complete the same task; provided, however, that if the failure, by its nature, is one that can be cured, the Bidder shall have fifteen (15) business days after receipt of written notice from the Town to cure said failure to perform. The parties hereby agree, unless a specific date of delivery is provided in this Agreement or other bid documents, all deliveries shall be made to the Town no later than ninety (90) days from the date of order. The parties further agree that if Bidder, in good faith, is not able to meet this ninety (90) day deadline of delivery due to forces beyond his, her or its control, that were unforeseeable at the time of signing this contract, then this entire Agreement shall be voidable at the sole discretion of the Town. Should the Town elect to void this Agreement due to Bidder's good faith inability, due to forces beyond his, her or its control, and which were unforeseeable at the time of signing this Agreement to meet the delivery deadline, then neither party shall be deemed to have breached this Agreement, and Bidder shall return all monies, within seven (7) business days, paid by the Town for the products/items that could not be delivered in the allotted time.

14. Unilateral Modification of Agreement Not Permitted: Bidder may make unilateral changes to its Privacy Policy, provided any such changes are subject to the provisions of this Agreement but shall not materially alter the use of the service or reduce the level of protection provided to the Town at the time of the execution of this Agreement. Except as provided in the preceding sentence, notwithstanding anything in this Agreement to the contrary, any change to this Agreement made by Bidder that is not in writing and that is not properly executed by the signatures of authorized representatives of the parties hereto, including attestation by The Town's Clerk and approved as to form by the Town Attorney are subject to the terms and conditions of this Agreement.

15. Changes to Terms: Except as provided in Paragraph No. 13 above pertaining to Bidder's Privacy Policy, Bidder shall provide The Town written notice, sent in care of Town Attorney's Office, Smyrna, Tennessee, 315 South Lowry Street, Tennessee 37167, of any proposed change to this Agreement at least ninety (90) days prior to being effective to The Town. The Town shall have thirty (30) days after receiving the written notice to terminate this Agreement, and such cancellation shall not be a breach of this Agreement. Bidder will refund to The Town any payment made by The Town to Bidder equal to the difference between the number of months the payment was intended for and the number of months remaining on this Agreement that the fee was intended to cover.

16. Price Assurance: Unless specifically stated in this Agreement or other bid documents, the bid price shall be valid for the full term of this Agreement. If the Bidder, specifically states that he, she or it cannot honor the bid price for the full term of this Agreement; then this Agreement is voidable at the sole discretion of the Town, if at any time during the full term of this Agreement, Bidder requests to raise the bid

price. If the Town elects to void this Agreement, at its sole discretion, it shall not be deemed to be a breach of the contract by either party.

17. Confidentiality. The Town, as a Tennessee Municipal Corporation is subject to the Tennessee Open Records Act, set out in T.C.A. §10-7-503 et seq; therefore, this Agreement and all documents or materials, in any format, including, but not limited to paper, electronic or virtual, that are public records pursuant to law, are not confidential and are subject to disclosure. The Town will respond to all proper Open Records Requests in the time allowed by law, without any requirement to disclose such request to Bidder or provide Bidder with notice or the time to obtain a protective order. The Town does not have the burden of establishing that information is not confidential information or that its release is authorized to release the records. This section 16 serves to meet such burden and authorization of disclosure.

18. Mediation. The Town may, at its option, require the attempted resolution of any dispute arising under this Agreement by mediation prior to the filing of any lawsuit or other claim. Should any dispute arise, Bidder shall provide the Town notice of any intent to file suit by certified mail. The Town shall notify the Bidder of its intent to exercise its right to mediation within thirty (30) days of receiving such notice. If the Town does not exercise its right to mediation, Bidder may file suit. Any mediator selected under this clause shall be agreed upon by the parties and the costs of such mediation shall be divided and paid equally between the parties.

19. No Presumption Against Drafter: The parties are both business entities having substantial experience with the subject matter of this Agreement, and each has fully participated in the negotiation and drafting of this Agreement. Accordingly, this Agreement shall be construed without regard to the rule that ambiguities in a document are to be construed against the draftsman. No inferences shall be drawn from the fact that the final, duly executed Agreement differs in any respect from any previous draft hereof.

20. Governing Law. This Agreement shall be deemed to have been executed and delivered within the State of Tennessee, and the rights and obligations of the parties shall be construed and enforced in accordance with, and governed by, the laws of the State of Tennessee. The parties agree that all obligations of the parties are performable in Smyrna, Tennessee.

21. Choice of Forum and Venue. The parties' choice of forum and venue shall be exclusively in the courts of Rutherford County, Tennessee or the United States District Court, for the Middle District of Tennessee. The parties hereby waive their right to a jury trial. Any provision of the Agreement held to violate a law or regulation shall be deemed void, and all remaining provisions shall continue in force.

IN WITNESS WHEREOF, the undersigned have executed this Agreement as of the date set forth above.

TOWN OF SMYRNA, TENNESSEE

By: _____
Name: Mary Esther Reed
Title: Mayor

ATTEST:

_____
Amber Hobbs, Town Clerk

BIDDER:

By: Jesus Freitas
Title: Senior Sales Manager - Gas Dept.

ATTEST:

_____

SECTION III - SPECIFICATIONS COMPLIANCE

Unless otherwise noted, all quotations for the annual gas, water and sewer materials shall be in complete accordance with the specifications detailed herein.

Bidders shall note in the space provided below any exceptions or deviations in any way from the specifications of any section of this ISQ. Bidders should provide complete detail of exceptions or deviations.

Proposal Exceptions

Section	Brief Description
Section I H	Prices provided are NOT Freight Allowed / Bid is Prepaid + Add

By signature below, vendor acknowledges any quotation to be in full compliance with all aspects of each section of the ISQ not noted above. The undersigned hereby declares that no person or party other than the undersigned has any interest whatever in this proposal, that it is without any connection or collusion with any person or persons making or having made any proposal for the same work and without any previous understanding with such person or persons as to relative prices, obviating competition, and that it is made in good faith.

Richards Mfg Co Sales LLC
COMPANY

973-371-1771 Ext. 417
TELEPHONE NUMBER

Jesus Freitas
REPRESENTATIVE NAME

Senior Sales Manager - Gas Dept.
REPRESENTATIVE TITLE

SIGNATURE

JesusF@Richards-Mfg.com
E-MAIL ADDRESS

Attachment A

Cutoffs

DESCRIPTION	Estimated Bid Qty	Vendor A Unit Price	Cost	Vendor B Unit Price	Cost	Vendor C Unit Price	Cost
3/4" STOPCOCK; JOMAR 241-004B	150	$12.00	$1,800.00	$9.00	$1,350.00	$1.00	$150.00
3/4" STOPCOCK, HIGH PRESSURE, MUELLER	20	$18.00	$360.00	$17.00	$340.00	$2.00	$40.00
1" STOPCOCK; JOMAR 241-005B	30	$13.75	$412.50	$13.00	$390.00	$3.00	$90.00
1 1/4" STOPCOCK; 175 MAOP MUELLER	10	$14.50	$145.00	$16.00	$160.00	$4.00	$40.00
1 1/2" STOPCOCK; 175 MAOP MUELLER	10	$15.00	$150.00	$14.00	$140.00	No Bid	$0.00
2" STOPCOCK; 175 MAOP MUELLER	30	$16.00	$480.00	$20.00	$600.00	$6.00	$180.00
	Totals		$3,347.50		$2,980.00		$500.00
	Low Bidder						
	Incomplete Bid						

Category Calculation Guidelines:

1. Multiply estimated quantity times bid unit price for cost of each category item
2. Add costs in category for each vendor to obtain category total cost per vendor
3. Any unit price omitted from category will result in incomplete bid for given category
4. Low bidder, meeting all other requirements, shall be awarded the entire category

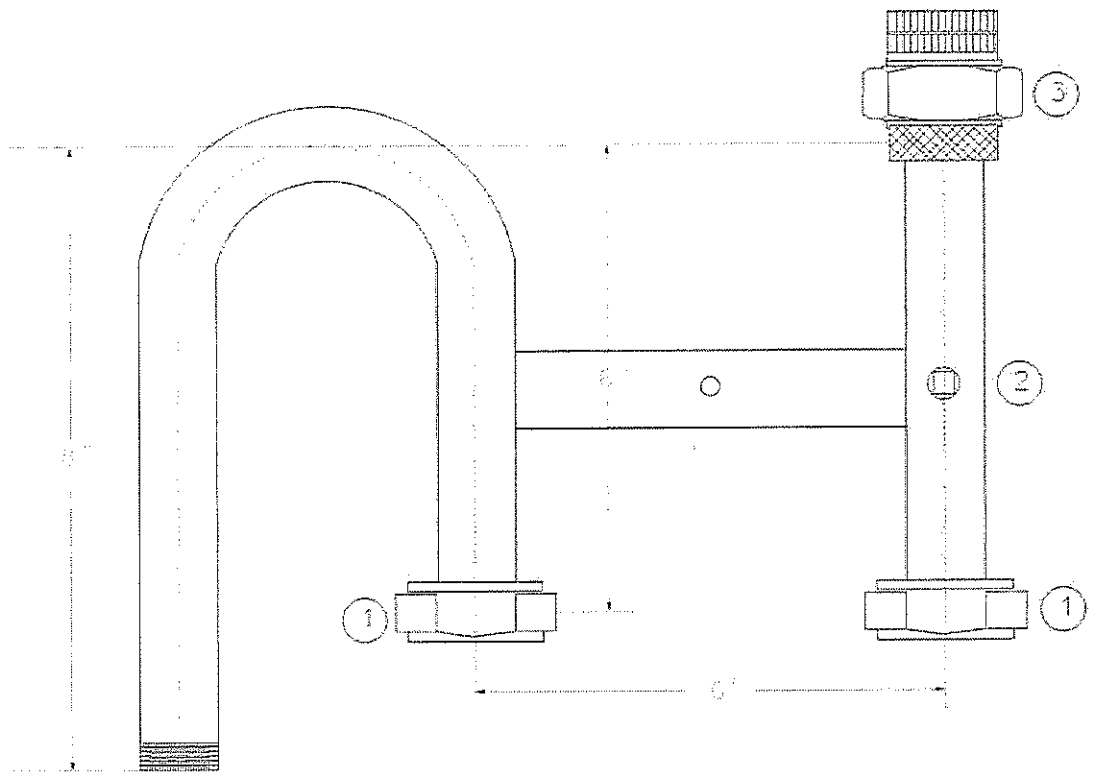

NOTES:

1. GRAY EPOXY
2. TEST 100# FOR 10 SEC.
3. ASSEMBLE AND SHIP
4. 1" SCH 40 PIPE

ITEM	YEAR	DESCRIPTION
		30 LT SWIVEL AND NUT
		1 TEST PLUG
		1" INSULATED UNION

TOWN OF SMYRNA
[illegible]

SMYRNA GAS SYSTEM
1" METER BAR

81MR25075-TOP. NR

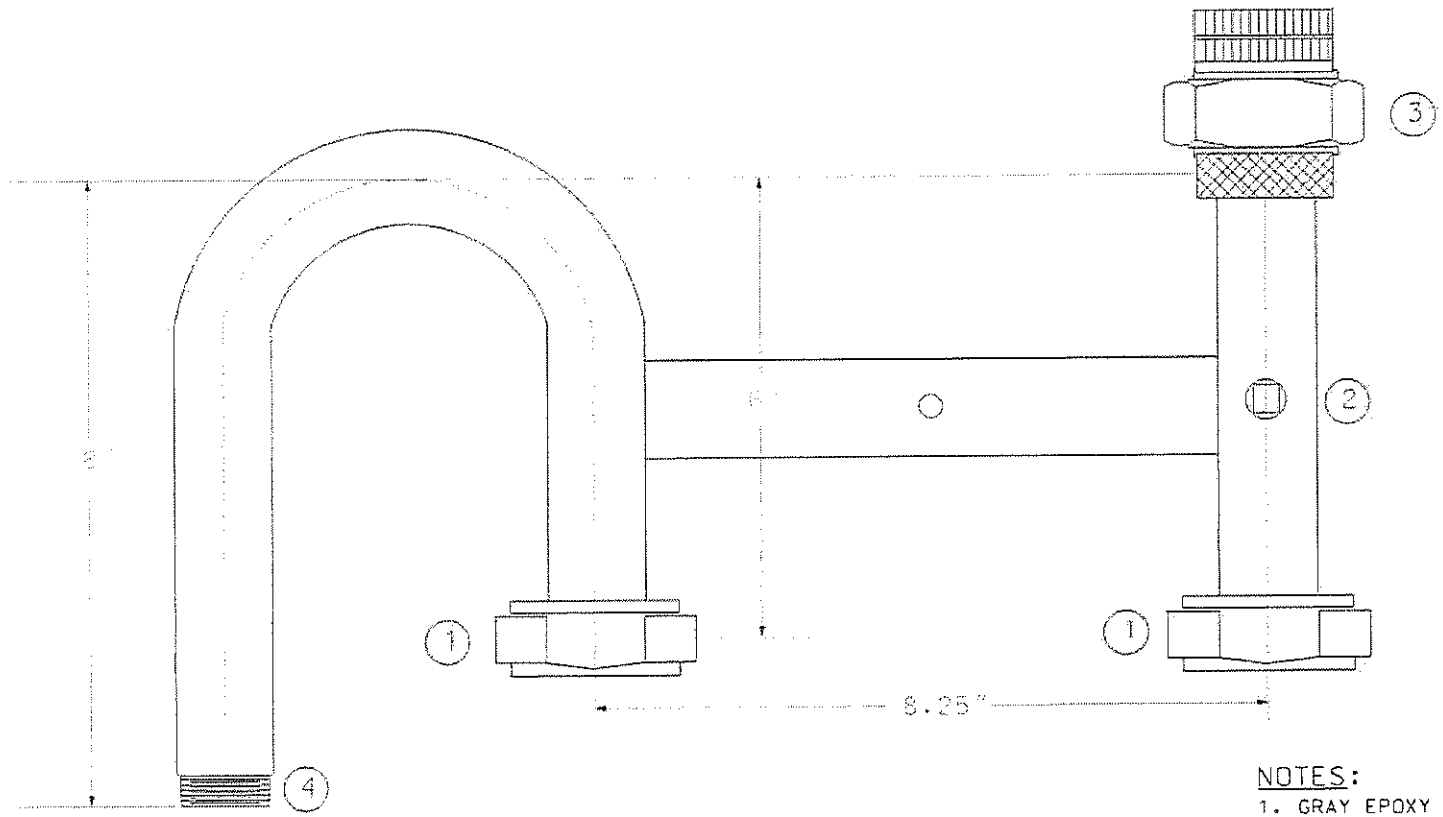

NOTES:

1. GRAY EPOXY
2. TEST 100# FOR 10 SEC.
3. ASSEMBLE AND SHIP
4. 1¼" SCH 40 PIPE

ITEM	QUAN	DESCRIPTION
[illegible]	[illegible]	50 LT SWIVEL AND NUT
[illegible]	[illegible]	¼" TEST PLUG
[illegible]	[illegible]	[illegible] INSULATED UNION
	[illegible]	[illegible] INLET

TOWN OF SMYRNA
[illegible]

SMYRNA GAS SYSTEM
1¼" METER BAR

81MR4255-TOP-NR

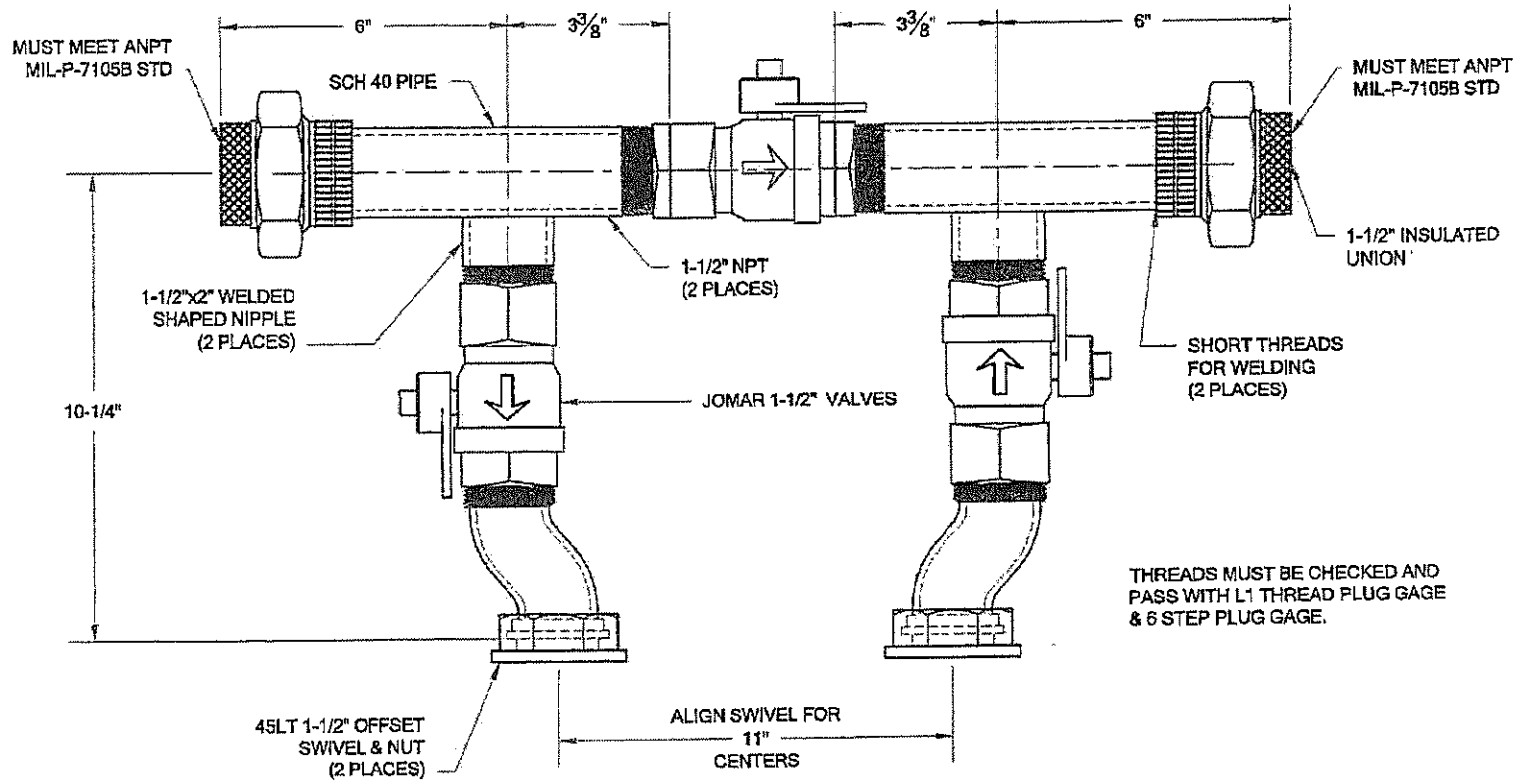

NOTES:

1. GRAY EPOXY
2. TEST 100# FOR 10 SEC.
3. ASSEMBLE AND SHIP

TOWN OF SMYRNA
315 E. Lowry Street, Smyrna, TN 37167
(615)355-5711 Fax: (615)355-5799

SMYRNA GAS SYSTEM
200 / 1000 WITH BYPASS

Bypass - Pref - 1.5-45LT

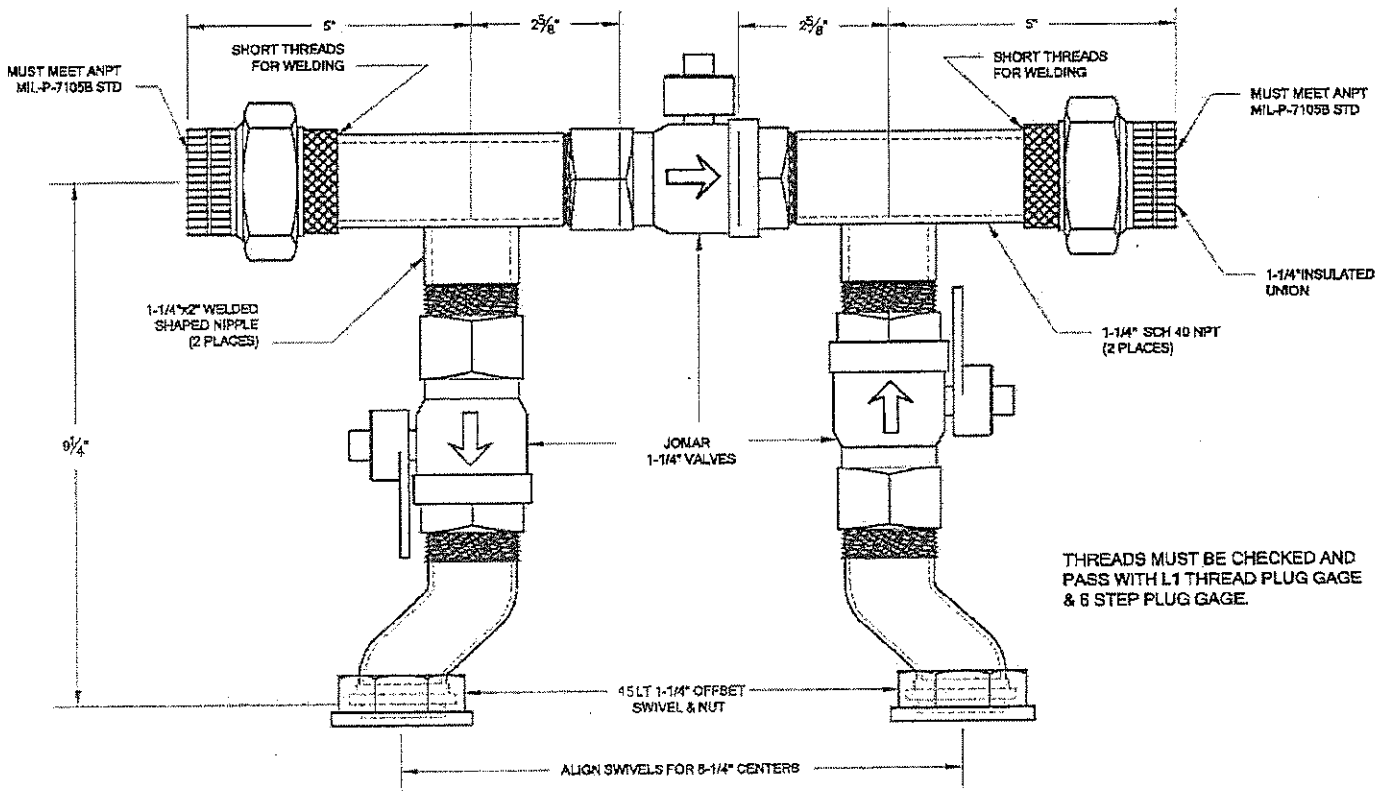

NOTES:

1. GRAY EPOXY
2. TEST 100# FOR 10 SEC.
3. ASSEMBLE AND SHIP

TOWN OF SMYRNA

SMYRNA GAS SYSTEM
CGD WITH BYPASS

Smyrna - 3-Valve - 45LT

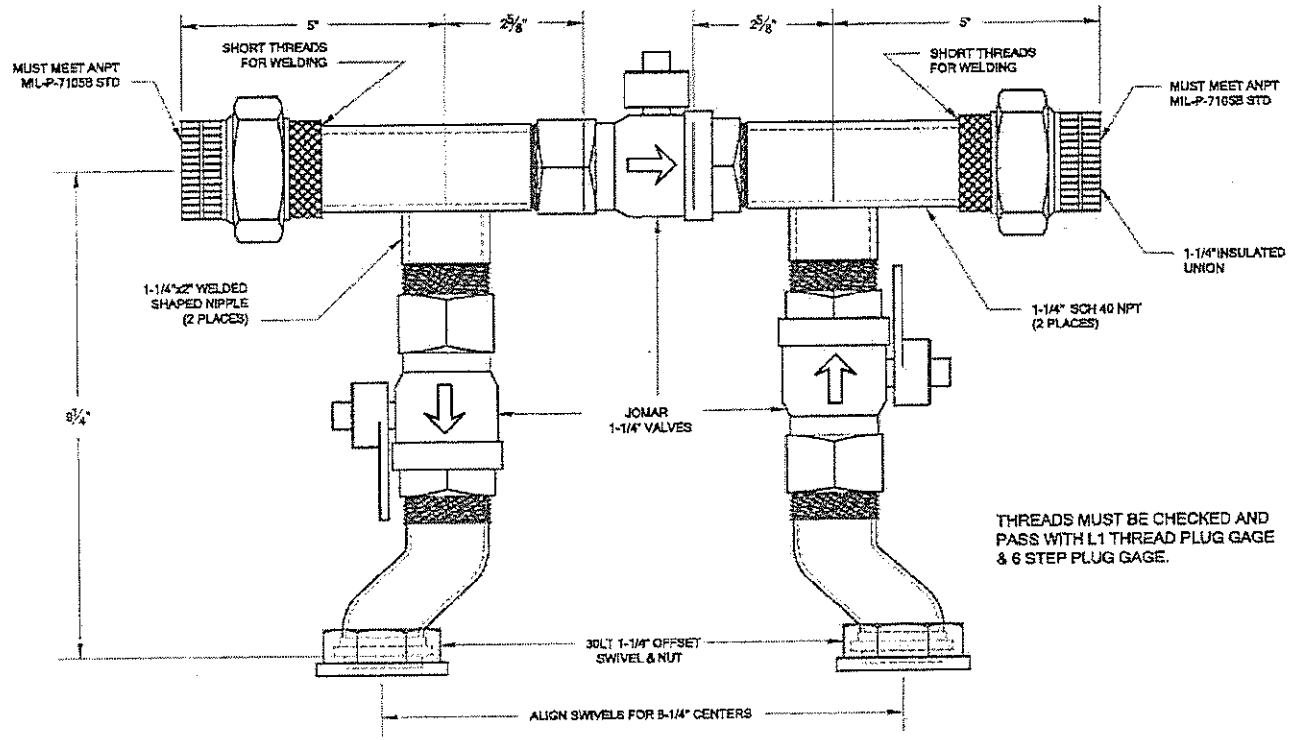

NOTES:

1. GRAY EPOXY
2. TEST 100# FOR 10 SEC.
3. ASSEMBLE AND SHIP

TOWN OF SMYRNA
315 S. Lowry Street, Smyrna, TN 37167
(615)355-5711 Fax: (615)355-5719

SMYRNA GAS SYSTEM
425 WITH BYPASS

Smyrna - 3-Valve

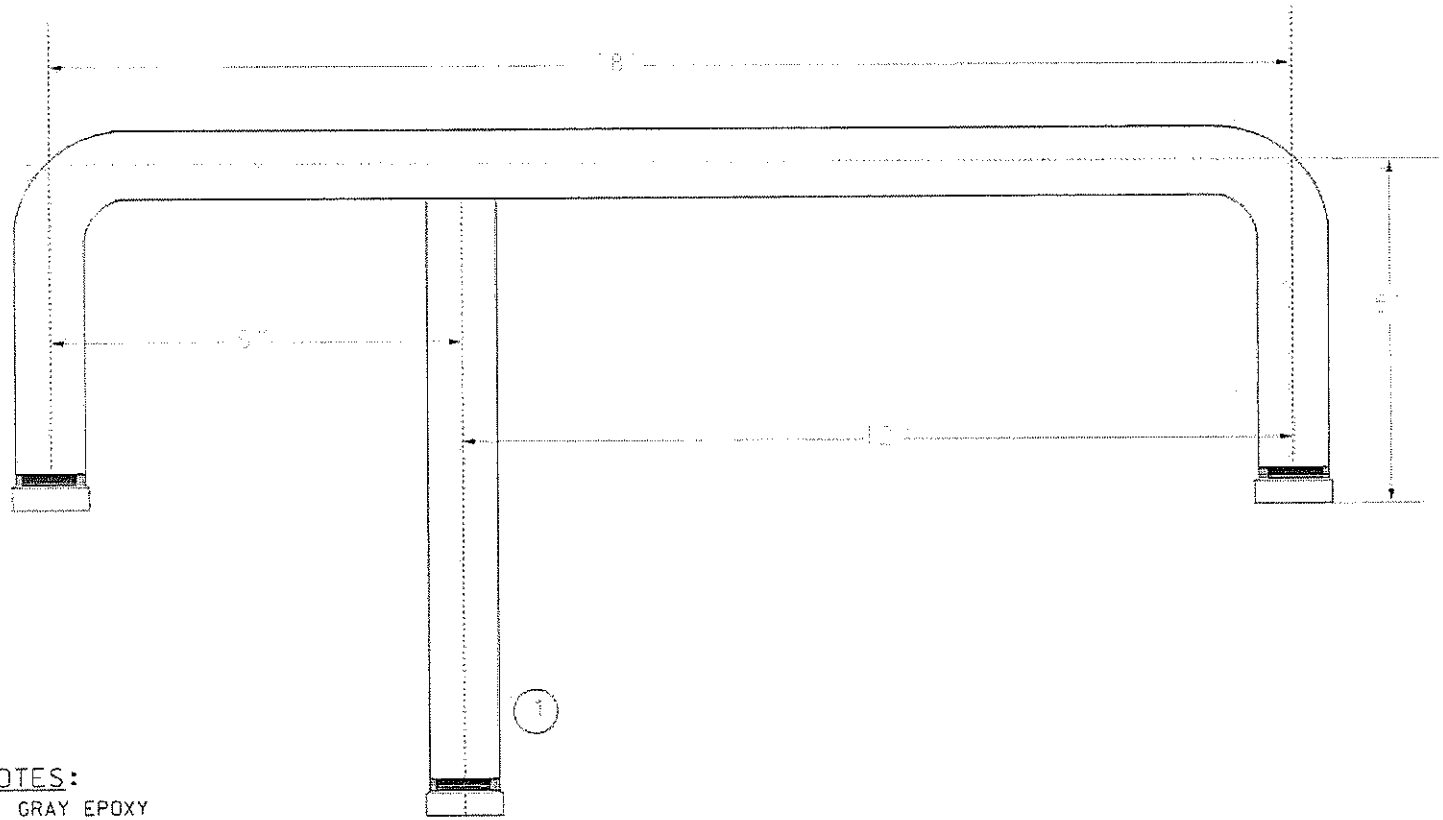

NOTES:

1. GRAY EPOXY
2. TEST 100# FOR 10 SEC.
4. 1" SCH 40 PIPE

ITEM	QTY	DESCRIPTION
	1	1" NIPPLE, 9" LONG

TOWN OF SMYRNA
315 S. Lowry Street, Smyrna TN 37167
(615)355-5711 Fax (615)355-5799

SMYRNA GAS SYSTEM
2 METER MANIFOLD

Smyrna - 2 - Grans

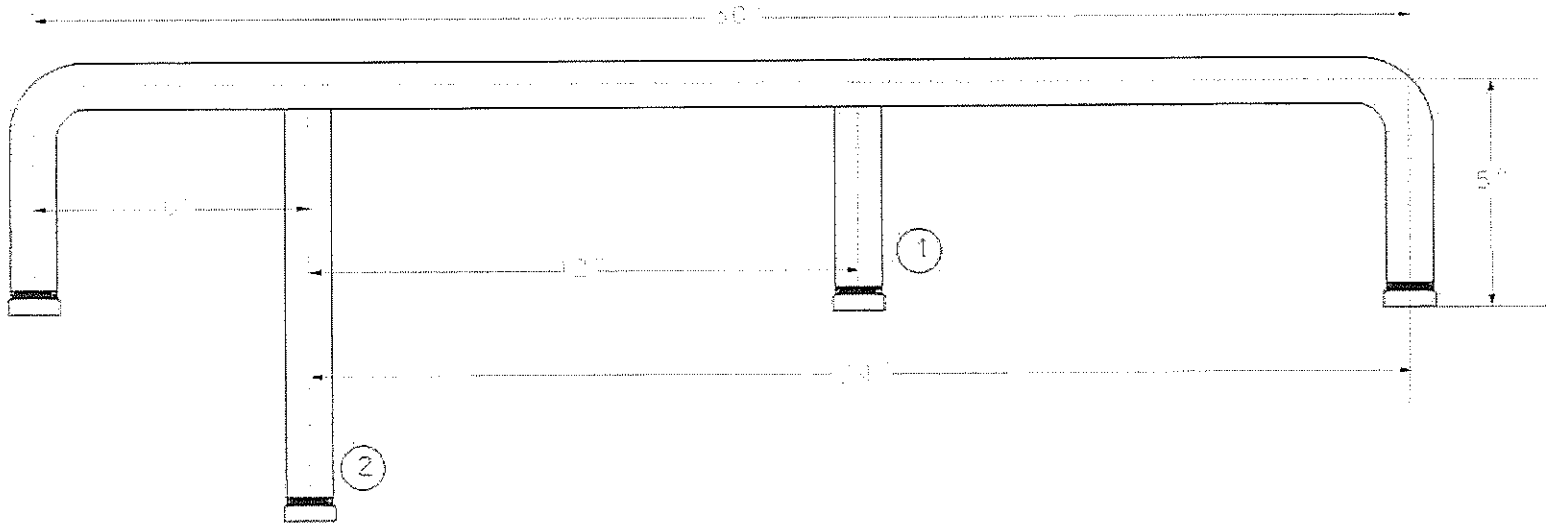

NOTES:

1. GRAY EPOXY
2. TEST 100# FOR 10 SEC.
4. 1" SCH 40 PIPE

ITEM	QUAN	DESCRIPTION
1	1	1" NIPPLE, 4½" LONG
2	1	1" NIPPLE, 9" LONG

TOWN OF SMYRNA
315 S. Lowry Street, Smyrna, TN 37167
(615)355-5711 Fax (615)355-5799

SMYRNA GAS SYSTEM
3 METER MANIFOLD

Smyrna - 3-Gang

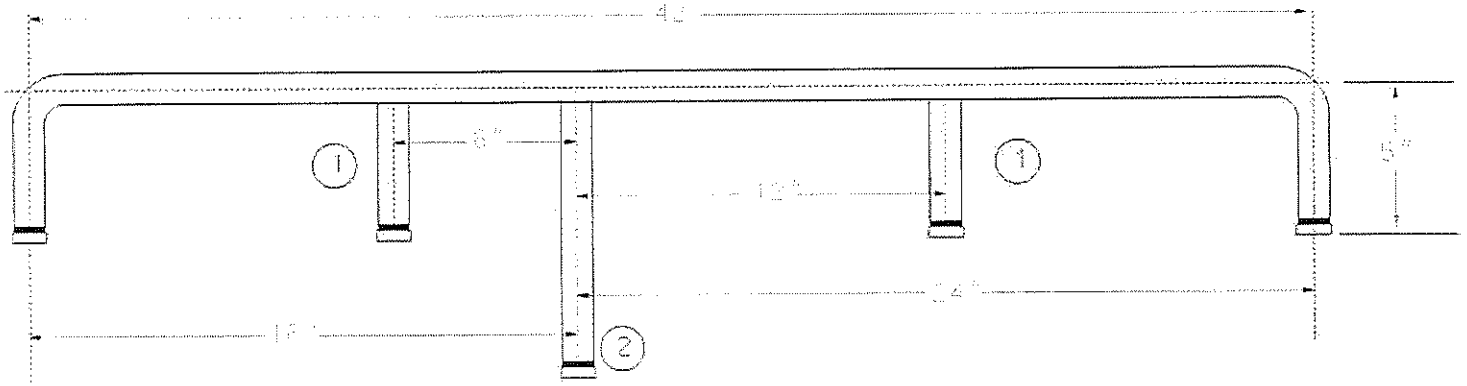

NOTES:

1. GRAY EPOXY
2. TEST 100# FOR 10 SEC.
4. 1" SCH 40 PIPE

ITEM	QTY	DESCRIPTION
		1" NIPPLE, 4" LONG
	1	1" NIPPLE, 9" LONG

TOWN OF SMYRNA
[illegible]

SMYRNA GAS SYSTEM
4 METER MANIFOLD

Smyrna - 4 - Gang

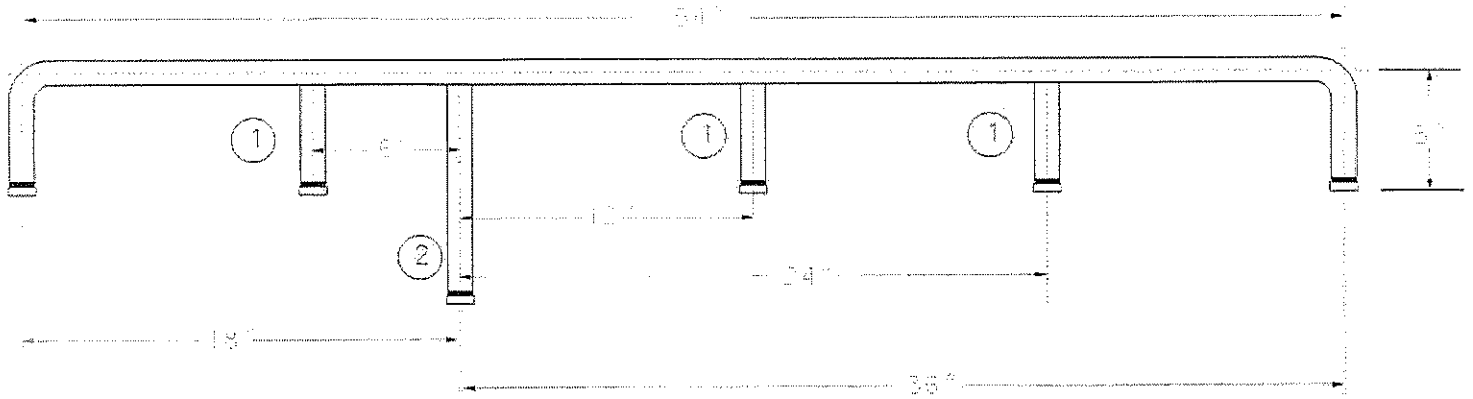

NOTES:

1. GRAY EPOXY
2. TEST 100# FOR 10 SEC.
4. 1" SCH 40 PIPE

ITEM	QUAN	DESCRIPTION
1	2	1" NIPPLE, 4½" LONG
2	1	1" NIPPLE, 9" LONG

TOWN OF SMYRNA
315 S Lowry Street Smyrna TN 37167
(615)355-5711 Fax (615)355-5799

SMYRNA GAS SYSTEM
5 METER MANIFOLD

Smyrna-5-Gang

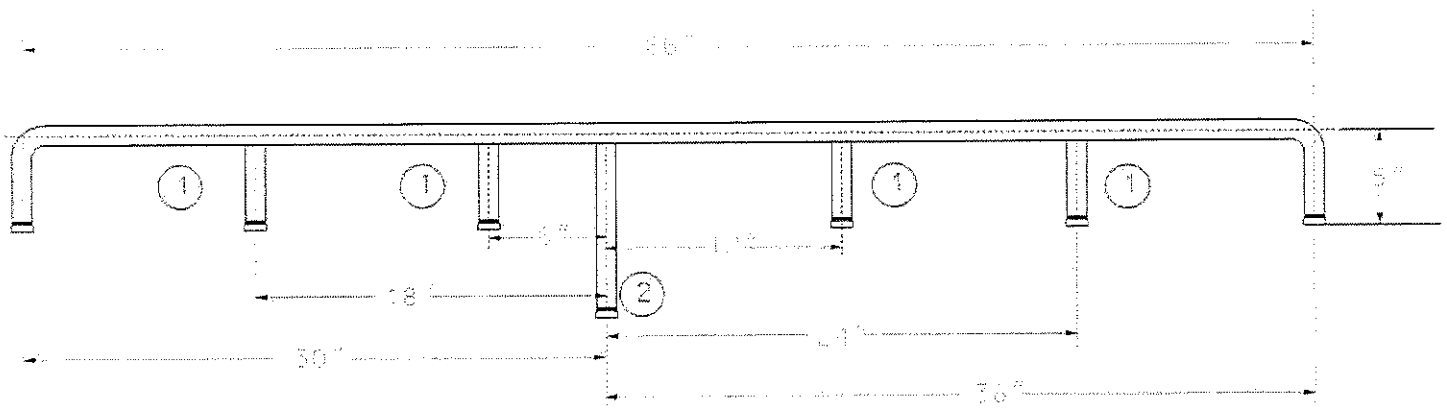

NOTES:

1. GRAY EPOXY
2. TEST 100# FOR 10 SEC.
4. 1" SCH 40 PIPE

ITEM	PART #	DESCRIPTION
		1" NIPPLE, 4 1/2" LONG
		1" NIPPLE, 9" LONG

TOWN OF SMYRNA
SMYRNA GAS SYSTEM
5 METER MANIFOLD

Smyrna - 6 - Gas

Richards Mfg Co Sales LLC

GAS METER BID LIST ~~2025-2026~~ 2026-2027

		Smyrna									
GAS	ITEM #	DESCRIPTION	SIZE	APPROVED PART #	ALTERNATE PART #	UNIT	EST QTY FY 26/27	BIDDER	UNIT PRICE	ESTIMATED DELIVERY TIME	Richards PN
		PREFABRICATED GAS ROTARY METER SETS									
G	7	METER SET; 3.5M ROTARY METER SET - WITHOUT METER/EVC	3.5M/3M	SEE DRAWING	N/A	EA	6	RICHARDS	$4,624.64	8 Weeks	SMYRNA-3M
G	8	METER SET; 5.5M ROTARY METER SET - WITHOUT METER/EVC	5.5M/5M	SEEDRAWING	N/A	EA	2	RICHARDS	$4,673.28	8 Weeks	SMYRNA-5M
G	9	METER SET; 9 M ROTARY METER SET - WITHOUT METER/EVC	9M/7M	SEE DRAWING	N/A	EA	2	RICHARDS	$5,159.96	8 Weeks	SMYRNA-9M-7M
G	10	METER SET; 14 M ROTARY METER SET - WITHOUT METER/EVC	14M/11-16M	SEE DRAWING	N/A	EA	3	RICHARDS	$5,135.15	8 Weeks	SMYRNA-14M-9M
GAS	ITEM #	DESCRIPTION	SIZE	APPROVED PART #	ALTERNATE PART #	UNIT	EST QTY FY 26/27	BIDDER	UNIT PRICE	ESTIMATED DELIVERY TIME	
		DIAPHRAM GAS METERS									
G	15	METERS, AC 250 TC; ELSTER/AMERICAN - 5# CASE, 4 DIGIT ODM. INDEX; 20LT	AC 250	AC 250 TC 6" C-C	SENSUS R-275 TC 6" C-C	EA	250	No Bid			
G	16	METERS, AL 425 TC; ELSTER/AMERICAN - 10# CASE, 4 DIGIT ODM.INDEX; 30LT	AL 425	AL 425 TC 8.25" C-C	SENSUS R-415 TC 8.25" C-C	EA	150	No Bid			
G	17	METERS, AC 630 TC; ELSTER/AMERICAN - 25# CASE, 4 DIGIT ODM. INDEX; 45 LT	AC 630	AC 630 TC 8.25" C-C	SENSUS SONIX 600 TC 6" C-C	EA	12	No Bid			
G	18	METERS, AL 800 TC; ELSTER/AMERICAN - 20# CASE, 5 DIGIT ODM. INDEX; 45 LT	AL 800	AL 800 TC 11" C-C	SENSUS SONIX 880 TC 6" C-C	EA	4	No Bid			
G	19	METERS, AL 1000 TC; ELSTER AMERICAN - 25# CASE, 5 DIGIT ODM. INDEX; 45 LT	AL 1000	AL 1000 TC 11" C-C	N/A	EA	2	No Bid			
GAS	ITEM #	DESCRIPTION	SIZE	APPROVED PART #	ALTERNATE PART #	UNIT	EST QTY FY 26/27	BIDDER	UNIT PRICE	ESTIMATED DELIVERY TIME	
		ROTARY GAS METERS									
G	23	3.5M RABO/ROOTS ROTARY METER,W/TCI INDEX, 5 DIGIT, CCF,THERMO-WELL W/GASKET AND BOLT INTSALL KIT,GASKET STRAINER,FULL FACE,RUBBER W/SS 40 MESH	3.5M/3M	G65/TCIRAB-BD-B1A-FAFA-GA-AA0CACACA-0000-00	B3:3M175 ROOTS	EA	6	No Bid			
G	24	5.5M RABO/ROOTS ROTARY METER,W/TCI INDEX,5 DIGIT CCF ,THERMO-WELLW/GASKET AND BOLT INSTALL KIT,GASKET STRAINER,FULL FACE,RUBBER W/SS 40 MESH	5.5M/5M	G100/TCIRAB-BD-B1A-FAFA-GA-AA0CACACA-0000-00	B3:5M175 ROOTS	EA	2	No Bid			
G	25	9 M RABO/ROOTS ROTARY METER, W/TCI INDEX ,5 DIGIT CCF,THERMO-WELL W/GASKET AND BOLT INSTALL KIT,GASKET STRAINER,FULL FACE,RUBBER W/SS 40 MESH	9M/7M	G160/TCIRAB-BD-B1A-FAFA-GA-AA0CACACA-0000-00	B3:7M175 ROOTS	EA	2	No Bid			
G	26	14 M RABO/ROOTS ROTARY METER,W/TCI INDEX,5 DIGIT CCF ,THERMO-WELL W/ GASKET AND BOLT INSTALL KIT,GASKET STRAINER,FULL FACE,RUBBER W/SS 40 MESH	14M/11M	G250/TCIRAB-BD-B1A-FAFA-GA-AA0CACACA-0000-00	B3:11M175 ROOTS	EA	1	No Bid			
G	26A	16M RABO/ROOTS ROTARY METER,W/TCI INDEX, 5 DIGIT, CCF,THERMO-WELL W/GASKET AND BOLT INTSALL KIT,GASKET STRAINER,FULL FACE,RUBBER W/SS 40 MESH	16M		B3:16M175 ROOTS	EA	2	No Bid			
		* ALL ROTARY METERS SHALL COME WITH AMR MOUNTING BRACKET		22-1929							
GAS	ITEM #	DESCRIPTION	SIZE	APPROVED PART #	ALTERNATE PART #	UNIT	EST QTY FY 26/27	BIDDER	UNIT PRICE	ESTIMATED DELIVERY TIME	
		TURBINE GAS METERS									
G	27	METER, SENSUS T-18	4"	T-18		EA	1	No Bid			
G	28	METER, SENSUS AAT -18	4"	AAT-18		EA	1	No Bid			

GAS METER BID LIST ~~2025-2026~~

2026 - 2027

G	29	METER, SENSUS AAT - 27	6"	AAT-27		EA	1	No Bid			
G	30	METER, SENSUS AAT - 57	6"	ATT-57		EA	1	No Bid			
G	31	METER;SENSUS AAT-60	8"	ATT-60		EA	1	No Bid			
GAS	ITEM #	DESCRIPTION	SIZE	APPROVED PART #	ALTERNATE PART #	UNIT	EST QTY FY 26/27	BIDDER	UNIT PRICE	ESTIMATED DELIVERY TIME	
		ELECTRONIC CORRECTORS									
G	37	HONEYWELL EC-350 CORRECTOR W/10' DRIVE, 0-60PSI PRESSURE & TEMP		EC350-C0B-00200000-A-B15110-A1-MW,N3-200	EAGLE MPII MVC,INDEX.0-102PSI-TEMP#MVC-0047M1	EA	3	No Bid			
G	38	HONEYWELL EC-350 CORRECTOR W/100' DRIVE, 0-300PSI PRESSURE & TEMP		EC350-E0B-00200000-A-B15110-A1-MW,N3-200	EAGLE MPII MVC,INDEX.0-290PSI-TEMP#MVC-0048M1	EA	1	No Bid			
G	39	HONEYWELL TC-INDEX, FOR AMCO C-BODY ROTARY METERS		TCIAMC-BD-B1A-FAFA-BA-AA0AEBA0A-0000-00		EA	1	No Bid			
G	40	HONEYWELL TC-INDEX, FOR ROOTS B3 & ROMET 3000 ROTARY METERS		TCIDB3-BD-B2A-FAFA-BA-AA0AEBA0A-0000-00		EA	1	No Bid			
G	41	HONEYWELL TC-INDEX, FOR ROOTS B5 & ROMET 5000 ROTARY METERS		TCIRMT-BD-B2A-FAFA-BA-AAOAEBA0A-0000-00		EA	1	No Bid			
G	42	HONEYWELL TC-INDEX, FOR RABO ROTARY METERS		TCIRAB-BD-B1A-FAFA-GA-AA0CACACA-0000-00		EA	1	No Bid			
G	43	HONEYWELL TURBO CORRECTOR		TCSCMB-AAAA-AKAB0-OOAOO-A6AAB7-AAAABO-AFAGA-BACOE-OOO-000-OOOOO-C2		EA	1	No Bid			
GAS	ITEM #	DESCRIPTION	SIZE	APPROVED PART #	ALTERNATE PART #	UNIT	EST QTY FY 26/27	BIDDER	UNIT PRICE	ESTIMATED DELIVERY TIME	
		METER BARS									
G	44	1" METER BARS 20LT AC-250 METERS	1" 20 LT	SEE DRAWING	N/A	EA	250	RICHARDS	$84.25	4-6 Weeks	81MR25075-TOP-NR
G	45	1.25 " METER BARS 30LT AL-425 METERS	1.25" 30LT	SEE DRAWING	N/A	EA	150	RICHARDS	$90.67	4-6 Weeks	81MR425-TOP-NR
G	50	METER BAR - METER BYPASS FOR AL-800 OR AL-1000 - 45 LT	45LT	SEE DRAWING	N/A	EA	4	RICHARDS	$683.49	4-6 Weeks	BYPASS-PREF-1.5-45LT
G	51	METER BAR - METER BYPASS FOR AC-630 - 45 LT	45LT	SEE DRAWING	N/A	EA	2	RICHARDS	$495.46	4-6 Weeks	SMYRNA-3-VALVE-45LT
G	52	METER BAR - METER BYPASS FOR AL-425 - 30 LT	30LT	SEE DRAWING	N/A	EA	2	RICHARDS	$639.60	4-6 Weeks	SMYRNA-3-VALVE
GAS	ITEM #	DESCRIPTION	SIZE	APPROVED PART #	ALTERNATE PART #	UNIT	EST QTY FY 26/27	BIDDER	UNIT PRICE	ESTIMATED DELIVERY TIME	
		METER MANIFOLDS									
G	54	METER BAR - TWO METER MANIFOLD;		SEE DRAWING	N/A	EA	1	RICHARDS	$281.26	4-6 Weeks	SMYRNA-2-GANG
G	55	METER BAR - THREE METER MANIFOLD;		SEE DRAWING	N/A	EA	1	RICHARDS	$328.12	4-6 Weeks	SMYRNA-3-GANG
G	56	METER BAR - FOUR METER MANIFOLD;		SEE DRAWING	N/A	EA	1	RICHARDS	$394.59	4-6 Weeks	SMYRNA-4-GANG
G	57	METER BAR - FIVE METER MANIFOLD;		SEE DRAWING	N/A	EA	1	RICHARDS	$482.10	4-6 Weeks	SMYRNA-5-GANG
G	58	METER BAR - SIX METER MANIFOLD;		SEE DRAWING	N/A	EA	1	RICHARDS	$578.51	4-6 Weeks	SMYRNA-6-GANG
GAS	ITEM #	DESCRIPTION	SIZE	APPROVED PART #	ALTERNATE PART #	UNIT	EST QTY FY 26/27	BIDDER	UNIT PRICE	ESTIMATED DELIVERY TIME	
		RESIDENTIAL REGULATORS									
G	63	REGULATOR; SENSUS/AMERCIAN	3/4" X 1"	1813C	143-80-2	EA	200	No Bid			
G	64	REGULATOR; SENSUS/AMERICAN	1" x 1"	1813C	143-80-2	EA	50	No Bid			
GAS	ITEM #	DESCRIPTION	SIZE	APPROVED PART #	ALTERNATE PART #	UNIT	EST QTY FY 26/27	BIDDER	UNIT PRICE	ESTIMATED DELIVERY TIME	
		COMMERCIAL REGULATORS									
G	68	REGULATOR; FISHER	2"	299H		EA	5	No Bid			
G	69	REGULATOR; FISHER	2"	CS 400		EA	4	No Bid			
G	71	REGULATOR;FISHER HIGH CAP RELEIF 2.5"VENT	2"	CS820-IQ		EA	4	No Bid			

GAS METER BID LIST ~~2025-2026~~ 2026-2027

GAS	ITEM #	DESCRIPTION	SIZE	APPROVED PART #	ALTERNATE PART #	UNIT	EST QTY FY 26/27	BIDDER	UNIT PRICE	ESTIMATED DELIVERY TIME	
		FARM TAP REGULATORS/RELIEFS									
G	75	REGULATOR, FARM TAP; FISHER/BELGAS	3/4"	627R-101	R627060200020l0	EA	1	No Bid			
G	76	REGULATOR; RELIEF; FISHER/BELGAS	1"	289H-49	P28908050000000	EA	1	No Bid			
GAS	ITEM #	DESCRIPTION	SIZE	APPROVED PART #	ALTERNATE PART #	UNIT	EST QTY FY 26/27	BIDDER	UNIT PRICE	ESTIMATED DELIVERY TIME	
		ITRON MODULES									
G	81	ITRON MODULE FOR TOP MOUNT METERS		ERG-5006-007/008		EA	20	No Bid			
G	82	ITRON MODULE FOR AC 250-630 ,AL 425		ERG-5006-001		EA	250	No Bid			
G	83	ITRON MODULE SENSUS 275		ERG-5006-002		EA	250	No Bid			
G	84	ITRON MODULE SENSUS 415		ERG-5006-004		EA	150	No Bid			
G	85	ITRON MODULE FOR REMOTE MOUNT METERS W/ TCI		ERG-5006-502/503/505		EA	20	No Bid			

LEGAL NOTICE

INVITATION TO SUBMIT QUOTATIONS

The Town of Smyrna will accept quotations on the annual Gas, Water and Sewer materials for the Utilities Department. Bidders shall submit sealed quotations in the format specified in the Invitation to Submit Quotations no later than **2:00 p.m. May 19, 2026** at which time the bids will be publicly opened and read aloud. No bid may be withdrawn after the scheduled closing time for a period of 90 days. Bidding documents may be obtained at Smyrna Town Hall during regular business hours or www.townofsmyrna.org. Quotations should be mailed or hand delivered to:

Purchasing Department
Smyrna Town Hall
Sealed Bid on Annual Gas, Water & Sewer Materials
May 19 @ 2:00 p.m.
315 South Lowry Street
Smyrna, TN 37167

The Town of Smyrna will not discriminate in the purchase of all goods and services on the basis of race, color, religion, sex, national origin, age, disability or any other lawfully protected classification.

Verbal quotations, faxed quotations or quotations received after the closing date will not be accepted. The Town of Smyrna reserves the right to reject any and all bids, to waive technicalities or informalities and to accept any bid deemed to be in the best interest of the Town.

BY: Sierra Lowry
Finance Director

TO BE RUN: May 5, 2026

Southern Pipe & Supply
COMPANY NAME

IN WITNESS WHEREOF, the undersigned have executed this Agreement as of the date set forth above.

TOWN OF SMYRNA, TENNESSEE

By: _____
Name: Mary Esther Reed
Title: Mayor

ATTEST:

_____
Amber Hobbs, Town Clerk

BIDDER:

By: Shanden Martin / Southern Pipe & Supply
Title: _____

ATTEST:

_____

AGREEMENT

This Agreement is made and entered into as of this 4 day of May, 2016, by and between Southern Pipe, a Town of Smyrna (the "Bidder") and the Town of Smyrna, Tennessee, a Tennessee municipal corporation (the "Town") for the purpose of Water & Sewer Bid.

WHEREAS, the Bidder has submitted a quotation for the provision of certain products and/or services to the Town, all in accordance with the terms of the Invitation to Submit Quotations attached hereto and incorporated herein by reference as if set forth at length verbatim as Exhibit A (the "ISQ"), and which Proposal from the Bidder is attached hereto and incorporated herein by reference as if set forth at length verbatim as Exhibit B (the "Quotation"); the ISQ and the Quotation, together with any and all ancillary documents thereto, shall be collectively referred to herein as the "Bid Documents"; and

WHEREAS, the Town now desires to accept the Bidder's quotation, in accordance with the terms set forth in such Bid Documents.

NOW, THEREFORE, in consideration of the mutual covenants contained herein, and for other good and valuable consideration, the receipt and sufficiency of which is hereby acknowledged, the undersigned do hereby agree as follows:

1. Acceptance of Bid Documents. The terms of the Bid Documents, as incorporated herein by reference, are hereby accepted by the parties hereto. The Bidder hereby agrees to provide the goods and/or services contemplated by such Bid Documents in accordance with the terms set forth therein. The Town hereby accepts the Bidder's quotation to provide the goods and/or services contemplated by such Bid Documents in accordance with the terms set forth therein.

2. Entire Agreement. This Agreement, including the exhibits and any other documents referred to herein or therein, which form a part hereof, contains the entire understanding of the parties with respect to its subject matter. There are no restrictions, agreements, promises, warranties, covenants or undertakings other than those expressly set forth herein or therein. This Agreement supersedes all prior written or oral agreements and understandings between the parties with respect to its subject matter and may not be altered, modified or amended, in whole or in part, except by the express written authorization and consent of the parties hereto.

SECTION III - SPECIFICATIONS COMPLIANCE

Unless otherwise noted, all quotations for the annual gas, water and sewer materials shall be in complete accordance with the specifications detailed herein.

Bidders shall note in the space provided below any exceptions or deviations in any way from the specifications of any section of this ISQ. Bidders should provide complete detail of exceptions or deviations.

Proposal Exceptions

Section	Brief Description
Water Line #73	T444-443 - AWT-Q-NL is not a part. Alternate Part is listed

By signature below, vendor acknowledges any quotation to be in full compliance with all aspects of each section of the ISQ not noted above. The undersigned hereby declares that no person or party other than the undersigned has any interest whatever in this proposal, that it is without any connection or collusion with any person or persons making or having made any proposal for the same work and without any previous understanding with such person or persons as to relative prices, obviating competition, and that it is made in good faith.

Southern Pipe & Supply
COMPANY

205-529-7616
TELEPHONE NUMBER

Shanden Martin
REPRESENTATIVE NAME

Outside Sales
REPRESENTATIVE TITLE

SIGNATURE

shanden.martin@southernpipe.com
E-MAIL ADDRESS

WATER	ITEM #	DESCRIPTION	SIZE	APPROVED PART #	Alternate Part Number:	UNIT	EST. QTY. FY 26/27	BIDDER	UNIT PRICE	ESTIMATED DELIVERY TIME
		METER YOKES/ACCESSORIES								
W	1	METER RISER/ RELOCATOR W/ 360° LOCKWING & DC MUELLER (FORD ALTERNATE)	5/8" X 3/4"	203B2446-R5--N	Retro 2CVBRHH-NL	EA	10	**Southern Pipe**	$209.49	20 Weeks
W	2	METER RISER/ RELOCATOR W/ 360° LOCKWING & DC MUELLER (FORD ALTERNATE)	5/8" X 3/4" X 7"	234B24118R5--N	VBHH42-7WR-NL	EA	200	**Southern Pipe**	$198.00	20 Weeks
W	3	METER RISER/ RELOCATOR W/ 360° LOCKWING & DC MUELLER (FORD ALTERNATE)	5/8" X 3/4" X 12"	238B24118R5--N	VBHH42-12-NL	EA	10	**Southern Pipe**	$204.09	20 Weeks
W	4	METER RISER/RELOCATOR W/ 360° LOCKWING & DC MUELLER (FORD ALTERNATE)	1" X 10"	389B24118R5--N	VBHH44-10-NL	EA	80	**Southern Pipe**	$328.98	20 Weeks
W	5	METER RISER/ RELOCATOR W/ 360° LOCKWING & DC MUELLER (FORD ALTERNATE)	1.5" X 14"	063B2424--5N	VBRHH46-14-NL	EA	5	**Southern Pipe**	$1,536.00	20 Weeks
W	6	METER RISER/ RELOCATOR W/ 360° LOCKWING & DC MUELLER (FORD ALTERNATE)	2" X 14"	087B2424--5N	VBRHH47-14-NL	EA	10	**Southern Pipe**	$1,603.00	20 Weeks
W	7	METER RISER/ RELOCATOR W/360° LOCKWING & DC FORD W/BYPASS	2" X 14"	1-VBHH47-14B-NL		EA	2	**Southern Pipe**	$1,689.00	20 Weeks
W	9	METER SWIVEL 2"SL FORD	5/8" X 3/4" X 3/4" x 2.5" LONG	C38-23-2.5-NL		EA	200	**Southern Pipe**	$12.41	20 Weeks
W	10	METER SWIVEL COUPLING FORD	5/8" x 3/4" x 3/4" x 2.25" LONG	C38-23-2.25-NL		EA	5	**Southern Pipe**	$12.41	20 Weeks
W	11	METER SWIVEL COUPLING STRAIGHT FORD	1"	C38-44-2-625-NL		EA	80	**Southern Pipe**	$19.10	20 Weeks
W	12	FLANGE PAK FOR METER BRASS (BOX W/2)	1.5"	4415FSC		EA	8	**Southern Pipe**	$99.04	20 Weeks
W	13	FLANGE PAK FOR METER BRASS (BOX W/ 2)	2"	4420FSC		EA	10	**Southern Pipe**	$103.50	20 Weeks
W	14	A 24 METER ADAPTOR FORD	5/8" x 3/4" to 1"	A24-NL		EA	120	**Southern Pipe**	$31.38	20 Weeks
W	15	A 47 FLANGED METER ADAPTOR FORD (BOX W/ 2)	1" TO 2"	A47-NL		EA	5	**Southern Pipe**	$188.77	20 Weeks
W	16	A 67 FLANGED METER ADAPTOR FORD (BOX W/2)	1.5" TO 2"	A67-NL		EA	5	**Southern Pipe**	$271.61	20 Weeks

WATER	ITEM #	DESCRIPTION	SIZE	APPROVED PART #	Alternate Part Number:	UNIT	EST. QTY. FY 26/27	BIDDER	UNIT PRICE	ESTIMATED DELIVERY TIME
		WATER REGULATORS								
W	17	REGULATOR, WATTS	3/4"	LF25AUB-Z3		EA	4			
W	18	REGULATOR, WATTS	1"	1LF25AUB-Z3		EA	4			
W	19	REGULATOR, ZURN WILKINS	3/4"	MODEL 70XL		EA	2			

WATER	ITEM #	DESCRIPTION	SIZE	APPROVED PART #	Alternate Part Number:	UNIT	EST. QTY. FY 26/27	BIDDER	UNIT PRICE	ESTIMATED DELIVERY TIME
		WATER MOUDLE								
W	21	ITRON UNIVERSAL MODULE W/ LID MOUNTING KIT	UNIVERSAL	ERW-1350-001 100W+/CFG-1601-001		EA	275			
W	22	ITRON UNIVERSAL LEAK SENSOR	UNIVERSAL	LDS-1601-001		EA	10			
W	23	CELLULAR 100W MODULE W/ LID MOUNTING KIT	UNIVERSAL	ECW-1700-001/CFG-1601-001		EA	100			

WATER	ITEM #	DESCRIPTION	SIZE	APPROVED PART #	Alternate Part Number:	UNIT	EST. QTY. FY 26/27	BIDDER	UNIT PRICE	ESTIMATED DELIVERY TIME
		METERS AND PARTS								
W	24	METER CIB/HRE/USG W/ ITRON CONNECTOR; BADGER	5/8" X 3/4"	MODEL 25LL (NSF 61 G MTR)		EA	200			
W	25	METER CIB/HRE/USG W/ ITRON CONNECTOR; BADGER	1"	MODEL 70 LL (NSF 61 G MTR)		EA	80			
W	26	METER CIB/HRE/USG W/ ITRON CONNECTOR; BADGER	1.5	MODEL 120 LL (NSF 61 G MTR)		EA	4			
W	27	METER ELLIPTICAL W/T PLUG HRE/USG W/ ITRON CONNECTOR W/ D P.; BADGER	2"	MODEL 170 LL (NSF 61 G MTR)		EA	6			
W	28	METER BOTTOMS FOR BADGER METER; BADGER	5/8" X 3/4"	57799--001		EA	25			
W	29	METER BOTTOMS FOR BADGER METER	1"	59293--002		EA	10			
W	37	CHAMBER for M70 BADGER METER	1"	33334-032		EA	5			
W	38	CHAMBER for M120 BADGER METER	1.5"	33334-017		EA	5			
W	39	CHAMBER for M170 BADGER METER	2"	33334-028		EA	5			
W	40	RETROFIT REGISTER w/ ITRON CONNECTOR; BADGER	5/8" X 3/4"	M25/RETRO/RT		EA	400			
W	41	RETROFIT REGISTER w/ ITRON CONNECTOR; BADGER	1"	M70/RETRO/RT		EA	6			
W	42	RETROFIT REGISTER w/ ITRON CONNECTOR; BADGER	1.5"	M120/RETRO/RT		EA	2			
W	43	RETROFIT REGISTER w/ ITRON CONNECTOR; BADGER	2"	M170/RETRO/RT		EA	4			

WATER	ITEM #	DESCRIPTION	SIZE	APPROVED PART #	Alternate Part Number:	UNIT	EST. QTY. FY 26/27	BIDDER	UNIT PRICE	ESTIMATED DELIVERY TIME
		ULTRASONIC METERS AND PARTS								
W	44	NEPTUNE METER W/ 7' ITRON CONNECTOR in 100 USG	2" x 17"	EU2E1G1SG61		EA	4			
W	45	NEPTUNE METER W/ 25' ITRON CONNECTOR in 100 USG W/ FLANGE PAKS	3"X 12"	EU3A1G1SG61		EA	2			
W	46	NEPTUNE METER W/ 25' ITRON CONNECTOR in 100 USG W/ FLANGE PAKS	4" X 14"	EU3C1G1SG61		EA	2			
W	47	NEPTUNE METER W/ 25' ITRON CONNECTOR in 100 USG W/ FLANGE PAKS	6" X 18"	EU3E1G1SG61		EA	3			

WATER	ITEM #	DESCRIPTION	SIZE	APPROVED PART #	Alternate Part Number:	UNIT	EST. QTY. FY 26/27	BIDDER	UNIT PRICE	ESTIMATED DELIVERY TIME
		METER BOXES AND LIDS								
W	48	SIGMA RMB 1324TB SW W/ LC1324T-D READ DOOR AND RECESS TOUCH READ HOLE	5/8" x 3/4" meters	RMB-132418-SW		EA	50	**Southern Pipe**	$165.94	2 weeks
W	49	SIGMA RMB 173018 SW W/ LC1730T-D READ DOOR AND RECESS TOUCH READ HOLE	1" - 2" meters	RMB-173018-SW		EA	25	**Southern Pipe**	$257.13	2 weeks
W	50	SIGMA LID ONLY LC 1324T-D READ DOOR AND RECESS TOUCH READ HOLE	5/8" x 3/4" meters	RMB-1324-L-RT		EA	10	**Southern Pipe**	$74.97	2 weeks
W	51	SIGMA LID ONLY LC1730T-D READ DOOR AND RECESS TOUCH READ HOLE	1" - 2" meters	RMB-1730-L-RT		EA	10	**Southern Pipe**	$127.98	2 weeks
W	55	CI SOLID METER BOX LID W/ ITRON IR HOLE FOR BROOKS 36H15 METER BOX LID ONLY	CI SOLID LID FOR BROOKS 36HIS	LC 223I ITRON		EA	25	**Southern Pipe**	$27.80	2 weeks
		* 1324 AND 1730 BOXES SHALL COME W/LID READER DOOR AND RECESS TOUCH READ HOLE		LC1324T-D/1730T-D						

WATER	ITEM #	DESCRIPTION	SIZE	APPROVED PART #	Alternate Part Number:	UNIT	EST. QTY. FY 26/27	BIDDER	UNIT PRICE	ESTIMATED DELIVERY TIME
		VAULTS								
W	56	METER VAULT W/ ALUMINUM LID	2" METER VAULT	SEE DRAWING			2			

WATER	ITEM #	DESCRIPTION	SIZE	APPROVED PART #	Alternate Part Number:	UNIT	EST. QTY. FY 26/27	BIDDER	UNIT PRICE	ESTIMATED DELIVERY TIME
		BRASS FITTINGS								
W	59	BRASS REDUCTION COUPLING	2" X 1.5"	B-RC0807		EA	2			
W	60	ROUGH BRASS 45° COUPLING	1.5"	BR4L		EA	2			
W	61	ROUGH BRASS 90° COUPLING	1.5"	BR9L		EA	2			
W	64	FEMALL THREAD BALL VALVE; FORD	3/4"	B11-233W-NL		EA	10			
W	65	BRASS TEE	2"x2"x2"	NSF61-4		EA	10			

W	66	BRASS THREADED 90° MATCO	2"	NSF61-4		EA	10			
W	67	BRASS THREADED STREET 90° MATCO	2"	NSF61-4		EA	10			
W	68	THREADED COUPLING, MATCO	2"	NSF61-4		EA	10			
W	69	BRASS ALL THREAD	1.5"			EA	2			
W	70	BRASS NIPPLE	1.5" X 6"	BRNLU		EA	2			
W	71	BRASS ALL THREAD, MATCO NORCA	2"	NBR08CL		EA	20			
W	72	BRASS NIPPLE, MATCO NORCA	2" X 6" LONG	NBR086		EA	10			
W	73	BRASS NIPPLE, B&K	2" X 12" LONG	7 77701049941		EA	10			
W	74	BRASS NIPPLE	2" X 18" LONG			EA	6			
W	75	BRASS NIPPLE	2" X 24" LONG			EA	6			
W	76	CHECK VALVE, RED & WHITE	1.5"	236AB 1 1/2		EA	4			
W	77	CHECK VALVE, RED & WHITE	2"	236AB 2		EA	4			
W	78	APOLLO BALL VALVE	2"	A94ALF10801A		EA	6			

WATER	ITEM #	DESCRIPTION	SIZE	APPROVED PART #	Alternate Part Number:	UNIT	EST. QTY. FY 26/27	BIDDER	UNIT PRICE	ESTIMATED DELIVERY TIME
		COMPRESSION FITTINGS								
W	82	COUPLING, FMIP, FORD	FMLIP 3/4" X 3/4" CTS	C14-33-Q-NL		EA	5	**Southern Pipe**	$20.28	4 weeks
W	83	COUPLING, FORD	3/4" CTS X 3/4" CTS	C44-33-Q-NL		EA	30	**Southern Pipe**	$23.48	4 weeks
W	84	COUPLING, FORD	3/4" CTS PAK X 3/4" IP MALE	C84-33-Q-NL		EA	5	**Southern Pipe**	$19.27	4 weeks
W	85	COUPLING, FORD	3/4" CTS PACK X 1" CTS PACK	C44-34-Q-NL		EA	30	**Southern Pipe**	$27.28	4 weeks
W	86	COUPLING, FMLIP, FORD	FMLIP 1" X 1" CTS	C14-44-Q-NL		EA	15	**Southern Pipe**	$27.00	4 weeks
W	87	COUPLING, FORD	1" CTS X 1" CTS	C44-44-Q-NL		EA	25	**Southern Pipe**	$46.50	4 weeks
W	88	COUPLING, FORD	1" CTS X 1" I.P. MALE	C84-44-Q-NL		EA	6	**Southern Pipe**	$28.07	4 weeks
W	89	COUPLING, FORD	2" CTS X 2" CTS JOINT PK	C44-77-Q-NL		EA	6	**Southern Pipe**	$115.00	4 weeks
W	90	2" CTS X 2" IRON PIPE THREAD, FORD	2" CTS X 2" IRON PIPE THREAD	C84-77-Q-NL		EA	6	**Southern Pipe**	$90.10	4 weeks
W	91	COUPLING, T'S, FORD	3/4" X 3/4" X 3/4" CTS	T444-333-Q-NL		EA	20	**Southern Pipe**	$56.35	4 weeks
W	92	COUPLING, T'S, FORD	3/4" X 3/4" X 1" CTS	T444-443-Q-NL	T444-334-Q-NL	EA	10	**Southern Pipe**	$60.69	4 weeks
W	93	COUPLING, T'S, FORD	1" X 1" X 3/4"	T444-443-AWT-Q-NL	T444-443-U-AWT-NL	EA	5	**Southern Pipe**	$123.00	4 weeks
W	94	COUPLING, T'S, FORD	1" X 1" X 1" CTS PAK JOINT	T444-444-Q-NL		EA	5	**Southern Pipe**	$60.30	4 weeks
W	95	BALL VALVE, FORD	3/4"	B44-233W-Q-NL		EA	20	**Southern Pipe**	$55.43	4 weeks
W	96	BALL VALVE, FORD	1"	B44-344W-Q-NL		EA	20	**Southern Pipe**	$110.74	4 weeks
W	97	COUPLING, "Y", FORD	3/4" X 3/4" X 1" CTS	Y44-243-Q-NL		EA	25	**Southern Pipe**	$48.39	4 weeks
W	98	90° COUPLING, FORD	3/4"	L44-33-Q-NL		EA	5	**Southern Pipe**	$30.08	4 weeks
W	99	90° COUPLING, FORD	1"	L44-44-Q-NL		EA	5	**Southern Pipe**	$38.58	4 weeks
W	100	Q-NUT ASSEMBLY	3/4"	QJN4-3		EA	20	**Southern Pipe**	$9.34	4 weeks
W	101	Q-NUT ASSEMBLY	1"	QJN4-4		EA	20	**Southern Pipe**	$11.38	4 weeks
W	102	FEMALE COPPER THREAD GRIP JOINT, FORD	3/4" X 3/4" CTS	C04-33-Q-NL		EA	5	**Southern Pipe**	$21.87	4 weeks
W	103	FEMALE COPPER THREAD GRIP JOINT, FORD	1" X 1" CTS	C04-44-Q-NL		EA	5	**Southern Pipe**	$31.96	4 weeks
W	104	PAK J ASSEMBLY, FORD	1" FEMALE X 3/4" CTS	C08-43-NL		EA	5	**Southern Pipe**	$19.93	4 weeks
W	105	COUPLING SWIVEL 45 DEGREE, FORD	3/4"X3/4"	LA04-33S-Q-NL		EA	5	**Southern Pipe**	$34.51	4 weeks
W	106	COUPLING SWIVEL 45 DEGREE, FORD	1"X1"	LAO4-44S-Q-NL		EA	5	**Southern Pipe**	$48.98	4 weeks
W	107	COUPLING SWIVEL 90 DEGREE, FORD	3/4"X3/4"	L04-33S-Q-NL		EA	5	**Southern Pipe**	$38.55	4 weeks
W	108	COUPLING SWIVEL 90 DEGREE, FORD	1"X1"	L04-44S-Q-NL		EA	5	**Southern Pipe**	$52.58	4 weeks
W	109	MULTI SERVICE Y NL 1-2" FMLIP X 4-1" FMLIP	2"X1"	Y11-474-NL		EA	5	**Southern Pipe**	$94.48	4 weeks

WATER	ITEM #	DESCRIPTION	SIZE	APPROVED PART #	Alternate Part Number:	UNIT	EST. QTY. FY 26/27	BIDDER	UNIT PRICE	ESTIMATED DELIVERY TIME
		CURB STOPS								
W	113	CURB STOP W/360 DEGREE LOCKING WINGNUT, FORD	3/4"	B43-232WR-Q-NL		EA	200	**Southern Pipe**	$58.37	4 weeks
W	114	CURB STOP W/360 DEGREE LOCKING WINGNUT, FORD	1"	B43-344WR-Q-NL		EA	25	**Southern Pipe**	$106.29	4 weeks
W	115	BALL VALVE PAD WING/CURB STOP, FORD	1.5"	BF13-666W-NL		EA	4	**Southern Pipe**	$219.60	4 weeks
W	116	BALL VALVE PAD WING/CURB STOP, FORD	2"	BF13-777W-NL		EA	4	**Southern Pipe**	$349.99	4 weeks
W	117	BALL VALVE PAD WING W/COMPRESSION FITTING, FORD	2"	BF43-777W-Q-NL		EA	6	**Southern Pipe**	$393.82	4 weeks

WATER	ITEM #	DESCRIPTION	SIZE	APPROVED PART #	Alternate Part Number:	UNIT	EST. QTY. FY 26/27	BIDDER	UNIT PRICE	ESTIMATED DELIVERY TIME
		CORP STOPS								
W	122	CORPORATION STOP, FORD	3/4" TAPER X 3/4" CTS	FB1000-3-Q-NL		EA	10	**Southern Pipe**	$60.88	2 weeks
W	123	CORPORATION STOP, FORD	1" CC TAPER x 1"CTS	FB1000-4-Q-NL		EA	20	**Southern Pipe**	$80.50	2 weeks
W	124	CORPORATION STOP, IRON PIPE THREADS, FORD	1" IP THREAD X1" CTS	FB1100-4-Q-NL		EA	5	**Southern Pipe**	$80.58	4 weeks

WATER	ITEM #	DESCRIPTION	SIZE	APPROVED PART #	Alternate Part Number:	UNIT	EST. QTY. FY 26/27	BIDDER	UNIT PRICE	ESTIMATED DELIVERY TIME
		TAPPING SADDLES								
W	143	TAPPING SADDLE, SMITH BLAIR	2" X 3/4" (2.35-2.56)	315-00025607-000		EA	5			
W	144	TAPPING SADDLE, SMITH BLAIR	2" X 1" (2.35-2.56)	315-00025609-000		EA	4			
W	145	TAPPING SADDLE, SMITH BLAIR	2-1/4" X 3/4" (2.44-2.91)	315-00029107-000		EA	5			
W	146	TAPPING SADDLE, SMITH BLAIR	2-1/4" X 1" (2.44-2.91)	315-00029109-000		EA	5			
W	149	TAPPING SADDLE, SMITH BLAIR	4" X 3/4" (4.40-4.80)	315-00048007-000		EA	4			
W	151	TAPPING SADDLE, SMITH BLAIR	4" X 1" (4.40-4.80)	315-00048009-000		EA	4			
W	155	TAPPING SADDLE, SMITH BLAIR	4" X 2" (4.40-4.80)	315-00048014-000		EA	4			
W	158	TAPPING SADDLE, SMITH BLAIR	6" X 3/4" (6.84-7.60)	315-00076007-000		EA	5			
W	160	TAPPING SADDLE, SMITH BLAIR	6" X 1" (5.94-6.90)	315-00069009-000		EA	5			
W	161	TAPPING SADDLE, SMITH BLAIR	6" X 1" (6.84-7.60)	315-00076009-000		EA	5			
W	163	TAPPING SADDLE, SMITH BLAIR	6" X 2" (5.94-6.90)	315-00069014-000		EA	5			
W	165	TAPPING SADDLE, SMITH BLAIR	6"x2" (6.84-7.60)	315-00076014-000		EA	5			
W	166	TAPPING SADDLE, SMITH BLAIR	8" X 3/4" (8.54-10.10)	315-00101007-000		EA	5			
W	167	TAPPING SADDLE, SMITH BLAIR	8" X 1" (8.54-10.10)	315-00101009-000		EA	4			
W	171	TAPPING SADDLE, SMITH BLAIR	8" X 2" (8.54-10.10)	315-00101014-000		EA	2			
W	175	TAPPING SADDLE, SMITH BLAIR	10" X 2" (10.64-12.12)	315-00121214-00		EA	4			
W	176	TAPPING SADDLE, SMITH BLAIR	12" X 3/4" (12.64-14.32)	315-00143207-000		EA	2			
W	178	TAPPING SADDLE, SMITH BLAIR	12" X 1" (12.62-14.32)	315-00143209-000		EA	2			
W	180	TAPPING SADDLE, SMITH BLAIR	12"-14"X 2" (12.62-14.32)	315-00143214-000		EA	2			
W	181	TAPPING SADDLE, SMITH BLAIR	16"- X 2" (17.25-17.80)	317-00178014-000		EA	2			
W	182	TAPPING SADDLE, SMITH BLAIR	16"- X 2" (17.25-17.80)	317-00195014-000		EA	2			

W	183	TAPPING SADDLE: SMITH BLAIR	20"X2" (21.55-21.65)	317-00216014-000		EA	2			
W	184	TAPPING SADDLE: SMITH BLAIR	24" X 2" (25.75-25.85)	317-00258014-000		EA	2			
WATER	ITEM #	DESCRIPTION	SIZE	APPROVED PART #	Alternate Part Number:	UNIT	EST. QTY. FY 26/27	BIDDER	UNIT PRICE	ESTIMATED DELIVERY TIME
		REPAIR CLAMPS								
W	188	REPAIR CLAMP: SMITH BLAIR	3/4" X 6" FL CIR		FORD FSC-105-6R	EA	2	**Southern Pipe**	$29.40	3 weeks
W	189	REPAIR CLAMP: SMITH BLAIR	1" X 6" FL CIR (PVC)	244-00013206-000	FORD FSC-132-6R	EA	2	**Southern Pipe**	$29.40	3 weeks
W	190	REPAIR CLAMP: SMITH BLAIR	1-1/4" X 6"	244-00016609-000	FORD FSC-166-6R	EA	4	**Southern Pipe**	$30.29	3 weeks
W	191	REPAIR CLAMP: SMITH BLAIR	1.5" X 6" FL CIR (PVC)	244-00019006-000	FORD FSC-190-6R	EA	4	**Southern Pipe**	$29.67	3 weeks
W	192	REPAIR CLAMP: SMITH BLAIR	2" X 7" FL CIR (2.35-2.63)	226-00023807-000	FORD F1-263-75	EA	8	**Southern Pipe**	$61.24	3 weeks
W	193	REPAIR CLAMP: SMITH BLAIR	2.5" X 7" FL CIR (2.70-3.00)	226-00027507-000	FORD F1-300-75	EA	6	**Southern Pipe**	$59.27	3 weeks
W	194	REPAIR CLAMP: SMITH BLAIR	2" X 12.5" FL CIR (2.35-2.63)	226-00023812-000	FORD F1-263-125	EA	2	**Southern Pipe**	$91.10	3 weeks
W	195	REPAIR CLAMP: SMITH BLAIR	2.5" X 12" FL CIR (2.70-3.00)	226-00027512-000	FORD F1-300-125	EA	2	**Southern Pipe**	$91.85	3 weeks
W	196	REPAIR CLAMP: SMITH BLAIR	2" X 15" (2.35-2.63)	226-00023815-000	FORD F1-263-15	EA	2	**Southern Pipe**	$106.82	3 weeks
W	197	REPAIR CLAMP: SMITH BLAIR	2" X 25" (2.35-2.63)	226-00023825-000	FORD F1-263-25	EA	2	**Southern Pipe**	$180.98	3 weeks
W	198	REPAIR CLAMP: SMITH BLAIR	2.25" X 25" (2.70-3.00)	226-00027525-000	FORD F1-300-25	EA	2	**Southern Pipe**	$187.99	3 weeks
W	199	REPAIR CLAMP: SMITH BLAIR	3" X 7.5" FL CIR (3.73-4.00)	226-00037507-000	FORD F1-400-75	EA	2	**Southern Pipe**	$67.10	3 weeks
W	200	REPAIR CLAMP: SMITH BLAIR	3" X 12" FL CIR (3.46-3.70)	226-00035012-000	FORD F1-370-125	EA	2	**Southern Pipe**	$104.11	3 weeks
W	201	REPAIR CLAMP: SMITH BLAIR	4" X 7.5" FL CIR (3.96-4.25)	226-00040007-000	FORD F1-425-75	EA	2	**Southern Pipe**	$63.52	3 weeks
W	202	REPAIR CLAMP: SMITH BLAIR	4" X 7.5" FL CIR (4.45-4.73)	226-00045007-000	FORD F1-473-75	EA	2	**Southern Pipe**	$63.50	3 weeks
W	203	REPAIR CLAMP: SMITH BLAIR	4" X 7.5" FL CIR (4.74-5.14)	226-00048007-000	FORD F1-514-75	EA	6	**Southern Pipe**	$70.78	3 weeks
W	204	REPAIR CLAMP: SMITH BLAIR	4 X 12.5" FL CIR (4.74-5.14)	226-00048012-000	FORD F1-514-125	EA	2	**Southern Pipe**	$101.94	3 weeks
W	205	REPAIR CLAMP: SMITH BLAIR	4 X 15" FL CIR (PVC) (4.74-5.14)	226-00048015-000	FORD F1-514-15	EA	2	**Southern Pipe**	$117.03	3 weeks
W	207	REPAIR CLAMP: SMITH BLAIR	6" X 7" FL CIR (6.84-7.24)	226-00069007-000	FORD F1-724-75	EA	10	**Southern Pipe**	$70.38	3 weeks
W	208	REPAIR CLAMP: SMITH BLAIR	6" X 7.5" FL CIR (6.56-6.96)	226-00066307-000	FORD F1-696-75	EA	4	**Southern Pipe**	$70.84	3 weeks
W	210	REPAIR CLAMP: SMITH BLAIR	6" X 12" FL CIR (6.56-6.96)	226-00066312-000	FORD F1-696-125	EA	2	**Southern Pipe**	$110.41	3 weeks
W	211	REPAIR CLAMP: SMITH BLAIR	6" X 12" FL CIR (6.84-7.24)	226-00069012-000	FORD F1-724-125	EA	4	**Southern Pipe**	$122.66	3 weeks
W	212	REPAIR CLAMP: SMITH BLAIR	6" X 12.5" (7.05-7.45)	226-00071012-000	FORD F1-745-125	EA	2	**Southern Pipe**	$122.66	3 weeks
W	213	REPAIR CLAMP: SMITH BLAIR	6" X 15" FL CIR (6.56-6.96)	226-00066315-000	FORD F1-696-15	EA	2	**Southern Pipe**	$159.85	3 weeks
W	214	REPAIR CLAMP: SMITH BLAIR	6" X 15" (6.84-7.24)	226-00069015-000	FORD F1-724-15	EA	2	**Southern Pipe**	$143.12	3 weeks
W	215	REPAIR CLAMP: SMITH BLAIR	6" X 15" (7.05-7.45)	226-00071015-000	FORD F1-745-15	EA	2	**Southern Pipe**	$143.12	3 weeks
W	217	REPAIR CLAMP: SMITH BLAIR	8" X 7" FL CIR (8.54-8.94)	226-00086307-000	FORD F1-894-75	EA	4	**Southern Pipe**	$84.93	3 weeks
W	218	REPAIR CLAMP: SMITH BLAIR	8" X 7" FL CIR (8.99-9.39)	226-00090507-000	FORD F1-939-75	EA	8	**Southern Pipe**	$84.93	3 weeks
W	219	REPAIR CLAMP: SMITH BLAIR	8" X 12" FL CIR (8.99-9.39, DIP)	226-00090512-000	FORD F1-939-125	EA	2	**Southern Pipe**	$122.92	3 weeks
W	220	REPAIR CLAMP: SMITH BLAIR	8" X 15" (8.54-8.94)	226-00086315-000	FORD F1-894-15	EA	2	**Southern Pipe**	$150.48	3 weeks
W	221	REPAIR CLAMP: SMITH BLAIR	8" X 15" (8.99-9.39)	226-00090515-000	FORD F1-939-15	EA	2	**Southern Pipe**	$150.48	3 weeks
W	222	REPAIR CLAMP: SMITH BLAIR	10" X 15" FL CIR (DIP) (11.04-11.44)	226-00111015-000	FORD F1-1144-15	EA	2	**Southern Pipe**	$175.52	3 weeks
W	223	REPAIR CLAMP: SMITH BLAIR	10" X 20" (11.04-11.44)	226-00114020-000	FORD F1-1144-20	EA	2	**Southern Pipe**	$281.49	3 weeks
W	224	REPAIR CLAMP: SMITH BLAIR	12" X 7" FL CIR (13.10-13.50)	226-00132007-000	FORD F1-1350-75	EA	2	**Southern Pipe**	$111.44	3 weeks
W	225	REPAIR CLAMP: SMITH BLAIR	12" X 12" FL CIR (DIP) (13.10-13.50)	226-00132012-000	FORD F1-1350-125	EA	2	**Southern Pipe**	$166.35	3 weeks
W	226	REPAIR CLAMP: SMITH BLAIR	12" X 15" FL CIR (DIP) (13.10 - 13.50)	226-00132015-000	FORD F1-1350-15	EA	2	**Southern Pipe**	$194.49	3 weeks
W	227	REPAIR CLAMP: SMITH BLAIR	16" X 15" (17.15-17.90)	228-20171515-000	FORD F2-1790-15	EA	2	**Southern Pipe**	$311.89	3 weeks
W	229	REPAIR CLAMP: SMITH BLAIR	16" X 20" FL CIR (17.15-17.90)	228-20178220-000	FORD F2-1790-20	EA	2	**Southern Pipe**	$404.98	3 weeks
W	230	REPAIR CLAMP: SMITH BLAIR	16" X 30" (17.15-17.90)	228-20171530-000	FORD F2-1790-30	EA	2	**Southern Pipe**	$659.73	3 weeks
W	231	REPAIR CLAMP: SMITH BLAIR	18" X 20" FL CIR (19.23-19.98)	228-20192320-000	FORD F2-1998-20	EA	2	**Southern Pipe**	$462.98	3 weeks
W	232	REPAIR CLAMP: SMITH BLAIR	20" X 20" (21.52-22.27)	228-20215220-000	FORD F2-2227-20	EA	2	**Southern Pipe**	$470.94	3 weeks
W	233	REPAIR CLAMP: SMITH BLAIR	24" X 30" FL CIR (25.70-26.80)	228-30257030-000	FORD F3-2680-30	EA	2	**Southern Pipe**	$1,207.98	3 weeks
W	234	REPAIR CLAMP: SMITH BLAIR	24" X 20" FL CIR (25.70-26.80)	228-30257020-000	FORD F3-2680-20	EA	2	**Southern Pipe**	$799.89	3 weeks
W	237	REPAIR CLAMP: SMITH BLAIR W/1" CC TAP	6"X7.5" W/1" TAP (6.84-7.24)	238-00069007-009	FORD F1-724-75-CC4	EA	2	**Southern Pipe**	$92.92	3 weeks
W	238	REPAIR CLAMP: SMITH BLAIR W/1" CC TAP	8"X7.5" W/ 1" TAP (8.99-9.39)	238-00090507-009	FORD F1-939-75-CC4			**Southern Pipe**	$103.49	3 weeks
WATER	ITEM #	DESCRIPTION	SIZE	APPROVED PART #	Alternate Part Number:	UNIT	EST. QTY. FY 26/27	BIDDER	UNIT PRICE	ESTIMATED DELIVERY TIME
		HYMAX								
W	240	HYMAX: KRAUSZ	1.5" (1.61-2.13)	860-56-0041-16		EA	4	**Southern Pipe**	$156.38	12 weeks
W	241	HYMAX: KRAUSZ	2" (2.10-3.03)	860-56-0054-16		EA	4	**Southern Pipe**	$174.58	12 weeks
W	242	HYMAX: KRAUSZ	3" (3.46-4.33)	860-56-0088-16		EA	4	**Southern Pipe**	$230.30	12 weeks
W	243	HYMAX: KRAUSZ	4" (4.25-5.63)	860-56-0108-16C		EA	4	**Southern Pipe**	$302.21	12 weeks
W	244	HYMAX: KRAUSZ	6" (6.42-7.68)	860-56-0163-16		EA	10	**Southern Pipe**	$390.83	12 weeks
W	245	HYMAX: KRAUSZ	8" (8.54-9.84)	860-56-0217-16		EA	10	**Southern Pipe**	$436.00	12 weeks
W	246	HYMAX: KRAUSZ	10" (10.70 - 12.00)	860-56-0272-16		EA	2	**Southern Pipe**	$567.05	12 weeks
W	247	HYMAX: KRAUSZ	12" (12.40-13.66)	860-56-0315-16		EA	2	**2**	$677.98	12 weeks
WATER	ITEM #	DESCRIPTION	SIZE	APPROVED PART #	Alternate Part Number:	UNIT	EST. QTY. FY 26/27	BIDDER	UNIT PRICE	ESTIMATED DELIVERY TIME
		PIPE								
W	254	PEX PIPE: REHAU 300 ft. Roll	3/4"	261056-100		FT	2000			
W	255	PEX PIPE: REHAU 300 ft. roll	1"	261076-300		FT	4000			
W	256	PEX PIPE: REHAU 300 ft. roll	2"			FT	300			
W	258	CL-350 DUCTILE IRON WATER PIPE W/ BITUMINOUS SEAL COATING INSIDE & OUTSIDE	3"	CL-350		FT	60			
W	263	CL-350 DUCTILE IRON WATER PIPE W/ BITUMINOUS SEAL COATING INSIDE & OUTSIDE	12"	CL-350		FT	40			
W	264	CL-350 DUCTILE IRON WATER PIPE W/ BITUMINOUS SEAL COATING INSIDE & OUTSIDE	16"	CL-350		FT	40			
W	265	CL-350 DUCTILE IRON WATER PIPE W/ BITUMINOUS SEAL COATING INSIDE & OUTSIDE	18"	CL-350		FT	40			
W	266	CL-350 DUCTILE IRON WATER PIPE W/ BITUMINOUS SEAL COATING INSIDE & OUTSIDE	24"	CL-350		FT	40			
W	267	CL-350 DUCTILE IRON WATER PIPE W/ BITUMINOUS SEAL COATING INSIDE & OUTSIDE	36"	CL-350		FT	40			
W	268	C900 WATER PIPE SDR 14	4"	C-900		FT	100			
W	269	C900 WATER PIPE SDR 14	6"	C-900		FT	200			
W	270	C900 WATER PIPE SDR 14	8"	C-900		FT	200			
W	271	C900 WATER PIPE SDR 14	10"	C-900		FT	40			
W	273	SDR 11, 2" IPS BLACK WATER PIPE	2"	SDR-11		FT	100			
WATER	ITEM #	DESCRIPTION	SIZE	APPROVED PART #	Alternate Part Number:	UNIT	EST. QTY. FY 26/27	BIDDER	UNIT PRICE	ESTIMATED DELIVERY TIME
		PIPE FITTINGS								
W	277	PIPE STIFFENER (PLASTIC)	3/4"			EA	1000			
W	278	PIPE STIFFENER (PLASTIC)	1"			EA	2000			

W	279	PIPE INSERT, FORD # SS STAINLESS STEEL	2"			EA	14			
W	293	CAP, TYLER	2"			EA	2			
W	294	CAP, TYLER	3"			EA	2			
W	295	CAP, TYLER	4"			EA	2			
W	296	CAP, TYLER	4" X 2"			EA	2			
W	297	CAP, TYLER	6"			EA	2			
W	298	CAP, TYLER	6" X 2"			EA	2			
W	299	CAP, TYLER	8"			EA	2			
W	300	CAP, TYLER	8" X 2"			EA	2			
W	345	ANCHOR COUPLING, TYLER	6" X 13" LONG			EA	6			
W	346	ANCHOR COUPLING, TYLER	6" X 18" LONG			EA	6			
W	347	ANCHOR COUPLING, TYLER	6" X 24" LONG			EA	6			

WATER	ITEM #	DESCRIPTION	SIZE	APPROVED PART #	Alternate Part Number:	UNIT	EST. QTY. FY 26/27	BIDDER	UNIT PRICE	ESTIMATED DELIVERY TIME
		ACCESSORIES								
W	389	M.J. ACC KIT, OFCO	3"	912-096-5892		EA	4			
W	390	M.J. ACC KIT, SIGMA	4"	DGP 4"		EA	5			
W	391	M.J. BOLT PACK SET	6"	SIP 6"		EA	10			
W	392	M.J. BOLT PACK SET	8"	SIP 8"		EA	4			
W	393	M.J. ACC KIT, SIGMA	10"	DGP 10		EA	2			
W	394	M.J. ACC KIT	12"			EA	4			
W	395	M.J. ACC KIT	16"			EA	4			
W	397	TRANSITION GASKET	4"			EA	4			
W	398	TRANSITION GASKET	6"			EA	8			
W	399	TRANSITION GASKET	8"			EA	6			
W	400	MEGALUG D.I., FORD	3"	UFR 1500-SA-3-I		EA	4			
W	401	MEGALUG AND ACC KIT (D.I), SIGMA	4"	829,805,219,567		EA	4			
W	402	MEGALUG AND ACC KIT (D.I), SIGMA	6"	UFR 1400-DA-6		EA	4			
W	403	MEGALUG AND ACC KIT (D.I), EBAA	8"	110 804 1903		EA	2			
W	404	MEGALUG AND ACC KIT (D.I), EBAA	10"	1,110,041,903		EA	2			
W	405	MEGALUG AND ACC KIT (D.I), FORD	12"	UFR 1400-DA-12-I		EA	2			
W	406	MEGALUG AND ACC KIT (D.I)	16"			EA	4			
W	407	MEGALUG AND ACC KIT (D.I)	24"			EA	2			
W	408	MEGALUG AND ACC KIT (D.I.)	36"			EA	2			
W	412	MEGALUG AND ACC KIT (C900), SIGMA	4"	829,805,219,864		EA	10			
W	413	MEGALUG AND ACC KIT (C900), SIGMA	6"	829 805 219 871		EA	40			
W	414	MEGALUG AND ACC KIT (C900), SIGMA	8"	829 805 219 888		EA	30			
W	415	C900 MEGALUG, EBAA	10"	2,010,161,903		EA	6			
W	416	C900 MEGALUG, SIGMA	12"	829 052 199 01		EA	6			
W	417	MEGALUG AND ACC KIT ((DI)	18"			EA	4			
W	418	MEGALUG AND ACC KIT (D.I)	20"			EA	4			

WATER	ITEM #	DESCRIPTION	SIZE	APPROVED PART #	Alternate Part Number:	UNIT	EST. QTY. FY 26/27	BIDDER	UNIT PRICE	ESTIMATED DELIVERY TIME
		VALVES								
W	423	GATE VALVE, THREADED, KENNEDY	2"	228D2X		EA	10	**Southern Pipe**	**464.84**	2 weeks
W	424	GATE VALVE, KENNEDY	3"	324,067,014,001		EA	2	**Southern Pipe**	$681.50	2 weeks
W	425	GATE VALVE, M&H	4"	367,571,011,008		EA	2	**Southern Pipe**	$784.00	2 weeks
W	426	GATE VALVE, M&H	6"	467,571,011,008		EA	5	**Southern Pipe**	$961.67	2 weeks
W	427	TAPPING VALVE, MUELLER	6"	4,187,696	M&H	EA	2	**Southern Pipe**	$1,398.00	2 weeks
W	428	GATE VALVE, MUELLER	8"	080A236023LN	M&H	EA	5	**Southern Pipe**	$1,531.91	2 weeks
W	429	GATE VALVE	10"			EA	1	**Southern Pipe**	$2,388.74	2 weeks
W	430	GATE VALVE, M&H	12"	587,571,011,008		EA	1	**Southern Pipe**	$3,006.99	2 weeks
W	431	GATE VALVE, MUELLER	16"	11,505,876,777	M&H	EA	1	**Southern Pipe**	$8,335.00	2 weeks

WATER	ITEM #	DESCRIPTION	SIZE	APPROVED PART #	Alternate Part Number:	UNIT	EST. QTY. FY 26/27	BIDDER	UNIT PRICE	ESTIMATED DELIVERY TIME
		VALVE BOXES/RISERS								
W	436	SQUARE VALVE BOX CASTING & LID		JBS 8006		EA	15			
W	437	SQUARE STEEL VALVE BOX RISER	1.5"	JBS 8006		EA	5			
W	438	CONCRETE VALVE BOX RISER	2"			EA	15			
W	439	CONCRETE VALVE BOX RISER	4"			EA	15			
W	440	CONCRETE VALVE BOX RISER	6"			EA	15			
W	441	CONCRETE VALVE BOX RISER	12"			EA	10			
W	442	CONCRETE VALVE BOX RISER	18"			EA	10			
W	500	VALVE BOX EXTENSION, SIGMA	1"	VBR-1		EA	25			
W	501	VALVE BOX EXTENSION, SIGMA	1.5"	VBR-1.5		EA	25			
W	502	VALVE BOX EXTENSION, SIGMA	2"	VBR-2		EA	30			
W	503	VALVE BOX EXTENSION, SIGMA	3"	VBR-3		EA	25			
W	504	VALVE BOX EXTENSION, SIGMA	4"	VBR-4		EA	25			
W	505	VALVE BOX EXTENSION, SIGMA	6"	VBR-6		EA	25			
		HIGHLIGHTED PORTION IS ALSO ON THE GAS BID (G-232-237)	***PLEASE ALSO BID ON GAS (G-232-237) AS WELL***	***PLEASE ALSO BID ON GAS (G-232-237) AS WELL***						

WATER	ITEM #	DESCRIPTION	SIZE	APPROVED PART #	Alternate Part Number:	UNIT	EST. QTY. FY 26/27	BIDDER	UNIT PRICE	ESTIMATED DELIVERY TIME
		HYDRANTS								
W	448	BLOW OFF ABOVE GROUND, KUPFERLE	2" STRAIGHT BURY	MODEL 77		EA	8	**Southern Pipe**	**$940.32**	4 weeks
W	449	BLOW OFF BELOW GROUND, KUPFERLE	2" STRAIGHT BURY	MODEL 78		EA	5	**Southern Pipe**	$901.05	4 weeks
W	450	POST HYDRANT,	3' BURY, 3" MJ SHOE, 2-1/2" OUTLET	M&H MODEL 33		EA	2	**Southern Pipe**	$1,306.00	4 weeks
W	451	FIRE HYDRANT ASSEMBLY, M&H YELLOW	5 1/4" 3' 6"bury	MODEL 129 3-Way 1 Pumper/2 Hose		EA	6	**Southern Pipe**	$3,093.54	4 weeks
W	452	HYDRANT TRAFFIC REPAIR KIT, MUELLER	5 1/4"	MUELLER HRP301	Hydrant Repair Part HRPI-301	EA	5	**Southern Pipe**	$212.51	4 weeks
W	453	HYDRANT TRAFFIC REPAIR KIT, AMERICAN	5 1/4"	AMERICAN AD-B62B-KIT	Hydrant Repair Part HRPI-684	EA	1	**Southern Pipe**	$215.57	4 weeks
W	454	HYDRANT TRAFFIC REPAIR KIT, M&H	5 1/4"	M&H	Hydrant Repair Part HRPI-184	EA	5	**Southern Pipe**	$207.49	4 weeks
W	458	MUELLER EXTENSION KIT	5 1/4" X 6"	A320		EA	1	**Southern Pipe**	$466.99	4 weeks

W	459	MUELLER EXTENSION KIT	5 1/4" X 12"	A320-010		EA	1	**Southern Pipe**	$533.75	4 weeks
W	460	MUELLER EXTENSION KIT	5 1/4" X 18"	A320-16		EA	1	**Southern Pipe**	$598.39	4 weeks
W	461	MUELLER EXTENSION KIT	5 1/4" X 24"	A320-20		EA	1	**Southern Pipe**	$675.46	4 weeks
W	462	M&H EXTENSION KIT	5 1/4" X 6"			EA	1	**Southern Pipe**	$401.81	4 weeks
W	463	M&H EXTENSION KIT	5 1/4" X 12"	441129-5-12		EA	1	**Southern Pipe**	$453.42	4 weeks
W	464	M&H EXTENSION KIT	5 1/4" X 18"	441129-5-18		EA	1	**Southern Pipe**	$519.42	4 weeks
W	465	M&H EXTENSION KIT	5 1/4" X 24"	441129-5-24		EA	1	**Southern Pipe**	$579.98	4 weeks
WATER	**ITEM #**	8\	**SIZE**	**APPROVED PART #**	**Alternate Part Number:**	**UNIT**	**EST. QTY. FY 26/27**	**BIDDER**	**UNIT PRICE**	**ESTIMATED DELIVERY TIME**
		INSERT VALVE & SLEEVES								
W	480	INSERT VALVE & SLEEVE W/ INSTALLATION	6"	HYDRO-STOP INSTA-VALVE 250 PATROIT		EA	1			
W	481	INSERT VALVE & SLEEVE W/ INSTALLATION	8"	HYDRO-STOP INSTA-VALVE 250 PATROIT		EA	1			
W	482	INSERT VALVE & SLEEVE W/ INSTALLATION	10"	HYDRO-STOP INSTA-VALVE 250 PATROIT		EA	1			
W	483	INSERT VALVE &SLEEVE W/ INSTALLATION	12"	HYDRO-STOP INSTA-VALVE 250 PATROIT		EA	1			
W	484	INSERT VALVE & SLEEVE W/ INSTALLATION	16"	HYDRO-STOP INSTA-VALVE 250 PATROIT		EA	1			

		Smyrna							
		S = SEWER							
S	ITEM #	DESCRIPTION	SIZE	APPROVED PART #	ALTERNATE PART #	UNIT	EST. QTY. FY 26/27	BIDDER	UNIT PRICE
		RECLAIMED: METER BOXES and ACCESSORIES							
S	51	36H CONCRETE BOX METER BOX BODY ONLY		36H			6		
S	52	CI LID "SEWER" FOR 36H BOX		36T CI LID SEWER			6		
S	53	RECLAIMED WATER SQUARE VALVE BOX CASTING & LID		JBS 8006		EA	4		
S	54	SEWER SQUARE CLEANOUT CASTING & LID		JBS 8006		EA	6		
S	ITEM #	DESCRIPTION	SIZE	APPROVED PART #	ALTERNATE PART #	UNIT	EST. QTY. FY 26/27	BIDDER	UNIT PRICE
		MANHOLES							
S	58	MANHOLE CASTING/LID; JBS WATER TIGHT W/ T BAR	26"	JBS 1123		EA	2		
S	59	MANHOLE CASTING/LID; JBS	26"	JBS 1150		EA	2		
S	61	CONCRETE MANHOLE RISER	4"			EA	5		
S	62	CONCRETE MANHOLE RISER	6"			EA	5		
S	63	CONCRETE MANHOLE RISER	12"			EA	5		
S	64	MANHOLE RISER RING SOLID CAST IRON	24"x1.5"			EA	5		
S	65	MANHOLE RISER RING SOLID CAST IRON	26" x1.5"			EA	5		
S	ITEM #	DESCRIPTION	SIZE	APPROVED PART #	ALTERNATE PART #	UNIT	EST. QTY. FY 26/27	BIDDER	UNIT PRICE
		PIPE							
S	71	CTS ROLL REUSE PIPE (500' ROLLS) (PURPLE)	1"			FT	500		
S	72	CTS ROLL REUSE PIPE (500' ROLLS) (PURPLE)	2"			FT	500		
S	73	SEWER PIPE SCH 40	4"			FT	200		
S	74	C 900 REUSE WATER PIPE	4"			FT	50		
S	75	C 900 PURPLE PIPE	6"			FT	40		
S	77	SDR 21 SEWER PIPE	6"			FT	100		
S	78	SDR 26 SEWER PIPE	6"			FT	100		
S	80	CL 350 DUCTILE IRON SEWER PIPE W/ PROTECTO 401 LINING OR APPROVED EQUAL	8"			FT	50		
S	81	C900 REUSE WATER PIPE	8"			FT	40		
S	82	SDR 21 SEWER PIPE	8"			FT	100		
S	83	SDR 26 SEWER PIPE	8"			FT	100		
S	84	SDR 35 SEWER PIPE	8"			FT	20		
S	85	SDR 35 SEWER PIPE	10"			FT	20		
S	86	C900 REUSE WATER PIPE	12"			FT	20		
S	87	SDR 26 SEWER PIPE	12"			FT	100		
S	88	SDR11 IPS HDPE PIPE (RE USE)	6"			FT	20		
S	89	SDR11 IPS HDPE PIPE (RE USE)	8"			FT	20		
S	92	SDR 26 SEWER PIPE	15"			EA	20		
S	93	CL 350 DUCTILE IRON SEWER PIPE W/ PROTECTO 401 LINING OR APPROVED EQUAL	20"			EA	20		
S	ITEM #	DESCRIPTION	SIZE	APPROVED PART #	ALTERNATE PART #	UNIT	EST. QTY. FY 26/27	BIDDER	UNIT PRICE
		REPAIR CLAMPS							
S	96	SEWER REPAIR CLAMP;JCM	8" x 12" LONG (8.20-8.60)	101-0840-12		EA	2		
S	97	SEWER REPAIR CLAMP; ROMAC	12" (12.10 - 12.50)	171-125012000		EA	2		
S	ITEM #	DESCRIPTION	SIZE	APPROVED PART #	ALTERNATE PART #	UNIT	EST. QTY. FY 26/27	BIDDER	UNIT PRICE
		TAPPING SADDLES							
S	102	ROMAC SEWER TAPPING SADDLE	(8.00-14.40)	218-66640		EA	2		
S	ITEM #	DESCRIPTION	SIZE	APPROVED PART #	ALTERNATE PART #	UNIT	EST. QTY. FY 26/27	BIDDER	UNIT PRICE

SEWER MATERIAL BID LIST 2025-2026

		FITTINGS							
S	110	BRASS CLEAN-OUT CAP; MATCO-NORCA	4"	10082647091488		EA	15		
S	111	PLASTIC CLEAN-OUT CAP	4"			EA	10		
S	112	GLUE FEMALE ADAPTOR; MULTI FITTINGS	4"			EA	15		
S	114	GLUE LONG SWEEP TEE WYE; CHARLOTTE	4"	6 11 942 03564 9		EA	10		
S	115	GLUE 45° FEMALE COUPLING; LASCO	4"	10 02552871829 6		EA	5		
S	116	GLUE COUPLING; GPK	4"			EA	10		
S	117	GLUE 22° FEMALE COUPLING; LASCO	4"			EA	5		
S	119	QUICK CAP	6"			EA	2		
S	120	GLUE FEMALE ADAPTOR	6"			EA	15		
S	122	BRASS CLEAN-OUT CAP; MATCO-NORCA	6"			EA	20		
S	123	PLASTIC CLEAN-OUT CAP	6"			EA	2		
S	124	GLUE COUPLING; GPK	6"			EA	6		
S	125	GLUE 45° WYE; MULTI FITTINGS	6"	22454 40306		EA	15		
S	126	GLUE 22° FEMALE COUPLING; MULTI FITTINGS	6"	22434 40969		EA	5		
S	127	GLUE 22° MALE/FEMALE COUPLING; GPK	6"			EA	5		
S	128	GLUE 45° MALE/FEMALE COUPLING; MULTI FITTINGS	6"	22454 40406		EA	10		
S	129	GLUE 45 DEGREE/FEMALE COUPLING; MULTI FITTINGS	6"	22454 40506		EA	5		
S	130	SPIGOT x HUB SDR 35 x SCH 40	6" X 4"			EA	5		
S	**ITEM #**	**DESCRIPTION**	**SIZE**	**APPROVED PART #**	**ALTERNATE PART #**	**UNIT**	**EST. QTY. FY 26/27**	**BIDDER**	**UNIT PRICE**
		GASKET COUPLINGS							
S	135	GASKET COUPLING; MULTI FITTINGS	6"			EA	2		
S	136	GASKET 22° COUPLING; HARCO	6"			EA	2		
S	137	GASKET 45° COUPLING; HARCO	6"			EA	2		
S	138	GASKET 45° MALE/FEMALE; MULTI FITTINGS	6"			EA	2		
S	139	GASKET COUPLING; GPK	8"			EA	2		
S	142	WYE GASKET	8" X 6"			EA	2		
S	144	GASKET COUPLING; GPK	10"			EA	2		
S	145	GASKET COUPLING; GPK	12"	106-0012		EA	2		
S	147	GASKET COUPLING; IPEX	15"	043637		EA	2		
S	**ITEM #**	**DESCRIPTION**	**SIZE**	**APPROVED PART #**	**ALTERNATE PART #**	**UNIT**	**EST. QTY. FY 26/27**	**BIDDER**	**UNIT PRICE**
		FERNCOS							
S	152	COUPLING; FERNCO	4" CI/PVC X 4" CI/PVC	1056-44		EA	15	Southern Pipe	$5.20
S	153	COUPLING; FERNCO	4" CONC X 4" CI/PVC	1006-44		EA	6	Southern Pipe	$5.60
S	154	COUPLING; FERNCO	4" CLAY X 4" PVC	1002-44		EA	6	Southern Pipe	$5.20
S	155	COUPLING; FERNCO	6" CLAY X 4" PVC	1001-64		EA	6	Southern Pipe	$13.02
S	156	COUPLING; FERNCO	6" CI/PVC X 4" CI/PVC	1056-64		EA	6	Southern Pipe	$13.02
S	157	COUPLING; FERNCO	6" CONC X 6" CI/PVC	1006-66		EA	6	Southern Pipe	$12.28
S	158	COUPLING; FERNCO	6" CLAY X 6" PVC	1002-66		EA	6	Southern Pipe	$11.11
S	159	COUPLING; FERNCO	6" CLAY X 6' CLAY	1001-66		EA	6	Southern Pipe	$11.97
S	160	COUPLING;FERNCO	6" CI/PVC X 6" CI/PVC	1056-66		EA	8	Southern Pipe	$11.10
S	161	COUPLING; FERNCO	6" AC or DI X 6" CI or PVC	1051-66		EA	2	Southern Pipe	$11.95
S	162	COUPLING; FERNCO	8" CI/PVC X 6" CI/PVC	1056-86		EA	2	Southern Pipe	$20.63
S	163	COUPLING; FERNCO	8" CI X 8" CI	1056-84		EA	2	Southern Pipe	$86.27
S	164	COUPLING; FERNCO	8" CONC X 8" CI/PVC	1006-68		EA	2	Southern Pipe	$83.13
S	165	COUPLING; FERNCO	8" CLAY X 8" PVC	1002-88		EA	2	Southern Pipe	$17.08
S	166	COUPLING; FERNCO	10" CI/PVC X 10" CI/PVC	1056-1010		EA	2	Southern Pipe	$25.09
S	167	COUPLING; FERNCO	10" CLAY X 10" CI/PVC	1004-88		EA	2	Southern Pipe	$58.24
S	168	COUPLING; FERNCO	10" CONC X 10" CI/PVC	1055-1010		EA	2	Southern Pipe	$25.65
S	169	COUPLING; FERNCO	12" CI/PVC X 12" CI/PVC	1056-1212		EA	2	Southern Pipe	$29.93
S	170	COUPLING; FERNCO	12" CLAY X 12" CI/PVC	1002-1212		EA	2	Southern Pipe	$29.93
S	171	COUPLING;FERNCO	12" CONC X 12" PVC	1006-1212		EA	2	Southern Pipe	$29.92
S	172	COUPLING;FERNCO	15" CLAY X 15" PVC	1002-1515		EA	2	Southern Pipe	$47.06

LEGAL NOTICE

INVITATION TO SUBMIT QUOTATIONS

The Town of Smyrna will accept quotations on the annual Gas, Water and Sewer materials for the Utilities Department. Bidders shall submit sealed quotations in the format specified in the Invitation to Submit Quotations no later than **2:00 p.m. May 19, 2026** at which time the bids will be publicly opened and read aloud. No bid may be withdrawn after the scheduled closing time for a period of 90 days. Bidding documents may be obtained at Smyrna Town Hall during regular business hours or www.townofsmyrna.org. Quotations should be mailed or hand delivered to:

Purchasing Department
Smyrna Town Hall
Sealed Bid on Annual Gas, Water & Sewer Materials
May 19 @ 2:00 p.m.
315 South Lowry Street
Smyrna, TN 37167

The Town of Smyrna will not discriminate in the purchase of all goods and services on the basis of race, color, religion, sex, national origin, age, disability or any other lawfully protected classification.

Verbal quotations, faxed quotations or quotations received after the closing date will not be accepted. The Town of Smyrna reserves the right to reject any and all bids, to waive technicalities or informalities and to accept any bid deemed to be in the best interest of the Town.

BY: Sierra Lowry
Finance Director

TO BE RUN: May 5, 2026

United Systems & Software
COMPANY NAME

TABLE OF CONTENTS

		PAGE
SECTION I -	GENERAL INFORMATION	3
SECTION II -	SPECIFICATIONS AND PRICE QUOTATION	5
	INSURANCE REQUIREMENTS	6
	AGREEMENT	10
SECTION III –	SPECIFICATION COMPLIANCE	16
	ATTACHMENT A	17

SPREADSHEETS & DRAWINGS

SECTION I – GENERAL INFORMATION

A. The Town of Smyrna desires to purchase annual gas, water and sewer materials for the Utilities Department for the fiscal year July 1, 2026 through June 30, 2027.

Location of Smyrna Town Hall:
315 South Lowry Street
Smyrna, TN 37167

Delivery Locations:
Gas: 108 G Street, Smyrna
Water & Sewer: 106 G Street, Smyrna
Call for delivery appointment.

B. Questions should be directed to Kevin Scott 615-479-4895. Email address: kevin.scott@townofsmyrna.org.

C. The Town of Smyrna reserves the right to reject any and all bids, to waive technicalities or informalities and to accept any bid deemed to be in the best interest of the Town. No bid may be withdrawn after the scheduled closing time for a period of 90 days.

D. The bidder shall abide by and comply with the true intent of the specifications and not take advantage of any unintentional error or omission, but shall fully address the full intent and meaning of each aspect of the specifications.

E. **Equals must be pre-approved by Kevin Scott prior to bid opening. All items to be ordered as needed**. Quantities are **estimated** on annual usage.

F. All materials in the bid documents have been placed into specific categories within each department. Each category shall be considered as a whole and not broken apart (See example in Attachment A).

G. Section II, III and contract Agreement shall be **completed** and **included** as an integral part of each bidder's proposal. Successful bidder will be expected to enter into a contract Agreement with the Town. Agreement shall be signed, but not dated, by the proper business representative and submitted **with** the bid proposal. An executed contract will be forwarded to winning vendor after Council approval.

H. Freight shall be paid by vendor and should be included in unit price bid.

I. The Town is a tax-exempt organization.

J. Mail is delivered after 11:00 a.m. Monday through Friday.

K. Bid quotations **must** be submitted on the Town's quotation page(s). No exceptions.

L. THIS ORDER WILL EXPIRE JUNE 30, 2027.

M. By submission of this bid, each bidder/proposer and each person signing on behalf of any bidder certifies, and in the case of a joint bid each party thereto certifies as to its own organization, under penalty of perjury, that to the best of its knowledge and belief that each bidder is not on the list created pursuant to T.C.A. § 12-12-106 Iran

Divestment Act. For reference purposes, the list is currently available online at: State of TN_Debarred_Vendors.pdf

SECTION II – SPECIFICATIONS AND PRICE QUOTATION

Base Bid Schedule

See Attached Spreadsheets

All materials have been placed into specific categories within each department. Each category shall be considered as a whole and not broken apart. An example of the format is included in Attachment A.

The Town of Smyrna has included a spreadsheet with this document. The spreadsheet has been included for bidding convenience. Each bidder is responsible for the information and mathematical accuracy. Please check and double check your bid prior to submitting.

ESTIMATED DELIVERY TIME MUST BE INCLUDED FOR ITEMS.

Compliance with laws:

The contractor must comply with all applicable federal and state law including the prevailing wage laws.

Contractor must provide adequate proof of insurance with the bid.

INSURANCE REQUIREMENTS

The Vendor shall purchase and maintain for the duration of the contract insurance against claims for injuries to persons or damages to property which may arise from or in connection with the performance of the work hereunder by the Vendor, its agents, representatives, employees or subcontractors.

A. MINIMUM SCOPE AND LIMITS OF INSURANCE

1. **Workers Compensation**
   Workers Compensation insurance shall be in compliance with the State of Tennessee and shall be statutory. Employers Liability shall be included with a minimum limit of $500,000 per accident/per disease/per employee.

2. **Commercial General Liability**
   Commercial General Liability insurance shall have a minimum limit per occurrence of $1,000,000 and a minimum general aggregate of $2,000,000. It shall include completed operations, product liability and personal injury liability insurance.

3. **Automobile Liability**
   Automobile Liability Insurance shall have a minimum combined single limit per occurrence of $1,000,000. This insurance shall include third-party bodily injury and property damage liability for owned, hired, borrowed and non-owned automobiles.

B. DEDUCTIBLES AND SELF-INSURED RETENTIONS

Any deductibles or self-insured retentions must be declared to the Town of Smyrna. The Vendor shall be responsible for all deductibles and self-insured retentions.

C. OTHER INSURANCE PROVISIONS

The policies are to contain, or be endorsed to contain, the following provisions:

1. General Liability and Automobile Liability Coverages

   a. The Town, its elected and appointed officials, agents, employees and volunteers shall be named as an additional insured as regards negligence by the vendor.

   b. The Vendor's insurance shall be primary as respects the Town, its elected and appointed officials, agents, employees and volunteers. Any insurance or

self-insurance maintained by the Town of Smyrna shall be excess and non-contributory of the Vendor's insurance.

2. Workers Compensation and Employers Liability Coverage

   The insurer shall agree to waive all rights of subrogation against the Town, its elected and appointed officials, agents, employees and volunteers for losses arising from work performed by the Vendor for the Town of Smyrna.

3. All Coverages

   a. Coverage shall not be canceled, suspended, or voided by either party (the Vendor or the insurer) or reduced in coverage or in limits except after 30 days written notice has been given to the Town of Smyrna. Ten-day written notice of cancellation is acceptable for non-payment of premium. Notifications shall comply with the standard cancellation provisions in the Vendor's policy.

   b. Neither the acceptance of the completed work nor the payment thereof shall release the Vendor from the obligations of the insurance requirements or indemnification agreement.
   c. The insurance companies issuing the policies shall have no recourse against the Town of Smyrna for payment of premiums or for assessments under any form of the policies.

   d. Replacement certificates, policies or endorsements shall be provided to the Town for any such insurance expiring prior to the completion of services.

   e. Any failure of the Vendor to comply with reporting provisions of the policy shall not affect coverage provided to the Town, its elected and appointed officials, agents, employees and volunteers.

D. ACCEPTABILITY OF INSURERS

All required insurance shall be provided by a company or companies licensed to conduct business in the State of Tennessee. Insurance shall be underwritten by insurers with an A.M. Best Company ratings no less than an A.

E. VERIFICATION OF COVERAGE

The Vendor shall furnish the Town with Certificates of Insurance reflecting proof of required coverage. The Certificates for each insurance policy are to be signed by a person authorized by that insurer to bind coverage on its behalf. **The Certificates are to be received and approved by the Town before work commences and upon any contract renewal thereafter.**

Upon failure of the Vendor to furnish, deliver and maintain such insurance as requested, this contract, at the election of the Town, may be suspended, discontinued or terminated. Failure of the Vendor to purchase and/or maintain any required insurance shall not relieve the Vendor from any liability or indemnification under the contract.

The Certificate of Insurance naming the "Town of Smyrna" as **Additional Insured** shall be addressed to the attention of:

Town of Smyrna
Department of Safety & Risk Management
ATTN: Henry Urbina
315 S Lowry St
Smyrna, TN 37167

It can also be submitted electronically to henry.urbina@townofsmyrna.org. The subject line has to indicate the name of the project.

The Town reserves the right to request complete certified copies of all required insurance policies at any time.

F. SUBCONTRACTORS

Vendor shall include all subcontractors as insureds under its policies **OR** shall be responsible for verifying and maintaining the Certificates provided by each subcontractor. Subcontractors shall be subject to all of the requirements stated herein. The Town of Smyrna reserves the right to request copies of subcontractor's Certificates at any time.

G. WORKERS' COMPENSATION INDEMNITY

In the event Vendor is not required to provide or is exempt from providing workers' compensation coverage, the parties hereby agree that Vendor, its owners, agents and employees will have no cause of action against, and will not assert a claim against the Town of Smyrna, its elected and appointed officials, agents, employees and volunteers, under any circumstances. The parties also hereby agree that the Town of Smyrna, its elected and appointed officials, agents, employees and volunteers shall in no circumstance be, or considered as, the employer or statutory employer of Vendor, its owners, agents and employees. The parties further agree that Vendor is a wholly independent vendor and is exclusively responsible for its employees, owners, and agents. Vendor hereby agrees to protect, defend, indemnify and hold the Town of Smyrna, its elected and appointed officials, agents, employees and volunteers harmless from any such assertion or claim that may arise from the performance of this contract.

HOLD HARMLESS AND INDEMNITY REQUIREMENT:

Vendor shall indemnify and hold harmless, to the maximum extent permitted by law, the Town of Smyrna and its officers, agents, employees, volunteers, from and against any and all liability, damages, losses, (whether in contract or in tort, including personal injury, accidental death or property damage, and regardless, of whether the allegations are false, fraudulent or groundless), and costs (including reasonable attorney's fees, litigation, arbitration, mediation, appeal expenses) which in whole or in part are caused by the negligence, recklessness or intentional wrongful misconduct of the Vendor and

persons employed by or utilized by the Vendor in Vendor's performance of this Agreement.

The vendor further agrees to protect, defend, and save the Town, its elected and appointed officials, agents, employees and volunteers while working in the scope of their duties as such, harmless from and against all claims, demands, and causes of action of any kind of character, including the cost of their defense, arising in favor of the vendor's employees or third parties on account of bodily or personal injuries, death or damage to property arising out of services performed or omissions of services or in any way resulting from the acts of omissions of the vendor and/or its agents, employees, subcontractors, representative of the Town under this agreement.

Pursuant to Tennessee Attorney General Opinion 93-01, the Town will not indemnify, defend or hold harmless in any fashion the Vendor from any claims arising from any failure, regardless of any language in any attachment or other document that the Vendor may provide.

APPLICABLE LAW:

Any contract resulting from this ISQ shall be governed by and construed under the laws of the State of Tennessee.



AGREEMENT

This Agreement is made and entered into as of this _____ day of _____, 20___, by and between _____, a _____ _____ (the "Bidder") and the Town of Smyrna, Tennessee, a Tennessee municipal corporation (the "Town") for the purpose of _____.

WHEREAS, the Bidder has submitted a quotation for the provision of certain products and/or services to the Town, all in accordance with the terms of the Invitation to Submit Quotations attached hereto and incorporated herein by reference as if set forth at length verbatim as Exhibit A (the "ISQ"), and which Proposal from the Bidder is attached hereto and incorporated herein by reference as if set forth at length verbatim as Exhibit B (the "Quotation"); the ISQ and the Quotation, together with any and all ancillary documents thereto, shall be collectively referred to herein as the "Bid Documents"; and

WHEREAS, the Town now desires to accept the Bidder's quotation, in accordance with the terms set forth in such Bid Documents.

NOW, THEREFORE, in consideration of the mutual covenants contained herein, and for other good and valuable consideration, the receipt and sufficiency of which is hereby acknowledged, the undersigned do hereby agree as follows:

1. Acceptance of Bid Documents. The terms of the Bid Documents, as incorporated herein by reference, are hereby accepted by the parties hereto. The Bidder hereby agrees to provide the goods and/or services contemplated by such Bid Documents in accordance with the terms set forth therein. The Town hereby accepts the Bidder's quotation to provide the goods and/or services contemplated by such Bid Documents in accordance with the terms set forth therein.

2. Entire Agreement. This Agreement, including the exhibits and any other documents referred to herein or therein, which form a part hereof, contains the entire understanding of the parties with respect to its subject matter. There are no restrictions, agreements, promises, warranties, covenants or undertakings other than those expressly set forth herein or therein. This Agreement supersedes all prior written or oral agreements and understandings between the parties with respect to its subject matter and may not be altered, modified or amended, in whole or in part, except by the express written authorization and consent of the parties hereto.

3. Severability. This agreement constitutes the product of negotiations of the parties hereto and any enforcement of hereof will be interpreted in a neutral manner and not more strongly against any party based upon the source of the draftsmanship of this Agreement. If any provision of this Agreement shall be held invalid or unenforceable by a court of competent jurisdiction, the remaining provisions hereof shall continue to be fully effective.

4. Limitation of Liability. The Town of Smyrna shall not be liable for any loss, claim, expense or damage caused by, contributed to or arising out of the acts or omission of Bidder or third parties, whether negligent or otherwise.

5. Warranties. The Bidder warrants to the Town that all materials and equipment furnished under this Contract will be new unless otherwise specified, and that all work will be of good quality, free from faults and defects, suitable for the purpose for which the materials and equipment are furnished, and in conformance with the Agreement. If it does not perform as warranted, Bidder shall use all commercially reasonable efforts to correct the product(s) so that it operates in all material respects in conformity with the written representations of Bidder. If Bidder cannot correct the product(s) within a reasonable period of time, Bidder shall refund the purchase price of the product(s). All work not conforming to these requirements, including substitutions not properly approved and authorized, may be considered defective.

6. Software Deadline, Testing and Acceptance: If applicable to the Agreement, software provided by Bidder shall be installed for the purposes of testing, as stated herein below, no later than one hundred twenty (120) days from the effective date of this Agreement unless the parties, in writing, set a different specific date. In Addition, software provided by Bidder to The Town is subject to inspection and testing to verify that the software conforms to its written specifications and to ensure it meets The Town's needs. The Town shall have seven (7) business days after the software is installed to perform testing of the software using The Town's data. The Town shall provide Bidder with written notice of acceptance or rejection of the software five (5) business days or less after the end of the testing period. If the Town does not provide timely written notice of acceptance or rejection to Bidder, the software shall be deemed to be accepted by The Town. If the software is rejected, The Town may, at its sole discretion, either (1) return the software and receive a refund of all fees paid with respect thereto, or (2) allow Bidder to repair or replace the software, without charge, in a timely manner. In the event The Town elects to allow the Bidder to repair or replace the software, The Town shall have an additional (7) business days in which to accept or reject the software as laid out hereinabove.

7. Use of The Town's Logo or Name: Bidder shall not use The Town's name or any logo in marketing or publicity materials or for marketing or publicity purposes without the prior written authorization from The Town. Bidder shall not issue, publish, or divulge any materials developed or used in the performance of this Agreement or make any statement to the media relating to this Agreement without the prior written consent of The Town.

8. Indemnification. The parties hereto agree that Bidder shall indemnify The Town for any and all claims of negligence, tortious conduct or otherwise unlawful acts committed by Bidder in the performance of their obligations under the terms of this agreement, including any and all attachments or exhibits thereto and Bidder agrees to pay any and all costs associated with the enforcement of the terms of this indemnity agreement by The Town, including but not limited to, court costs, civil judgments, assessments or any other reasonable fees associated therewith. This clause shall survive the expiration or termination of this Agreement and shall remain in full force and effect until the expiration of any applicable statute of limitation. In addition, Article II, Section 29 of the Tennessee Constitution prohibits municipalities from lending their credit to private of public entities and, therefore, prohibits an agreement by The Town to indemnify a third party or agree to a limitation of liability provision.

9. Non-Appropriation: Bidder acknowledges that The Town is a governmental entity, and the validity of this Agreement is based upon the availability of public funding under its authority. In the event The Town fails to appropriate funds or make monies available for any fiscal year covered by the term of this Agreement for services to be provided, this Agreement shall be terminated on the last day of the fiscal year for which funds were appropriated or monies made available for such purposes without liability to The Town, and such termination shall not be a breach of the Agreement, and any unused payment made to Bidder shall be returned to The Town.

10. Tax Exemption: As a tax-exempt entity, The Town shall not be responsible for sales or use taxes incurred for products or services. The Town shall supply Bidder with its Sales and Use Tax Exemption Certificate upon Bidder's request. Bidder shall bear the burden of providing its suppliers with a copy of The Town's tax exemption certificate and Bidder shall assume all liability for such taxes, if any, that should be incurred.

11. Attorney Fees. The parties hereto agree that The Town shall be in no event liable for any attorney's fees which Bidder may incur due to breach of this Agreement by either party; and further, The Town shall not acquiesce to any term in any document that indicates or infers The Town may or shall be responsible for the Attorney's fees of another party or the Bidder's attorney fees.

12. Boycott of Israel. The Bidder certifies that it is not currently engaged in, and covenants that it will not, for the duration of the Contract, engage in a Boycott of Israel, as that term is defined in Tenn. Code Ann. § 12-4-119.

13. Failure to perform. The parties agree, in the event Bidder fails to perform any obligation, other than with regards to the date of delivery, set out in this Agreement, the Town shall be reimbursed by Bidder for any and all expenses associated with having to obtain a new provider to finish out the contracted term, including, but in no way limited to, any charges/fees, which are above and beyond the amount the Town would have paid to Bidder to complete the same task; provided, however, that if the failure, by its nature, is one that can be cured, the Bidder shall have fifteen (15) business days after receipt of written notice from the Town to cure said failure to perform. The parties hereby agree, unless a specific date of delivery is provided in this Agreement or other bid documents, all deliveries shall be made to the Town no later than ninety (90) days from the date of order. The parties further agree that if Bidder, in good faith, is not able to meet this ninety (90) day deadline of delivery due to forces beyond his, her or its control, that were unforeseeable at the time of signing this contract, then this entire Agreement shall be voidable at the sole discretion of the Town. Should the Town elect to void this Agreement due to Bidder's good faith inability, due to forces beyond his, her or its control, and which were unforeseeable at the time of signing this Agreement to meet the delivery deadline, then neither party shall be deemed to have breached this Agreement, and Bidder shall return all monies, within seven (7) business days, paid by the Town for the products/items that could not be delivered in the allotted time.

14. Unilateral Modification of Agreement Not Permitted: Bidder may make unilateral changes to its Privacy Policy, provided any such changes are subject to the provisions of this Agreement but shall not materially alter the use of the service or reduce the level of protection provided to the Town at the time of the execution of this Agreement. Except as provided in the preceding sentence, notwithstanding anything in this Agreement to the contrary, any change to this Agreement made by Bidder that is not in writing and that is not properly executed by the signatures of authorized representatives of the parties hereto, including attestation by The Town's Clerk and approved as to form by the Town Attorney are subject to the terms and conditions of this Agreement.

15. Changes to Terms: Except as provided in Paragraph No. 13 above pertaining to Bidder's Privacy Policy, Bidder shall provide The Town written notice, sent in care of Town Attorney's Office, Smyrna, Tennessee, 315 South Lowry Street, Tennessee 37167, of any proposed change to this Agreement at least ninety (90) days prior to being effective to The Town. The Town shall have thirty (30) days after receiving the written notice to terminate this Agreement, and such cancellation shall not be a breach of this Agreement. Bidder will refund to The Town any payment made by The Town to Bidder equal to the difference between the number of months the payment was intended for and the number of months remaining on this Agreement that the fee was intended to cover.

16. Price Assurance: Unless specifically stated in this Agreement or other bid documents, the bid price shall be valid for the full term of this Agreement. If the Bidder, specifically states that he, she or it cannot honor the bid price for the full term of this Agreement; then this Agreement is voidable at the sole discretion of the Town, if at any time during the full term of this Agreement, Bidder requests to raise the bid

price. If the Town elects to void this Agreement, at its sole discretion, it shall not be deemed to be a breach of the contract by either party.

17. Confidentiality. The Town, as a Tennessee Municipal Corporation is subject to the Tennessee Open Records Act, set out in T.C.A. §10-7-503 et seq; therefore, this Agreement and all documents or materials, in any format, including, but not limited to paper, electronic or virtual, that are public records pursuant to law, are not confidential and are subject to disclosure. The Town will respond to all proper Open Records Requests in the time allowed by law, without any requirement to disclose such request to Bidder or provide Bidder with notice or the time to obtain a protective order. The Town does not have the burden of establishing that information is not confidential information or that its release is authorized to release the records. This section 16 serves to meet such burden and authorization of disclosure.

18. Mediation. The Town may, at its option, require the attempted resolution of any dispute arising under this Agreement by mediation prior to the filing of any lawsuit or other claim. Should any dispute arise, Bidder shall provide the Town notice of any intent to file suit by certified mail. The Town shall notify the Bidder of its intent to exercise its right to mediation within thirty (30) days of receiving such notice. If the Town does not exercise its right to mediation, Bidder may file suit. Any mediator selected under this clause shall be agreed upon by the parties and the costs of such mediation shall be divided and paid equally between the parties.

19. No Presumption Against Drafter: The parties are both business entities having substantial experience with the subject matter of this Agreement, and each has fully participated in the negotiation and drafting of this Agreement. Accordingly, this Agreement shall be construed without regard to the rule that ambiguities in a document are to be construed against the draftsman. No inferences shall be drawn from the fact that the final, duly executed Agreement differs in any respect from any previous draft hereof.

20. Governing Law. This Agreement shall be deemed to have been executed and delivered within the State of Tennessee, and the rights and obligations of the parties shall be construed and enforced in accordance with, and governed by, the laws of the State of Tennessee. The parties agree that all obligations of the parties are performable in Smyrna, Tennessee.

21. Choice of Forum and Venue. The parties' choice of forum and venue shall be exclusively in the courts of Rutherford County, Tennessee or the United States District Court, for the Middle District of Tennessee. The parties hereby waive their right to a jury trial. Any provision of the Agreement held to violate a law or regulation shall be deemed void, and all remaining provisions shall continue in force.

IN WITNESS WHEREOF, the undersigned have executed this Agreement as of the date set forth above.

TOWN OF SMYRNA, TENNESSEE

By: _____
Name: Mary Esther Reed
Title: Mayor

ATTEST:

_____
Amber Hobbs, Town Clerk

BIDDER:

By: _____
Title: _____

ATTEST:

_____

SECTION III - SPECIFICATIONS COMPLIANCE

Unless otherwise noted, all quotations for the annual gas, water and sewer materials shall be in complete accordance with the specifications detailed herein.

Bidders shall note in the space provided below any exceptions or deviations in any way from the specifications of any section of this ISQ. Bidders should provide complete detail of exceptions or deviations.

Proposal Exceptions

Section	Brief Description

By signature below, vendor acknowledges any quotation to be in full compliance with all aspects of each section of the ISQ not noted above. The undersigned hereby declares that no person or party other than the undersigned has any interest whatever in this proposal, that it is without any connection or collusion with any person or persons making or having made any proposal for the same work and without any previous understanding with such person or persons as to relative prices, obviating competition, and that it is made in good faith.

United Systems & Software
COMPANY

270-493-0289
TELEPHONE NUMBER

Kyle Deering
REPRESENTATIVE NAME

Sr. Account Manager
REPRESENTATIVE TITLE

Kyle M. Dy
SIGNATURE

kyled@united-systems.com
E-MAIL ADDRESS

Attachment A

Cutoffs

DESCRIPTION	Estimated Bid Qty	Vendor A Unit Price	Cost	Vendor B Unit Price	Cost	Vendor C Unit Price	Cost
3/4" STOPCOCK; JOMAR 241-004B	150	$12.00	$1,800.00	$9.00	$1,350.00	$1.00	$150.00
3/4" STOPCOCK, HIGH PRESSURE, MUELLER	20	$18.00	$360.00	$17.00	$340.00	$2.00	$40.00
1" STOPCOCK; JOMAR 241-005B	30	$13.75	$412.50	$13.00	$390.00	$3.00	$90.00
1 1/4" STOPCOCK; 175 MAOP MUELLER	10	$14.50	$145.00	$16.00	$160.00	$4.00	$40.00
1 1/2" STOPCOCK; 175 MAOP MUELLER	10	$15.00	$150.00	$14.00	$140.00	No Bid	$0.00
2" STOPCOCK; 175 MAOP MUELLER	30	$16.00	$480.00	$20.00	$600.00	$6.00	$180.00
	Totals		$3,347.50		$2,980.00		$500.00
	Low Bidder						
	Incomplete Bid						

Category Calculation Guidelines:

1. Multiply estimated quantity times bid unit price for cost of each category item
2. Add costs in category for each vendor to obtain category total cost per vendor
3. Any unit price omitted from category will result in incomplete bid for given category
4. Low bidder, meeting all other requirements, shall be awarded the entire category

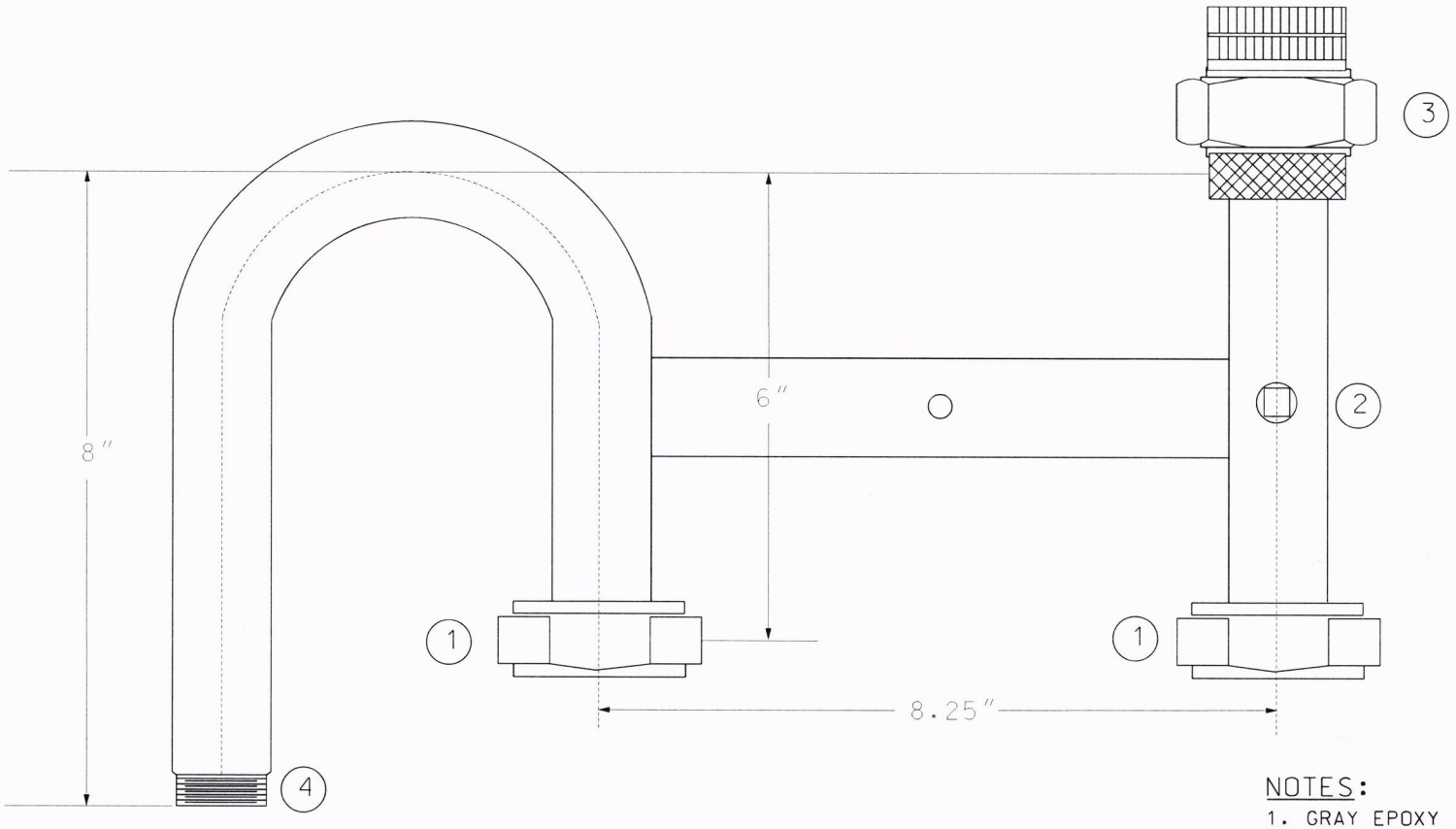

NOTES:

1. GRAY EPOXY
2. TEST 100# FOR 10 SEC.
3. ASSEMBLE AND SHIP
4. 1¼″ SCH 40 PIPE

ITEM	QUAN	DESCRIPTION
1	2	30 LT SWIVEL AND NUT
2	1	¼″ TEST PLUG
3	1	1¼″ INSULATED UNION
4	1	1″ INLET

TOWN OF SMYRNA
315 S. Lowry Street, Smyrna, TN 37167
(615)355-5711 Fax: (615)355-5799

SMYRNA GAS SYSTEM
1¼″ METER BAR

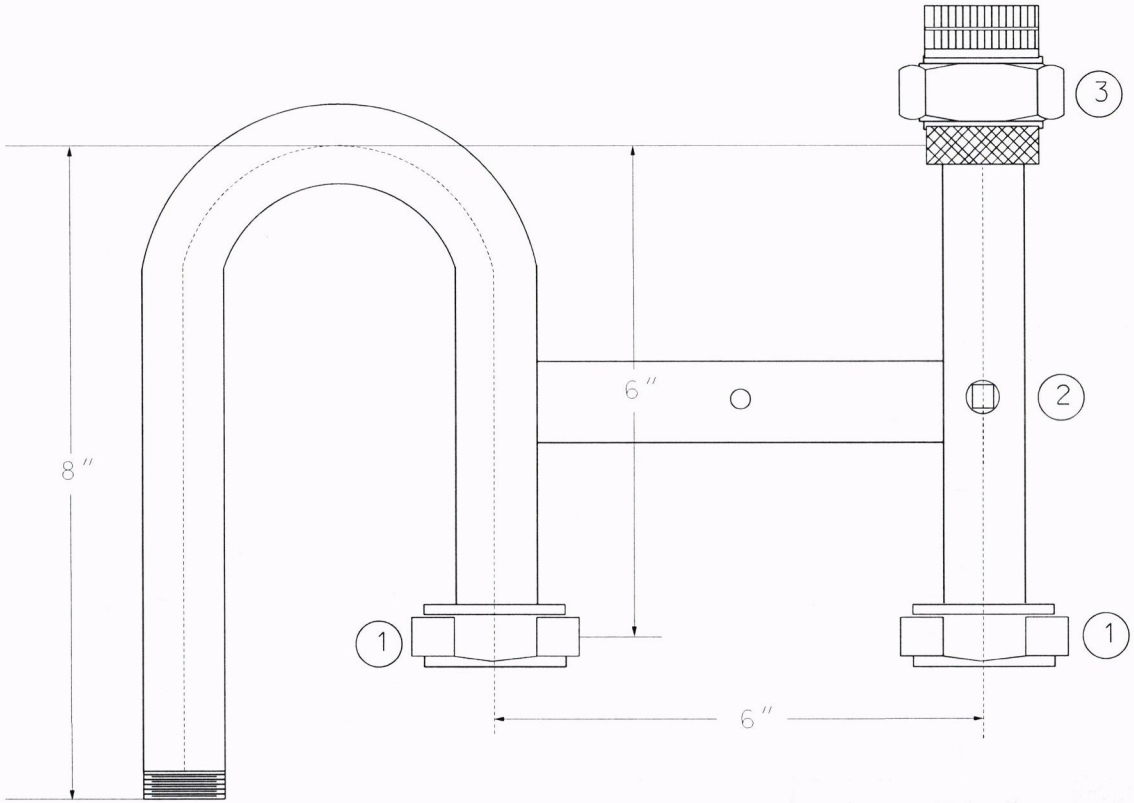

NOTES:

1. GRAY EPOXY
2. TEST 100# FOR 10 SEC.
3. ASSEMBLE AND SHIP
4. 1″ SCH 40 PIPE

ITEM	QUAN	DESCRIPTION
1	2	20 LT SWIVEL AND NUT
2	1	1/4″ TEST PLUG
3	1	1″ INSULATED UNION

TOWN OF SMYRNA
315 S. Lowry Street,Smyrna, TN 37167
(615)355-5711 fax: (615)355-5799

SMYRNA GAS SYSTEM
1″ METER BAR

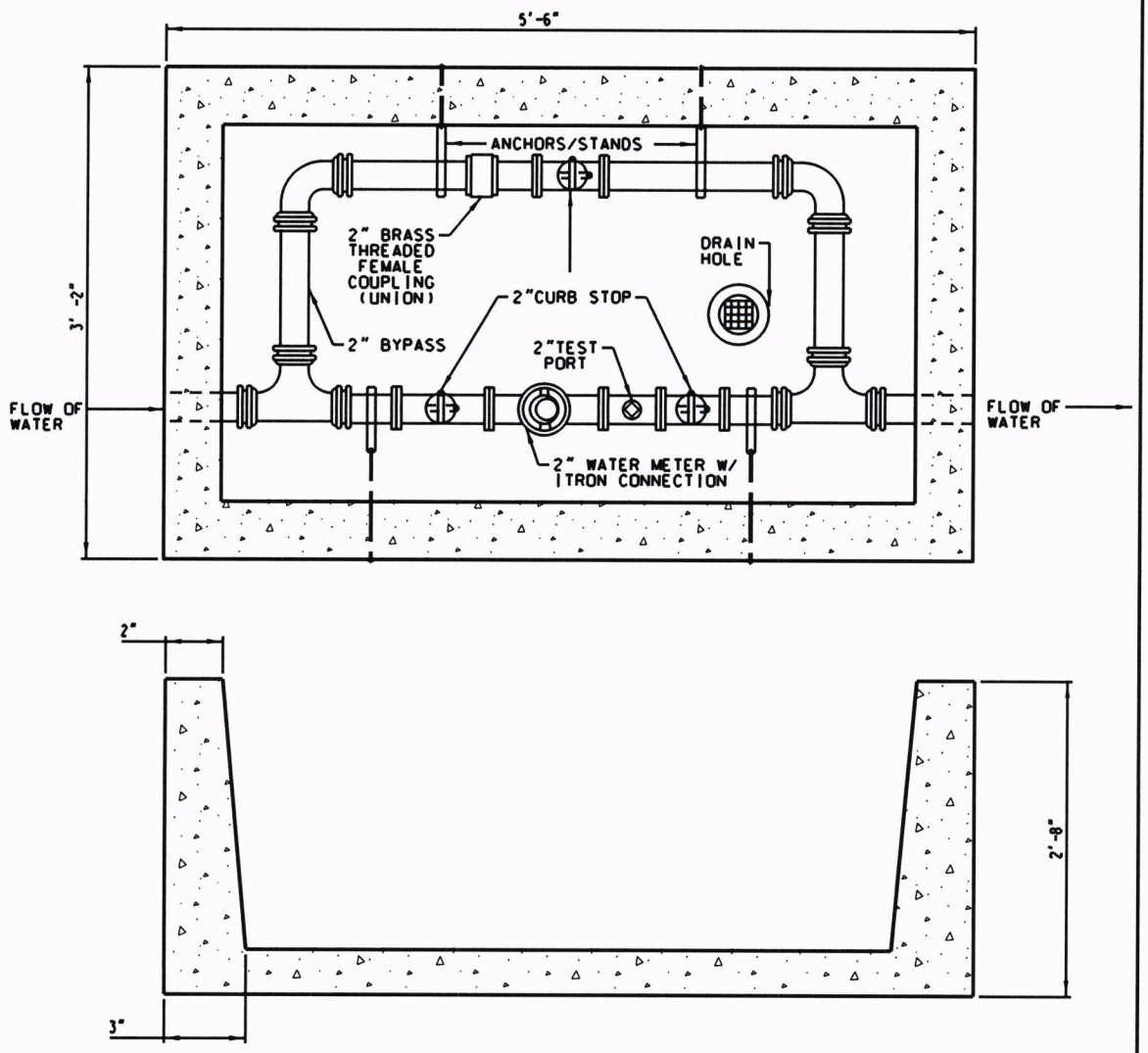

2" METER PIT DETAIL (1 OF 2)

GENERAL NOTES:

1. VAULT SHALL BE A HOLTON CONCRETE VAULT OR AN APPROVED EQUAL. ALL CONCRETE VAULTS' CONCRETE SHALL HAVE A MINIMUM OF 4,000-psi. STRENGTH AND CURRED FOR 28-DAYS.

2. ULTRASONIC METERS MANUFACTURED BY NEPTUNE METERS SHALL BE USED. METER TO MEASURE IN U.S. GALLONS AND SET TO READ IN 100s. THE METER SHALL HAVE AN ITRON CONNECTION WITH 5ft. LEAD FOR 2" METERS. ALL METERS SHALL COME EQUIP WITH A FLANGE PACK.

3. ALL PIPE SHALL BE ASTM B43 BRASS OR APPROVED EQUAL.

4. ALL PIPE FITTINGS SHALL BE ASTM B43 BRASS OR APPROVED EQUAL.

5. THE 2" CURB STOPS SHALL BE A FORD (PART NO. B13-777W-NL) OR APPROVED EQUAL. FOR THE 2" BYPASS. THE 2" CURB STOP SHALL BE A FORD (PART NO. B11-777W-NL) OR APPROVED EQUAL.

6. CONCRETE VAULT TO MEET THE CURRENT REQUIREMENTS OF ASTM C857 AND C858 FOR STRUCTUAL DESIGN AND LOADINGS.

7. VAULT HATCH SHALL BE FULL SIZE ALUMINUM LID. HALLIDAY MODEL S1R029059C--BD---- OR APPROVED EQUAL. ALL VAULT HATCHES SHALL HAVE 2" THICK WEATHER AND WATER PROOFED INSULATION.

8. DRAIN LINE SHALL BE 4" CLASS 200 PVC.

9. TEST PORT TO BE 2" WITH A 2" CURB STOP AND PLUG.

10. METER MUST BE EQUIPPED WITH AN ITRON AMI CONNECTION.

2" METER PIT DETAIL (2 OF 2)

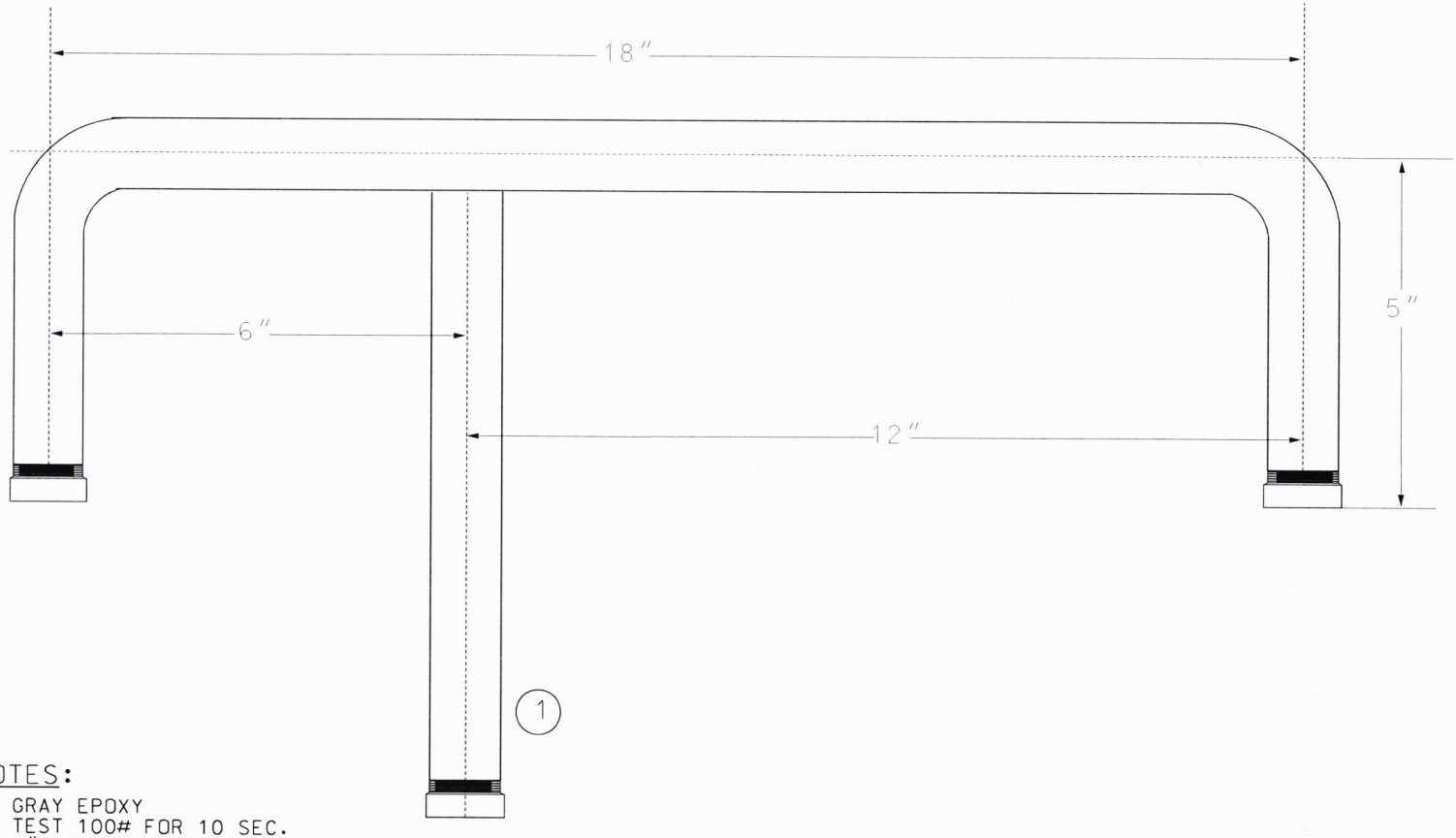

NOTES:

1. GRAY EPOXY
2. TEST 100# FOR 10 SEC.
4. 1″ SCH 40 PIPE

ITEM	QUAN	DESCRIPTION
1	1	1″ NIPPLE, 9″ LONG

TOWN OF SMYRNA
315 S. Lowry Street,Smyrna, TN 37167
(615)355-5711 fax: (615)355-5799

SMYRNA GAS SYSTEM
2 METER MANIFOLD

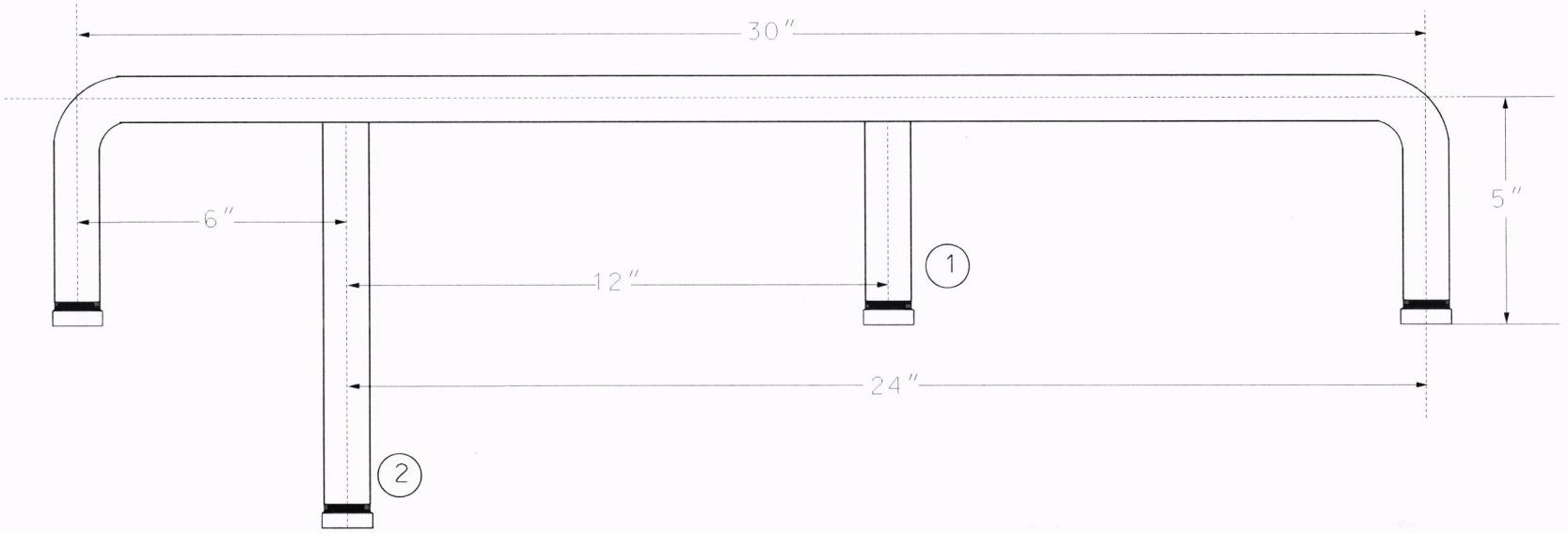

NOTES:

1. GRAY EPOXY
2. TEST 100# FOR 10 SEC.
4. 1″ SCH 40 PIPE

ITEM	QUAN	DESCRIPTION
1	1	1″ NIPPLE, 4 1/2″ LONG
2	1	1″ NIPPLE, 9″ LONG

TOWN OF SMYRNA
315 S. Lowry Street,Smyrna, TN 37167
(615)355-5711 Fax: (615)355-5799

SMYRNA GAS SYSTEM
3 METER MANIFOLD

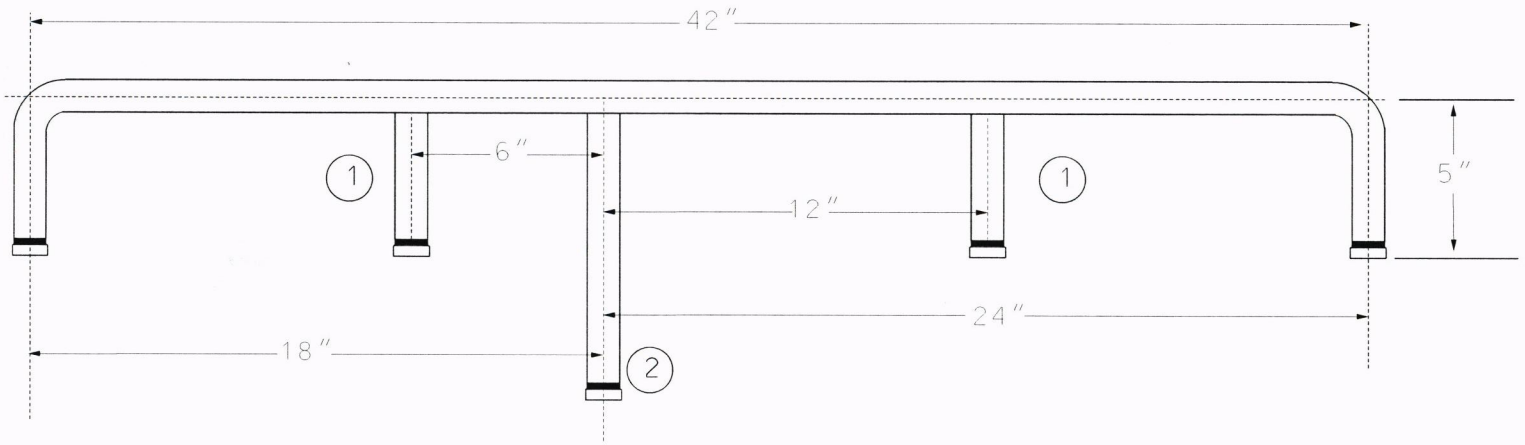

NOTES:

1. GRAY EPOXY
2. TEST 100# FOR 10 SEC.
4. 1" SCH 40 PIPE

ITEM	QUAN	DESCRIPTION
1	2	1" NIPPLE, 4 1/2" LONG
2	1	1" NIPPLE, 9" LONG

TOWN OF SMYRNA
315 S. Lowry Street, Smyrna, TN 37167
(615)355-5711 fax: (615)355-5799

SMYRNA GAS SYSTEM
4 METER MANIFOLD

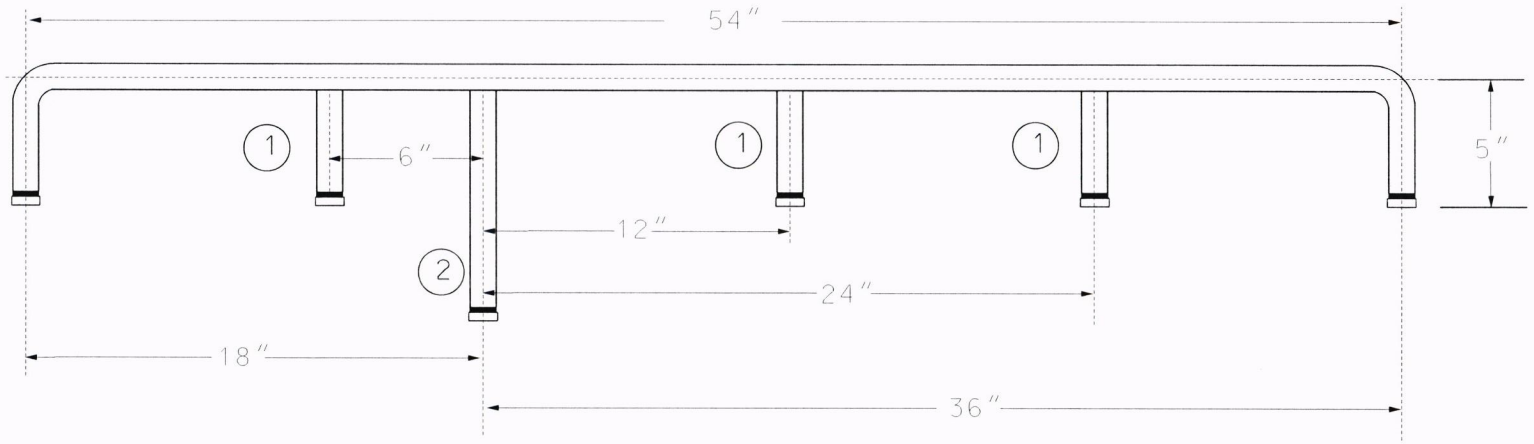

NOTES:

1. GRAY EPOXY
2. TEST 100# FOR 10 SEC.
4. 1″ SCH 40 PIPE

ITEM	QUAN	DESCRIPTION
1	3	1″ NIPPLE, 4 1/2″ LONG
2	1	1″ NIPPLE, 9″ LONG

TOWN OF SMYRNA
315 S. Lowry Street,Smyrna, TN 37167
(615)355-5711 fax: (615)355-5799

SMYRNA GAS SYSTEM
5 METER MANIFOLD

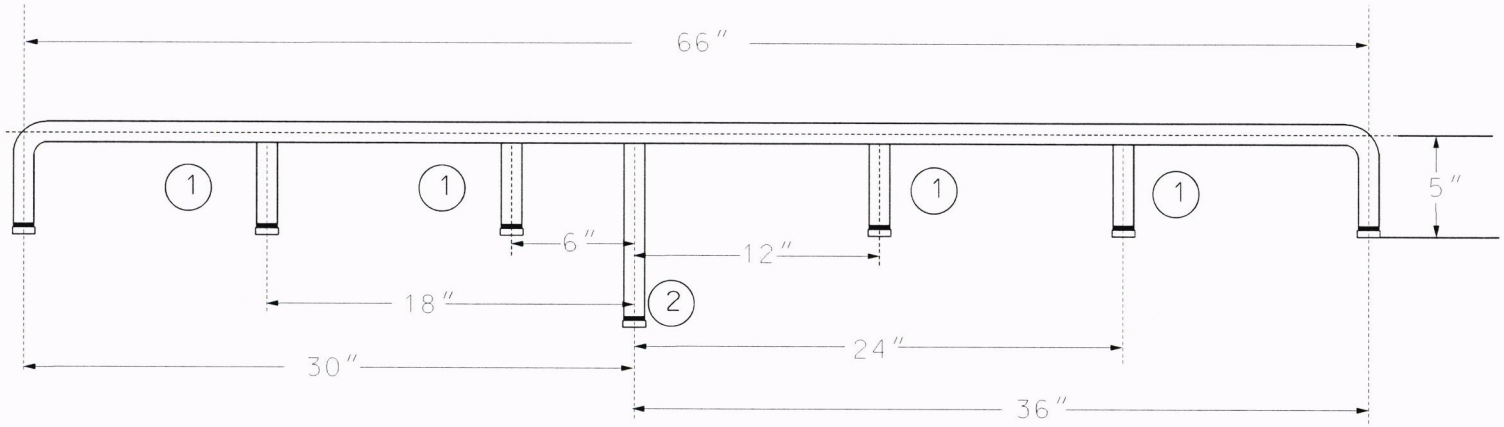

NOTES:

1. GRAY EPOXY
2. TEST 100# FOR 10 SEC.
4. 1″ SCH 40 PIPE

ITEM	QUAN	DESCRIPTION
1	4	1″ NIPPLE, 4½″ LONG
2	1	1″ NIPPLE, 9″ LONG

TOWN OF SMYRNA
315 S. Lowry Street,Smyrna, TN 37167
(615)355-5711 fax: (615)355-5799

SMYRNA GAS SYSTEM
6 METER MANIFOLD

ITEM	QUAN	DESCRIPTION
1	3	2" WELD END. RP. VALVE ANSI 150
2	2	2" FLANGE. WELD END. FF. ANSI 150
3	3	2" WELD TEE
4	3	2" 90 ELL
5	1	2" T STRAINER. ANSI 150
6	2	1/2" THREAD-O-LET w/ 1/2" NIPPLE. 1/2" VALVE AND 1/2" PLUG
7	1	2" CAP. THREADED
8	3	2" NIPPLE. 4" LONG
9	1	3/4"x1/2"x4" SCH 40 SWAGED TBE NIPPLE
10	1	1/2" LOCKING BALL VALVE
11	1	1/2" SQUARE HEAD PLUG

TOWN OF SMYRNA
315 S. Lowry Street
Smyrna, TN 37167
(615)355-5711
fax: (615)355-5799

SMYRNA GAS SYSTEM
3.5M RABO METER SET

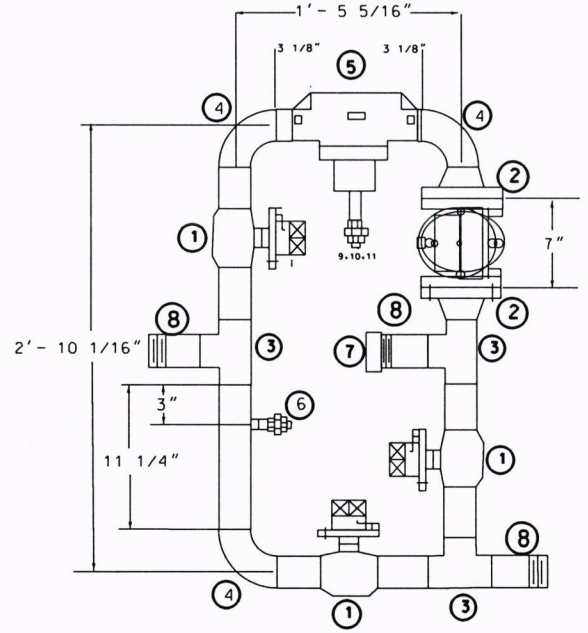

NOTES:
1. GRAY EPOXY
2. TEST 100# FOR 10 SEC.
3. ASSEMBLE AND SHIP

ITEM	QUAN	DESCRIPTION
1	3	2" WELD END, RP, VALVE ANSI 150
2	2	3" FLANGE, WELD END, FF, ANSI 150
3	3	2" WELD TEE
4	2	2" 90 ELL
5	1	3" x 2" 90 ELL REDUCING
6	1	3" x 2" REDUCER
7	1	2" T STRAINER
8	2	1/2" THREAD-O-LET w/ 1/2" NIPPLE, 1/2" VALVE AND 1/2" PLUG
9	1	2" CAP, THREADED
10	3	2" NIPPLE, 4" LONG
11	1	$\frac{3}{4}$"X$\frac{1}{2}$"X4" SCH 40 TBE NIPPLE
12	1	$\frac{1}{2}$" LOCKING BALL VALVE
13	1	$\frac{1}{2}$" SQUARE HEAD PLUG

TOWN OF SMYRNA
315 S. Lowry Street
Smyrna, TN 37167
(615)355-5711
fax: (615)355-5799

SMYRNA GAS SYSTEM
5.5M RABO METER SET

NOTES:

1. GRAY EPOXY
2. TEST 100 psig FOR 10 SEC.
3. ASSEMBLE AND SHIP

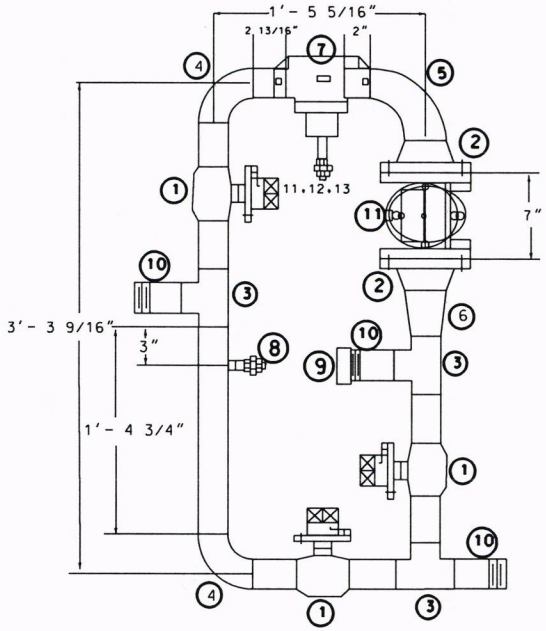

ITEM	QUAN	DESCRIPTION
1	3	2" WELD VALVE.150# REDUCED PORT
2	1	2" T STRAINER
3	1	1" THREAD O LET
4	2	1"x3" SCH 40 TBE NIPPLE
5	1	1" LOCKWING BALL VALVE
6	1	1" SQUARE HEAD PLUG
7	1	1/4" THREAD O LET
8	1	1/4"x3" SCH 40 TBE NIPPLE
9	1	1/4" NEEDLE VALVE
10	1	1/4" SQUARE HEAD PLUG
11	1	3/4"x1/2"x4" SCH 40 SWAGED TBE NIPPLE
12	1	1/2" LOCKWING BALL VALVE
13	1	1/2" SQUARE HEAD PLUG
14	2	3"x2" SLIP ON FLAT FACE FLANGE.150# (9M W/4 BOLTS)
15	3	2" WELD TEE
16	3	2" WELD ELL
17	1	2" THREADED CAP
18	3	2"x3" SCH 40 TOE NIPPLE
19	2	2"x15 1/4" SCH 40 PIPE
20	1	2"x5 1/2" SCH 40 PIPE
21	1	2"X6 1/4"SCH 40 PIPE
22	1	2"x2 3/16" SCH 40 PIPE

TOWN OF SMYRNA
315 S. Lowry Street
Smyrna, TN 37167
(615)355-5711
fax: (615)355-5799

SMYRNA GAS SYSTEM
9M RABO METER SET

NOTES:

1. GRAY EPOXY
2. TEST 100 psig FOR 10 SEC.
3. ASSEMBLE AND SHIP

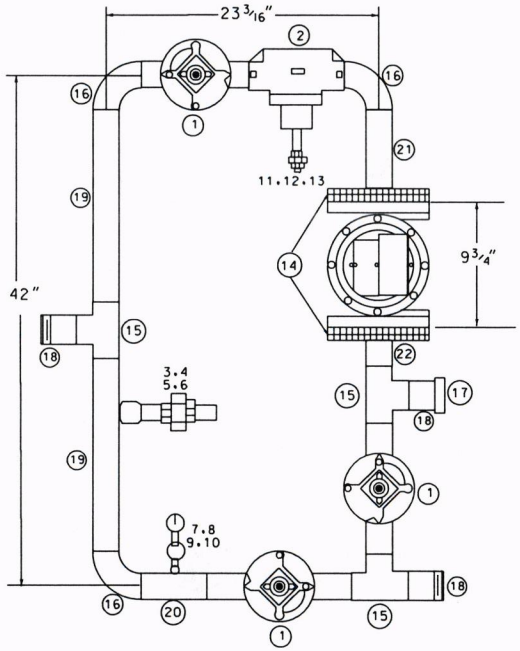

ITEM	QUAN	DESCRIPTION
1	3	2" WELD VALVE.150# REDUCED PORT
2	1	2" T STRAINER
3	1	1" THREAD O LET
4	2	1"x3" SCH 40 TBE NIPPLE
5	1	1" LOCKWING BALL VALVE
6	1	1" SQUARE HEAD PLUG
7	1	1/4" THREAD O LET
8	1	1/4"x3" SCH 40 TBE NIPPLE
9	1	1/4" NEEDLE VALVE
10	1	1/4" SQUARE HEAD PLUG
11	1	3/4"x1/2"x4" SCH 40 SWAGED TBE NIPPLE
12	1	1/2" LOCKWING BALL VALVE
13	1	1/2" SQUARE HEAD PLUG
14	2	4"x2" SLIP ON FLAT FACE FLANGE.150# (14M W/8 BOLTS)
15	3	2" WELD TEE
16	3	2" WELD ELL
17	1	2" THREADED CAP
18	3	2"x3" SCH 40 TOE NIPPLE
19	2	2"x15 1/4" SCH 40 PIPE
20	1	2"x5 1/2" SCH 40 PIPE
21	1	2"X6 1/4" SCH 40 PIPE
22	1	2"x2 5/16" SCH 40 PIPE

TOWN OF SMYRNA
315 S. Lowry Street
Smyrna, TN 37167
(615)355-5711
fax: (615)355-5799

SMYRNA GAS SYSTEM
14M RABO METER SET

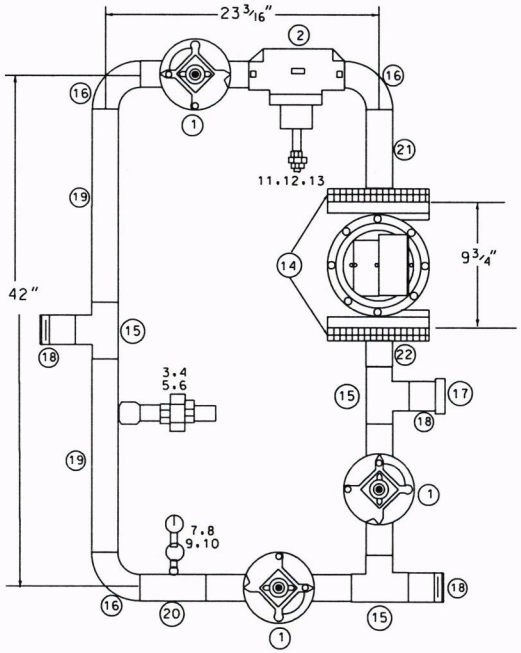

NOTES:

1. GRAY EPOXY
2. TEST 100 psig FOR 10 SEC.
3. ASSEMBLE AND SHIP

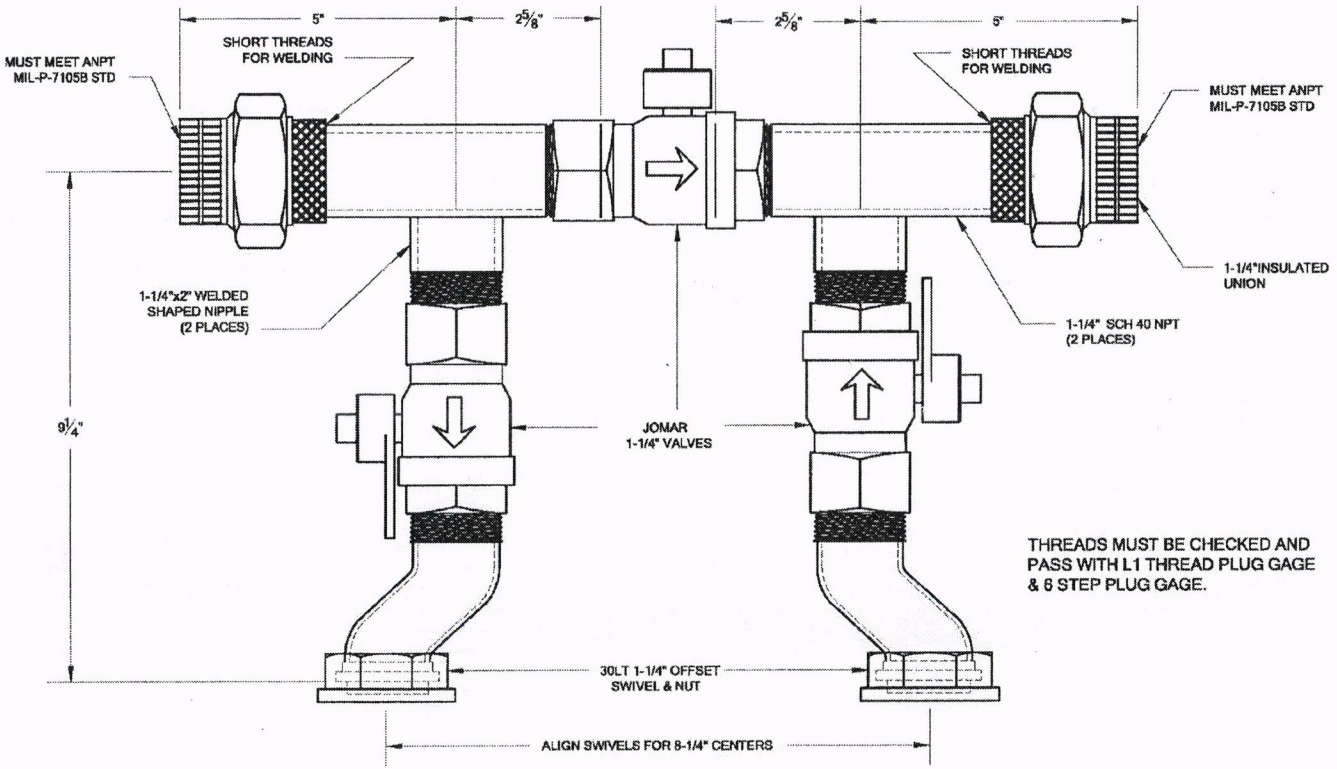

NOTES:

1. GRAY EPOXY
2. TEST 100# FOR 10 SEC.
3. ASSEMBLE AND SHIP

TOWN OF SMYRNA
315 S. Lowry Street, Smyrna, TN 37167
(615)355-5711 fax: (615)355-5799

SMYRNA GAS SYSTEM
425 WITH BYPASS

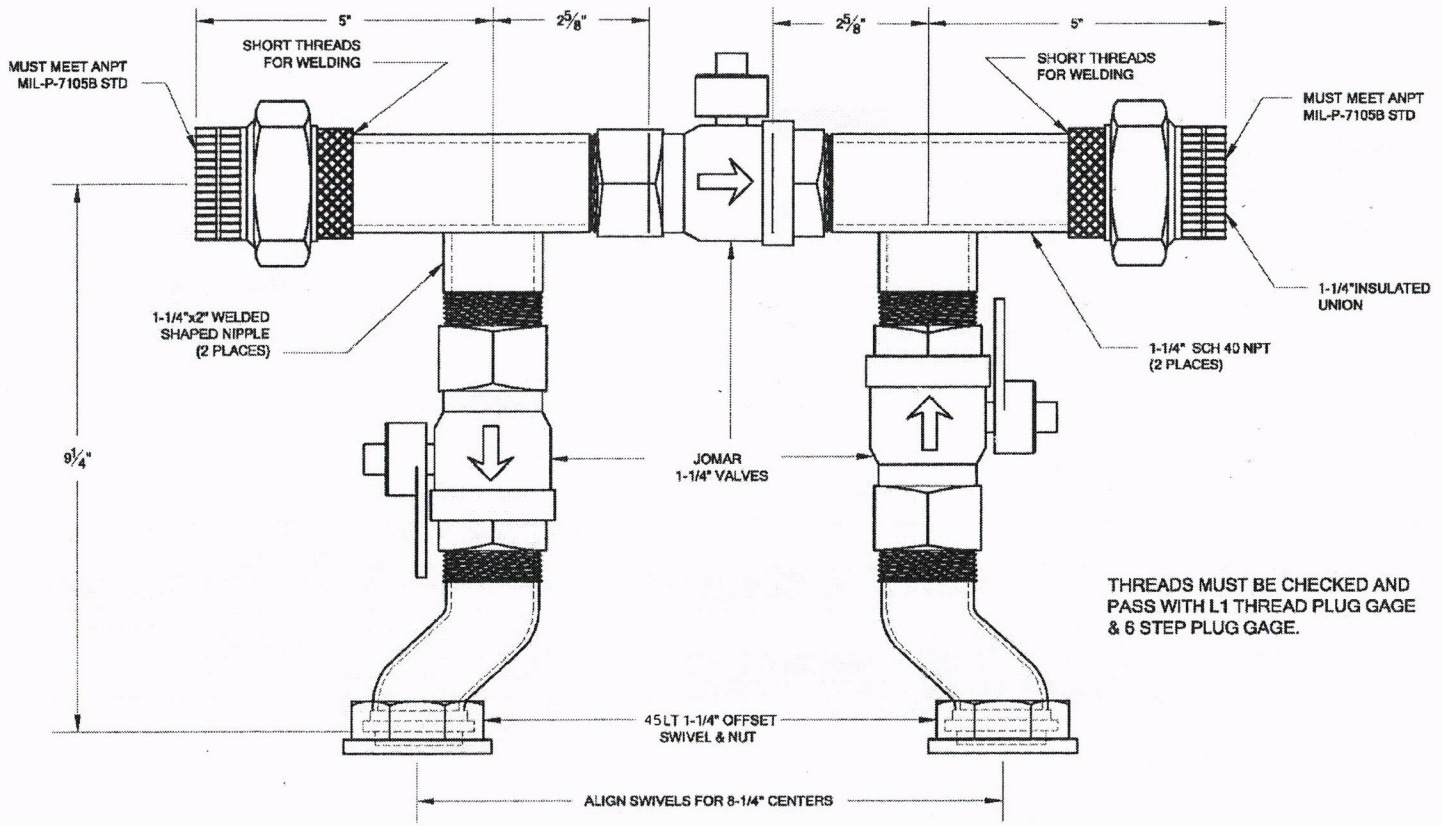

THREADS MUST BE CHECKED AND PASS WITH L1 THREAD PLUG GAGE & 6 STEP PLUG GAGE.

NOTES:

1. GRAY EPOXY
2. TEST 100# FOR 10 SEC.
3. ASSEMBLE AND SHIP

TOWN OF SMYRNA
315 S. Lowry Street. Smyrna, TN 37167
(615)355-5711 fax: (615)355-5799

SMYRNA GAS SYSTEM
630 WITH BYPASS

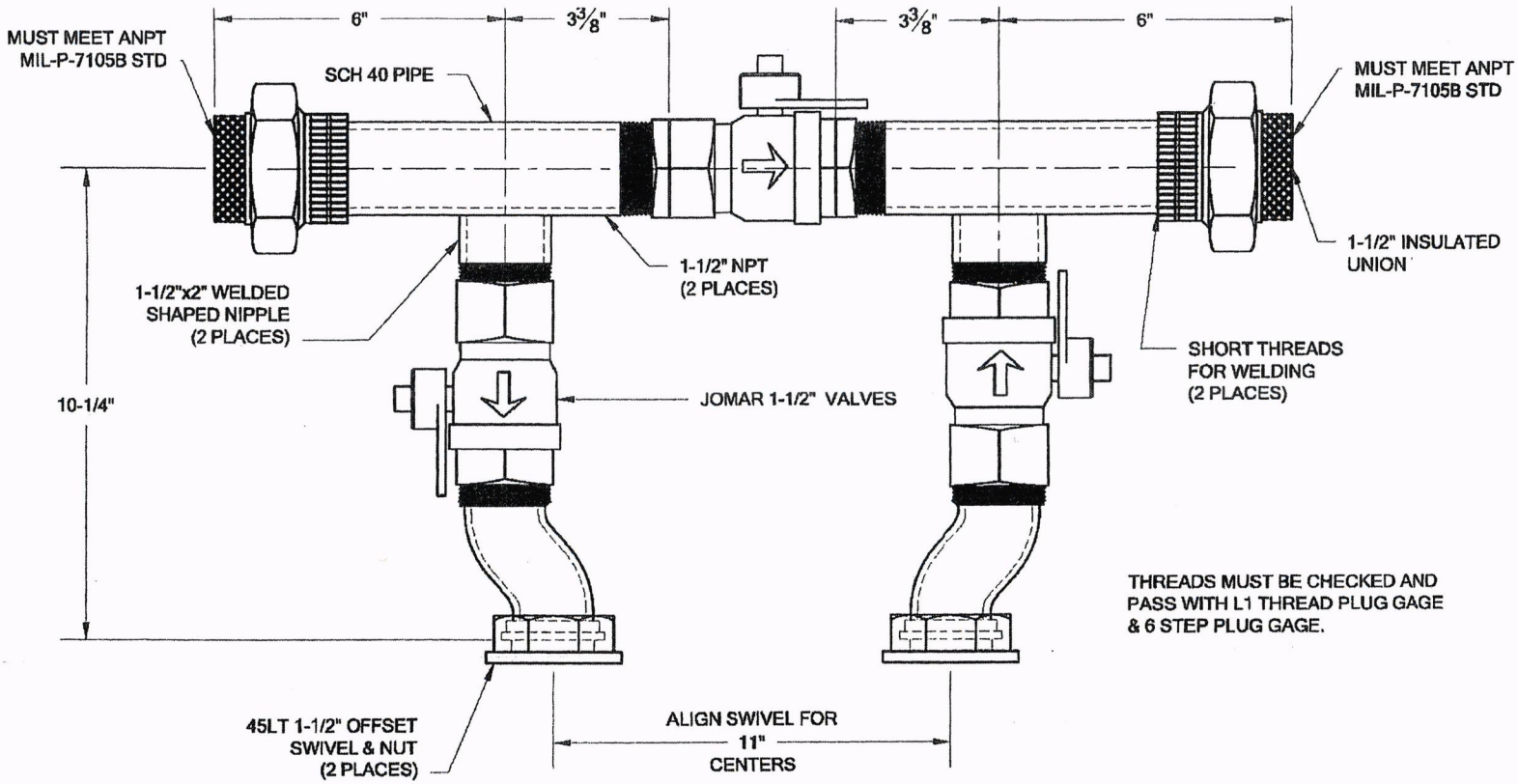

NOTES:

1. GRAY EPOXY
2. TEST 100# FOR 10 SEC.
3. ASSEMBLE AND SHIP

TOWN OF SMYRNA
315 S. Lowry Street, Smyrna, TN 37167
(615)355-5711 fax: (615)355-5799

SMYRNA GAS SYSTEM
800 / 1000 WITH BYPASS

WATER MATERIALS BID LIST 2025-2026

WATER	ITEM #	DESCRIPTION	SIZE	APPROVED PART #	ALTERNATE PART #	UNIT	EST. QTY. FY 26/27	BIDDER	UNIT PRICE	ESTIMATED DELIVERY TIME
		METER YOKES/ACCESSORIES								
W	1	METER RETROSETTER W/ 360° LOCKWING & DC; MUELLER (FORD ALTERNATE)	5/8" X 3/4"	203B2446-R5---N	RETRO-2CVBRHH-NL	EA	10			
W	2	METER RISER; RELOCATOR W/ 360° LOCKWING & DC; MUELLER (FORD ALTERNATE)	5/8" X 3/4" X 7"	234B24118R5---N	VBHH42-7WR-NL	EA	200			
W	3	METER RISER; RELOCATOR W/ 360° LOCKWING & DC; MUELLER (FORD ALTERNATE)	5/8" X 3/4" X 12"	238B24118R5---N	VBHH42-12-NL	EA	10			
W	4	METER RISER RELOCATOR W/ 360° LOCKWING & DC; MUELLER (FORD ALTERNATE)	1" X 10"	389B24118R5---N	VBHH44-10-NL	EA	80			
W	5	METER RISER; RELOCATOR W/ 360° LOCKWING & DC; MUELLER (FORD ALTERNATE)	1.5" X 14"	063B2424--5N	VBRHH46-14-NL	EA	5			
W	6	METER RISER; RELOCATOR W/ 360° LOCKWING & DC; MUELLER (FORD ALTERNATE)	2" X 14"	087B2424--5N	VBRHH47-14-NL	EA	10			
W	7	METER RISER; RELOCATOR W/360° LOCKWING & DC; FORD W/BYPASS	2" X 14"	1-VBHH47-14B-NL	n/a	EA	2			
W	9	METER SWIVEL 2.5L; FORD	5/8" X 3/4" X 3/4"x 2.5" LONG	C38-23-2.5-NL	MUELLER H-10890N	EA	200			
W	10	METER SWIVEL COUPLING ; FORD	5/8" x 3/4" x 3/4" x 2.25" LONG	C38-23-2.25-NL	MUELLER H-10890026	EA	5			
W	11	METER SWIVEL COUPLING STRAIGHT; FORD	1"	C38-44-2-625-NL	MUELLER H-10890	EA	80			
W	12	FLANGE PAK FOR METER - BRASS (BOX W/2)	1.5"	4415FSC	or equal	EA	8			
W	13	FLANGE PAK FOR METER - BRASS (BOX W/ 2)	2"	4420FSC	or equal	EA	10			
W	14	A-24 METER ADAPTOR; FORD	5/8" x 3/4" to 1"	A24-NL	or equal	EA	120			
W	15	A-47 FLANGED METER ADAPTOR; FORD (BOX W/ 2)	1" TO 2"	A47-NL	or equal	EA	5			
W	16	A-67 FLANGED METER ADAPTOR; FORD (BOX W/2)	1.5" TO 2"	A67-NL	or equal	EA	5			

WATER	ITEM #	DESCRIPTION	SIZE	APPROVED PART #	ALTERNATE PART #	UNIT	EST. QTY. FY 26/27	BIDDER	UNIT PRICE	ESTIMATED DELIVERY TIME
		WATER REGULATORS								
W	17	REGULATOR; WATTS	3/4"	LF25AUB-Z3		EA	4			
W	18	REGULATOR; WATTS	1"	1LF25AUB-Z3		EA	4			
W	19	REGULATOR; ZURN WILKINS	3/4"	MODEL 70XL		EA	2			

WATER	ITEM #	DESCRIPTION	SIZE	APPROVED PART #	ALTERNATE PART #	UNIT	EST. QTY. FY 26/27	BIDDER	UNIT PRICE	ESTIMATED DELIVERY TIME
		WATER MOUDLE								
W	21	ITRON UNIVERSAL MOUDLE W/ LID MOUNTING KIT	UNIVERSAL	ERW-1350-001 100W+/CFG-1601-001	n/a	EA	275	**United Systems**	$125.00	12 Weeks
W	22	ITRON UNIVERSAL LEAK SENSOR	UNIVERSAL	LDS-1601-001	n/a	EA	10	**United Systems**	$180.00	12 Weeks
W	23	CELLULAR 500W MODULE W/ LID MOUNTING KIT	UNIVERSAL	ECW-1700-001/CFG-1601-001	n/a	EA	100	**United Systems**	$142.00	24 Weeks

WATER	ITEM #	DESCRIPTION	SIZE	APPROVED PART #	ALTERNATE PART #	UNIT	EST. QTY. FY 26/27	BIDDER	UNIT PRICE	ESTIMATED DELIVERY TIME
		METERS AND PARTS								
W	24	METER CIB/HRE/USG W/ ITRON CONNECTOR; BADGER	5/8" X 3/4"	MODEL 25LL (NSF 61-G MTR)	n/a	EA	200			
W	25	METER CIB/HRE/USG W/ ITRON CONNECTOR; BADGER	1"	MODEL 70 LL (NSF 61-G MTR)	n/a	EA	80			
W	26	METER CIB/HRE/USG W/ ITRON CONNECTOR; BADGER	1.5	MODEL 120 LL (NSF 61-G-MTR)	n/a	EA	4			
W	27	METER ELLIPTICALW/T. PLUG HRE/USG W/ ITRON CONNECTOR W/ D. P.; BADGER	2"	MODEL 170 LL (NSF 61- G-MTR)	n/a	EA	6			
W	28	METER BOTTOMS FOR BADGER METER; BADGER	5/8" X 3/4"	57799 - 001	n/a	EA	25			
W	29	METER BOTTOMS FOR BADGER METER	1"	59293 - 002	n/a	EA	10			
W	37	CHAMBER for M70 BADGER METER	1"	33334-032	n/a	EA	5			
W	38	CHAMBER for M120 BADGER METER	1.5"	33334-017	n/a	EA	5			
W	39	CHAMBER forM170 BADGER METER	2"	33334-028	n/a	EA	5			
W	40	RETROFIT REGISTER w/ ITRON CONNECTOR; BADGER	5/8" X 3/4"	M25/RETRO/RT	n/a	EA	400			
W	41	RETROFIT REGISTER w/ ITRON CONNECTOR; BADGER	1"	M70/RETRO/RT	n/a	EA	6			
W	42	RETROFIT REGISTER w/ ITRON CONNECTOR; BADGER	1.5"	M120/RETRO/RT	n/a	EA	2			
W	43	RETROFIT REGISTER w/ ITRON CONNECTOR; BADGER	2"	M170/RETRO/RT	n/a	EA	4			

WATER	ITEM #	DESCRIPTION	SIZE	APPROVED PART #	ALTERNATE PART #	UNIT	EST. QTY. FY 26/27	BIDDER	UNIT PRICE	ESTIMATED DELIVERY TIME
		ULTRASONIC METERS AND PARTS								
W	44	NEPTUNE METER W/ 5' ITRON CONNECTOR in 100 USG	2" x 17"	EU2E1G1SG61		EA	4			
W	45	NEPTUNE METER W/ 25' ITRON CONNECTOR in 100 USG W/ FLANGE PAKS	3"X 12"	EU3A1G1SG61		EA	2			
W	46	NEPTUNE METER W/ 25' ITRON CONNECTOR in 100 USG W/ FLANGE PAKS	4" X 14"	EU3C1G1SG61		EA	2			
W	47	NEPTUNE METER W/ 25' ITRON CONNECTOR in 100 USG W/ FLANGE PAKS	6" X 18"	EU3E1G1SG61		EA	3			

WATER	ITEM #	DESCRIPTION	SIZE	APPROVED PART #	ALTERNATE PART #	UNIT	EST. QTY. FY 26/27	BIDDER	UNIT PRICE	ESTIMATED DELIVERY TIME
		METER BOXES AND LIDS								
W	48	SIGMA RMB-132418-SW W/ LC1324T-D READ DOOR AND RECESS TOUCH READ HOLE	5/8" x 3/4" meters	RMB- 132418-SW	OLD CASTLE 1324X18 /DI65-45-12	EA	50			
W	49	SIGMA RMB-173018-SW W/ LC1730T-D READ DOOR AND RECESS TOUCH READ HOLE	1" - 2" meters	RMB- 173018-SW	OLD CASTLE 1730X18/DI65-45-12	EA	25			
W	50	SIGMA LID ONLY LC1324T-D READ DOOR AND RECESS TOUCH READ HOLE	5/8" x 3/4" meters	RMB-1324-L-RT	TRI CAST LID DI 6545-12 W/ READ DOOR /TRANS HOLE1324	EA	10			
W	51	SIGMA LID ONLY LC1730T-D READ DOOR AND RECESS TOUCH READ HOLE	1" - 2" meters	RMB-1730-L-RT	TRI CAST LID DI 6545-12 W/ READ DOOR /TRANS HOLE1730	EA	10			
W	55	CI SOLID METER BOX LID W/ ITRON TR HOLE FOR BROOKS 36H15 METER BOX LID ONLY	CI SOLID LID FOR BROOKS 36HI5	LC 223T ITRON	n/a	EA	25			
		***1324 AND 1730 BOXES SHALL COME W/LID READER DOOR AND RECESS TOUCH READ HOLE**		LC1324T-D/1730T-D	Tricast DI w/ read door /trans hole 1324/1730					

WATER	ITEM #	DESCRIPTION	SIZE	APPROVED PART #	ALTERNATE PART #	UNIT	EST. QTY. FY 26/27	BIDDER	UNIT PRICE	ESTIMATED DELIVERY TIME
		VAULTS								
W	56	METER VAULT W/ ALUMINUM LID	2" METER VAULT	SEE DRAWING			2			

WATER MATERIALS BID LIST 2025-2026

WATER	ITEM #	DESCRIPTION	SIZE	APPROVED PART #	ALTERNATE PART #	UNIT	EST. QTY. FY 26/27	BIDDER	UNIT PRICE	ESTIMATED DELIVERY TIME
		BRASS FITTINGS								
W	59	BRASS REDUCTION COUPLING	2" X 1.5"	B-RC0807		EA	2			
W	60	ROUGH BRASS 45° COUPLING	1.5"	BR4L		EA	2			
W	61	ROUGH BRASS 90° COUPLING	1.5"	BR9L		EA	2			
W	64	FEMALE THREAD BALL VALVE; FORD	3/4"	B11-233W-NL		EA	10			
W	65	BRASS TEE	2"x2"x2"	NSF61-4		EA	10			
W	66	BRASS THREADED 90°; MATCO	2"	NSF61-4		EA	10			
W	67	BRASS THREADED STREET 90°; MATCO	2"	NSF61-4		EA	10			
W	68	THREADED COUPLING; MATCO	2"	NSF61-4		EA	10			
W	69	BRASS ALL-THREAD	1.5"			EA	2			
W	70	BRASS NIPPLE	1.5" X 6"	BRNLU		EA	2			
W	71	BRASS ALL THREAD; MATCO--NORCA	2"	NBR08CL		EA	20			
W	72	BRASS NIPPLE; MATCO-NORCA	2" X 6" LONG	NBR086		EA	10			
W	73	BRASS NIPPLE; BMI	2" X 12" LONG	7 77701049941		EA	10			
W	74	BRASS NIPPLE	2" X 18" LONG			EA	6			
W	75	BRASS NIPPLE	2" X 24" LONG			EA	6			
W	76	CHECK VALVE; RED & WHITE	1.5"	236AB 1 1/2		EA	4			
W	77	CHECK VALVE; RED & WHITE	2"	236AB 2		EA	4			
W	78	APOLLO BALL VALVE	2"	A94ALF10801A		EA	6			

WATER	ITEM #	DESCRIPTION	SIZE	APPROVED PART #	ALTERNATE PART #	UNIT	EST. QTY. FY 26/27	BIDDER	UNIT PRICE	ESTIMATED DELIVERY TIME
		COMPRESSION FITTINGS								
W	82	COUPLING; FMLIP; FORD	FMLIP 3/4" X 3/4" CTS	C14-33-Q-NL		EA	5			
W	83	COUPLING; FORD	3/4" CTS X 3/4" CTS	C44-33-Q-NL		EA	30			
W	84	COUPLING; FORD	3/4" CTS PAK X 3/4" IP MALE	C84-33-Q-NL		EA	5			
W	85	COUPLING; FORD	3/4" CTS PACK X 1" CTS PACK	C44-34-Q-NL		EA	30			
W	86	COUPLING; FMLIP; FORD	FMLIP 1" X 1" CTS	C14-44-Q-NL		EA	15			
W	87	COUPLING; FORD	1" CTS X 1" CTS	C44-44-Q-NL		EA	25			
W	88	COUPLING; FORD	1" CTS X 1" I.P. MALE	C84-44-Q-NL		EA	6			
W	89	COUPLING; FORD	2" CTS X 2" CTS JOINT PK	C44-77-Q-NL		EA	6			
W	90	2" CTS X 2" IRON PIPE THREAD; FORD	2" CTS X 2" IRON PIPE THREAD	C84-77-Q-NL		EA	6			
W	91	COUPLING; T'S ; FORD	3/4" X 3/4" X 3/4" CTS	T444-333-Q-NL		EA	20			
W	92	COUPLING; T'S ; FORD	3/4" X 3/4" X 1" CTS	T444-443-Q-NL		EA	10			
W	93	COUPLING; T'S; FORD	1" X 1" X 3/4"	T444-443-AWT-Q-NL		EA	5			
W	94	COUPLING; T'S; FORD	1" X 1" X 1" CTS PAK JOINT	T444-444-Q-NL		EA	5			
W	95	BALL VALVE; FORD	3/4"	B44-233W-Q-NL		EA	20			
W	96	BALL VALVE; FORD	1"	B44-344W-Q-NL		EA	20			
W	97	COUPLING; "Y"; FORD	3/4" X 3/4" X 1" CTS	Y44-243-Q-NL		EA	25			
W	98	90° COUPLING; FORD	3/4"	L44-33-Q-NL		EA	5			
W	99	90° COUPLING; FORD	1"	L44-44-Q-NL		EA	5			
W	100	Q -NUT ASSEMBLY	3/4"	QJN4-3		EA	20			
W	101	Q-NUT ASSEMBLY	1"	QJN4-4		EA	20			
W	102	FEMALE COPPER THREAD GRIP JOINT; FORD	3/4" X 3/4" CTS	C04-33-Q-NL		EA	5			
W	103	FEMALE COPPER THREAD GRIP JOINT; FORD	1" X 1" CTS	C04-44-Q-NL		EA	5			
W	104	PAK J ASSEMBLY; FORD	1" FEMALE X 3/4" CTS	C08-43-NL		EA	5			
W	105	COUPLING SWIVEL 45 DEGREE; FORD	3/4"X3/4"	LA04-33S-Q-NL		EA	5			
W	106	COUPLING SWIVEL 45 DEGREE; FORD	1"X1"	LAO4-44S-Q-NL		EA	5			
W	107	COUPLING SWIVEL 90 DEGREE; FORD	3/4"X3/4"	L04-33S-Q-NL		EA	5			
W	108	COUPLING SWIVEL 90 DEGREE; FORD	1"X1"	L04-44S-Q-NL		EA	5			
W	109	MULTI SERVICE Y NL 1-2" FMLIP X 4-1" FMLIP	2"X1"	Y11-474-NL		EA	5			

WATER	ITEM #	DESCRIPTION	SIZE	APPROVED PART #	ALTERNATE PART #	UNIT	EST. QTY. FY 26/27	BIDDER	UNIT PRICE	ESTIMATED DELIVERY TIME
		CURB STOPS								
W	113	CURB STOP W/360 DEGREE LOCKING WINGNUT; FORD	3/4"	B43-232WR-Q-NL		EA	200			
W	114	CURB STOP W/360 DEGREE LOCKING WINGNUT; FORD	1"	B43-344WR-Q-NL		EA	25			
W	115	BALL VALVE PAD WING/CURB STOP; FORD	1.5"	BF13-666W-NL		EA	4			
W	116	BALL VALVE PAD WING/CURB STOP; FORD	2"	BF13-777W-NL		EA	4			
W	117	BALL VALVE PAD WING W/COMPRESSION FITTING; FORD	2"	BF43-777W-Q-NL		EA	6			

WATER	ITEM #	DESCRIPTION	SIZE	APPROVED PART #	ALTERNATE PART #	UNIT	EST. QTY. FY 26/27	BIDDER	UNIT PRICE	ESTIMATED DELIVERY TIME
		CORP STOPS								
W	122	CORPORATION STOP; FORD	3/4" TAPER X 3/4" CTS	FB1000-3-Q-NL		EA	10			
W	123	CORPORATION STOP; FORD	1" CC TAPER x 1"CTS	FB1000-4-Q-NL		EA	20			
W	124	CORPORATION STOP, IRON PIPE THREADS; FORD	1" IP THREAD X1" CTS	FB1100-4-Q-NL		EA	5			

WATER	ITEM #	DESCRIPTION	SIZE	APPROVED PART #	ALTERNATE PART #	UNIT	EST. QTY. FY 26/27	BIDDER	UNIT PRICE	ESTIMATED DELIVERY TIME
		TAPPING SADDLES								
W	143	TAPPING SADDLE; SMITH BLAIR	2" X 3/4" (2.35-2.56)	315-00025607-000		EA	5			
W	144	TAPPING SADDLE; SMITH BLAIR	2" X 1" (2.35-2.56)	315-00025609-000		EA	4			
W	145	TAPPING SADDLE; SMITH BLAIR	2-1/4" X 3/4" (2.44-2.91)	315-00029107-000		EA	5			
W	146	TAPPING SADDLE; SMITH BLAIR	2-1/4" X 1" (2.44-2.91)	315-00029109-000		EA	5			
W	149	TAPPING SADDLE; SMITH BLAIR	4" X 3/4" (4.40-4.80)	315-00048007-000		EA	4			

GAS METER BID LIST 2025-2026

GAS	ITEM #	DESCRIPTION	SIZE	APPROVED PART #	ALTERNATE PART #	UNIT	EST QTY FY 26/27	BIDDER	UNIT PRICE	ESTIMATED DELIVERY TIME
		METER BARS								
G	44	1" METER BARS 20LT AC-250 METERS	1" 20 LT	SEE DRAWING	N/A	EA	250			
G	45	1.25 " METER BARS 30LT AL-425 METERS	1.25" 30LT	SEE DRAWING	N/A	EA	150			
G	50	METER BAR - METER BYPASS FOR AL-800 OR AL-1000 - 45 LT	45LT	SEE DRAWING	N/A	EA	4			
G	51	METER BAR - METER BYPASS FOR AC-630 - 45 LT	45LT	SEE DRAWING	N/A	EA	2			
G	52	METER BAR - METER BYPASS FOR AL-425 - 30 LT	30LT	SEE DRAWING	N/A	EA	2			

GAS	ITEM #	DESCRIPTION	SIZE	APPROVED PART #	ALTERNATE PART #	UNIT	EST QTY FY 26/27	BIDDER	UNIT PRICE	ESTIMATED DELIVERY TIME
		METER MANIFOLDS								
G	54	METER BAR - TWO METER MANIFOLD;		SEE DRAWING	N/A	EA	1			
G	55	METER BAR - THREE METER MANIFOLD;		SEE DRAWING	N/A	EA	1			
G	56	METER BAR - FOUR METER MANIFOLD;		SEE DRAWING	N/A	EA	1			
G	57	METER BAR - FIVE METER MANIFOLD;		SEE DRAWING	N/A	EA	1			
G	58	METER BAR - SIX METER MANIFOLD;		SEE DRAWING	N/A	EA	1			

GAS	ITEM #	DESCRIPTION	SIZE	APPROVED PART #	ALTERNATE PART #	UNIT	EST QTY FY 26/27	BIDDER	UNIT PRICE	ESTIMATED DELIVERY TIME
		RESIDENTIAL REGULATORS								
G	63	REGULATOR; SENSUS/AMERCIAN	3/4" X 1"	1813C	143-80-2	EA	200			
G	64	REGULATOR; SENSUS/AMERICAN	1" x 1"	1813C	143-80-2	EA	50			

GAS	ITEM #	DESCRIPTION	SIZE	APPROVED PART #	ALTERNATE PART #	UNIT	EST QTY FY 26/27	BIDDER	UNIT PRICE	ESTIMATED DELIVERY TIME
		COMMERCIAL REGULATORS								
G	68	REGULATOR; FISHER	2"	299H		EA	5			
G	69	REGULATOR; FISHER	2"	CS 400		EA	4			
G	71	REGULATOR;FISHER HIGH CAP RELEIF 2.5"VENT	2"	CS820-IQ		EA	4			

GAS	ITEM #	DESCRIPTION	SIZE	APPROVED PART #	ALTERNATE PART #	UNIT	EST QTY FY 26/27	BIDDER	UNIT PRICE	ESTIMATED DELIVERY TIME
		FARM TAP REGULATORS/RELIEFS								
G	75	REGULATOR, FARM TAP; FISHER/BELGAS	3/4"	627R-101	R62706020002010	EA	1			
G	76	REGULATOR; RELIEF; FISHER/BELGAS	1"	289H-49	P28908050000000	EA	1			

GAS	ITEM #	DESCRIPTION	SIZE	APPROVED PART #	ALTERNATE PART #	UNIT	EST QTY FY 26/27	BIDDER	UNIT PRICE	ESTIMATED DELIVERY TIME
		ITRON MODULES								
G	81	ITRON MODULE FOR TOP MOUNT METERS		ERG-5006-007/008		EA	20	United Systems	$180.00	12 Weeks
G	82	ITRON MODULE FOR AC 250-630 ,AL 425		ERG-5006-001		EA	250	United Systems	$98.00	12 Weeks
G	83	ITRON MODULE SENSUS 275		ERG-5006-002		EA	250	United Systems	$98.00	12 Weeks
G	84	ITRON MODULE SENSUS 415		ERG-5006-004		EA	150	United Systems	$98.00	12 Weeks
G	85	ITRON MODULE FOR REMOTE MOUNT METERS W/ TCI		ERG-5006-502/503/505		EA	20	United Systems	$180.00	12 Weeks

GAS METER BID LIST 2025-2026

GAS	ITEM #	DESCRIPTION	SIZE	APPROVED PART #	ALTERNATE PART #	UNIT	EST QTY FY 26/27	BIDDER	UNIT PRICE	ESTIMATED DELIVERY TIME
		PREFABRICATED GAS ROTARY METER SETS								
G	7	METER SET; 3.5M ROTARY METER SET - WITHOUT METER/EVC	3.5M/3M	SEE DRAWING	N/A	EA	6			
G	8	METER SET; 5.5M ROTARY METER SET - WITHOUT METER/EVC	5.5M/5M	SEEDRAWING	N/A	EA	2			
G	9	METER SET; 9 M ROTARY METER SET - WITHOUT METER/EVC	9M/7M	SEE DRAWING	N/A	EA	2			
G	10	METER SET; 14 M ROTARY METER SET - WITHOUT METER/EVC	14M/11-16M	SEE DRAWING	N/A	EA	3			

GAS	ITEM #	DESCRIPTION	SIZE	APPROVED PART #	ALTERNATE PART #	UNIT	EST QTY FY 26/27	BIDDER	UNIT PRICE	ESTIMATED DELIVERY TIME
		DIAPHRAM GAS METERS								
G	15	METERS, AC 250 TC; ELSTER/AMERICAN - 5# CASE, 4 DIGIT ODM. INDEX; 20LT	AC 250	AC 250 TC 6" C-C	SENSUS R-275 TC 6" C-C	EA	250			
G	16	METERS, AL 425 TC; ELSTER/AMERICAN - 10# CASE, 4 DIGIT ODM.INDEX; 30LT	AL 425	AL 425 TC 8.25" C-C	SENSUS R-415 TC 8.25" C-C	EA	150			
G	17	METERS, AC 630 TC; ELSTER/AMERICAN - 25# CASE, 4 DIGIT ODM. INDEX; 45 LT	AC 630	AC 630 TC 8.25" C-C	SENSUS SONIX 600 TC 6" C-C	EA	12			
G	18	METERS, AL 800 TC; ELSTER/AMERICAN - 20# CASE, 5 DIGIT ODM. INDEX; 45 LT	AL 800	AL 800 TC 11" C-C	SENSUS SONIX 880 TC 6" C-C	EA	4			
G	19	METERS, AL 1000 TC; ELSTER AMERICAN - 25# CASE, 5 DIGIT ODM. INDEX; 45 LT	AL 1000	AL 1000 TC 11" C-C	N/A	EA	2			

GAS	ITEM #	DESCRIPTION	SIZE	APPROVED PART #	ALTERNATE PART #	UNIT	EST QTY FY 26/27	BIDDER	UNIT PRICE	ESTIMATED DELIVERY TIME
		ROTARY GAS METERS								
G	23	3.5M RABO/ROOTS ROTARY METER,W/TCI INDEX, 5 DIGIT, CCF,THERMO-WELL W/GASKET AND BOLT INTSALL KIT,GASKET STRAINER,FULL FACE,RUBBER W/SS 40 MESH	3.5M/3M	G65/TCIRAB-BD-B1A-FAFA-GA-AA0CACACA-0000-00	B3:3M175 ROOTS	EA	6			
G	24	5.5M RABO/ROOTS ROTARY METER,W/TCI INDEX,5 DIGIT CCF ,THERMO-WELLW/GASKET AND BOLT INSTALL KIT,GASKET STRAINER,FULL FACE,RUBBER W/SS 40 MESH	5.5M/5M	G100/TCIRAB-BD-B1A-FAFA-GA-AA0CACACA-0000-00	B3:5M175 ROOTS	EA	2			
G	25	9 M RABO/ROOTS ROTARY METER, W/TCI INDEX ,5 DIGIT CCF,THERMO-WELL W/GASKET AND BOLT INSTALL KIT,GASKET STRAINER,FULL FACE,RUBBER W/SS 40 MESH	9M/7M	G160/TCIRAB-BD-B1A-FAFA-GA-AA0CACACA-0000-00	B3:7M175 ROOTS	EA	2			
G	26	14 M RABO/ROOTS ROTARY METER,W/TCI INDEX,5 DIGIT CCF ,THERMO-WELL W/ GASKET AND BOLT INSTALL KIT,GASKET STRAINER,FULL FACE,RUBBER W/SS 40 MESH	14M/11M	G250/TCIRAB-BD-B1A-FAFA-GA-AA0CACACA-0000-00	B3:11M175 ROOTS	EA	1			
G	26A	16M RABO/ROOTS ROTARY METER,W/TCI INDEX, 5 DIGIT, CCF,THERMO-WELL W/GASKET AND BOLT INTSALL KIT,GASKET STRAINER,FULL FACE,RUBBER W/SS 40 MESH	16M		B3:16M175 ROOTS	EA	2			
		* ALL ROTARY METERS SHALL COME WITH AMR MOUNTING BRACKET		22-1929						

GAS	ITEM #	DESCRIPTION	SIZE	APPROVED PART #	ALTERNATE PART #	UNIT	EST QTY FY 26/27	BIDDER	UNIT PRICE	ESTIMATED DELIVERY TIME
		TURBINE GAS METERS								
G	27	METER, SENSUS T-18	4"	T-18		EA	1			
G	28	METER, SENSUS AAT -18	4"	AAT-18		EA	1			
G	29	METER, SENSUS AAT - 27	6"	AAT-27		EA	1			
G	30	METER, SENSUS AAT - 57	6"	ATT-57		EA	1			
G	31	METER;SENSUS AAT-60	8"	ATT-60		EA	1			

GAS	ITEM #	DESCRIPTION	SIZE	APPROVED PART #	ALTERNATE PART #	UNIT	EST QTY FY 26/27	BIDDER	UNIT PRICE	ESTIMATED DELIVERY TIME
		ELECTRONIC CORRECTORS								
G	37	HONEYWELL EC-350 CORRECTOR W/10' DRIVE, 0-60PSI PRESSURE & TEMP		EC350-C0B-00200000-A-B15110-A1-MW,N3-200	EAGLE MPII MVC,INDEX.0-102PSI-TEMP#MVC-0047M1	EA	3			
G	38	HONEYWELL EC-350 CORRECTOR W/100' DRIVE, 0-300PSI PRESSURE & TEMP		EC350-E0B-00200000-A-B15110-A1-MW,N3-200	EAGLE MPII MVC,INDEX.0-290PSI-TEMP#MVC-0048M1	EA	1			
G	39	HONEYWELL TC-INDEX, FOR AMCO C-BODY ROTARY METERS		TCIAMC-BD-B1A-FAFA-BA-AA0AEBA0A-0000-00		EA	1			
G	40	HONEYWELL TC-INDEX, FOR ROOTS B3 & ROMET 3000 ROTARY METERS		TCIDB3-BD-B2A-FAFA-BA-AA0AEBA0A-0000-00		EA	1			
G	41	HONEYWELL TC-INDEX, FOR ROOTS B5 & ROMET 5000 ROTARY METERS		TCIRMT-BD-B2A-FAFA-BA-AAOAEBA0A-0000-00		EA	1			
G	42	HONEYWELL TC-INDEX, FOR RABO ROTARY METERS		TCIRAB-BD-B1A-FAFA-GA-AA0CACACA-0000-00		EA	1			
G	43	HONEYWELL TURBO CORRECTOR		TCSCMB-AAAA-AKAB0-OOAOO-A6AAB7-AAAABO-AFAGA-BACOE-OOO-000-OOOOO-C2		EA	1			

W	151	TAPPING SADDLE; SMITH BLAIR	4" X 1" (4.40-4.80)	315-00048009-000		EA	4			
W	155	TAPPING SADDLE; SMITH BLAIR	4" X 2" (4.40-4.80)	315-00048014-000		EA	4			
W	158	TAPPING SADDLE; SMITH BLAIR	6" X 3/4" (6.84-7.60)	315-00076007-000		EA	5			
W	160	TAPPING SADDLE ; SMITH BLAIR	6" X 1" (5.94-6.90)	315-00069009-000		EA	5			
W	161	TAPPING SADDLE; SMITH BLAIR	6" X 1" (6.84-7.60)	315-00076009-000		EA	5			
W	163	TAPPING SADDLE; SMITH BLAIR	6" X 2" (5.94-6.90)	315-00069014-000		EA	5			
W	165	TAPPING SADDLE ; SMITH BLAIR	6"x2" (6.84-7.60)	315-00076014-000		EA	5			
W	166	TAPPING SADDLE ; SMITH BLAIR	8" X 3/4" (8.54-10.10)	315-00101007-000		EA	5			
W	167	TAPPING SADDLE; SMITH BLAIR	8" X 1" (8.54-10.10)	315-00101009-000		EA	4			
W	171	TAPPING SADDLE; SMITH BLAIR	8" X 2" (8.54-10.10)	315-00101014-000		EA	2			
W	175	TAPPING SADDLE; SMITH BLAIR	10" X 2" (10.64-12.12)	315-00121214-00		EA	4			
W	176	TAPPING SADDLE; SMITH BLAIR	12" X 3/4" (12.64-14.32)	315-00143207-000		EA	2			
W	178	TAPPING SADDLE; SMITH BLAIR	12" X 1" (12.62-14.32)	315-00143209-000		EA	2			
W	180	TAPPING SADDLE; SMITH BLAIR	12"-14"X 2" (12.62-14.32)	315-00143214-000		EA	2			
W	181	TAPPING SADDLE; SMITH BLAIR	16"- X 2" (17.25-17.80)	317-00178014-000		EA	2			
W	182	TAPPING SADDLE; SMITH BLAIR	16"- X 2" (17.25-17.80)	317-00195014-000		EA	2			
W	183	TAPPING SADDLE:SMITH BLAIR	20"X2" (21.55-21.65)	317-00216014-000		EA	2			
W	184	TAPPING SADDLE; SMITH BLAIR	24" X 2" (25.75-25.85)	317-00258014-000		EA	2			

WATER	ITEM #	DESCRIPTION	SIZE	APPROVED PART #	ALTERNATE PART #	UNIT	EST. QTY. FY 26/27	BIDDER	UNIT PRICE	ESTIMATED DELIVERY TIME
		REPAIR CLAMPS								
W	188	REPAIR CLAMP; SMITH BLAIR	3/4" X 6" FL CIR			EA	2			
W	189	REPAIR CLAMP; SMITH BLAIR	1" X 6" FL CIR (PVC)	244-00013206-000		EA	2			
W	190	REPAIR CLAMP; SMITH BLAIR	1-1/4" X 6"	244-00016609-000		EA	4			
W	191	REPAIR CLAMP; SMITH BLAIR	1.5" X 6" FL CIR (PVC)	244-00019006-000		EA	4			
W	192	REPAIR CLAMP; SMITH BLAIR	2" X 7" FL CIR (2.35-2.63)	226-00023807-000		EA	8			
W	193	REPAIR CLAMP; SMITH BLAIR	2.5" X 7" FL CIR (2.70-3.00)	226-00027507-000		EA	6			
W	194	REPAIR CLAMP; SMITH BLAIR	2" X 12.5" FL CIR (2.35-2.63)	226-00023812-000		EA	2			
W	195	REPAIR CLAMP; SMITH BLAIR	2.5" X 12" FL CIR (2.70-3.00)	226-00027512-000		EA	2			
W	196	REPAIR CLAMP; SMITH BLAIR	2" X 15" (2.35-2.63)	226-00023815-000		EA	2			
W	197	REPAIR CLAMP; SMITH BLAIR	2" X 25" (2.35-2.63)	226-00023825-000		EA	2			
W	198	REPAIR CLAMP; SMITH BLAIR	2.25" X 25" (2.70-3.00)	226-00027525-000		EA	2			
W	199	REPAIR CLAMP; SMITH BLAIR	3" X 7.5" FL CIR (3.73-4.00)	226-00037507-000		EA	2			
W	200	REPAIR CLAMP; SMITH BLAIR	3" X 12" FL CIR (3.46-3.70)	226-00035012-000		EA	2			
W	201	REPAIR CLAMP; SMITH BLAIR	4" X 7.5" FL CIR (3.96-4.25)	226-00040007-000		EA	2			
W	202	REPAIR CLAMP; SMITH BLAIR	4" X 7.5" FL CIR (4.45-4.73)	226-00045007-000		EA	2			
W	203	REPAIR CLAMP; SMITH BLAIR	4" X 7.5" FL CIR (4.74-5.14)	226-00048007-000		EA	6			
W	204	REPAIR CLAMP; SMITH BLAIR	4 X 12.5" FL CIR (4.74-5.14)	226-00048012-000		EA	2			
W	205	REPAIR CLAMP; SMITH BLAIR	4 X 15" FL CIR (PVC) (4.74-5.14)	226-00048015-000		EA	2			
W	207	REPAIR CLAMP; SMITH BLAIR	6" X 7" FL CIR (6.84-7.24)	226-00069007-000		EA	10			
W	208	REPAIR CLAMP; SMITH BLAIR	6" X 7.5" FL CIR (6.56-6.96)	226-00066307-000		EA	4			
W	210	REPAIR CLAMP; SMITH BLAIR	6" X 12" FL CIR (6.56-6.96)	226-00066312-000		EA	2			
W	211	REPAIR CLAMP; SMITH BLAIR	6" X 12" FL CIR (6.84-7.24)	226-00069012-000		EA	4			
W	212	REPAIR CLAMP; SMITH BLAIR	6" X 12.5" (7.05-7.45)	226-00071012-000		EA	2			
W	213	REPAIR CLAMP; SMITH BLAIR	6" X 15" FL CIR (6.56-6.96)	226-00066315-000		EA	2			
W	214	REPAIR CLAMP; SMITH BLAIR	6" X 15" (6.84-7.24)	226-00069015-000		EA	2			
W	215	REPAIR CLAMP; SMITH BLAIR	6" X 15" (7.05-7.45)	226-00071015-000		EA	2			
W	217	REPAIR CLAMP; SMITH BLAIR	8" X 7" FL CIR (8.54-8.94)	226-00086307-000		EA	4			
W	218	REPAIR CLAMP; SMITH BLAIR	8" X 7" FL CIR (8.99-9.39)	226-00090507-000		EA	8			
W	219	REPAIR CLAMP; SMITH BLAIR	8" X 12" FL CIR (8.99-9.39, DIP)	226-00090512-000		EA	2			
W	220	REPAIR CLAMP; SMITH BLAIR	8" X 15" (8.54-8.94)	226-00086315-000		EA	2			
W	221	REPAIR CLAMP; SMITH BLAIR	8" X 15" (8.99-9.39)	226-00090515-000		EA	2			
W	222	REPAIR CLAMP; SMITH BLAIR	10" X 15" FL CIR (DIP) (11.04-11.44)	226-00111015-000		EA	2			
W	223	REPAIR CLAMP; SMITH BLAIR	10" X 20" (11.04-11.44)	226-00114020-000		EA	2			
W	224	REPAIR CLAMP; SMITH BLAIR	12" X 7" FL CIR (13.10-13.50)	226-00132007-000		EA	2			
W	225	REPAIR CLAMP; SMITH BLAIR	12" X 12" FL CIR (DIP) (13.10-13.50)	226-00132012-000		EA	2			
W	226	REPAIR CLAMP; SMITH BLAIR	12' X 15' FL CIR (DIP) (13.10 - 13.50)	226-00132015-000		EA	2			
W	227	REPAIR CLAMP; SMITH BLAIR	16" X 15" (17.15-17.90)	228-20171515-000		EA	2			
W	229	REPAIR CLAMP; SMITH BLAIR	16" X 20" FL CIR (17.15-17.90)	228-20178220-000		EA	2			
W	230	REPAIR CLAMP; SMITH BLAIR	16" X 30" (17.15-17.90)	228-20171530-000		EA	2			
W	231	REPAIR CLAMP; SMITH BLAIR	18" X 20" FL CIR (19.23-19.98)	228-20192320-000		EA	2			
W	232	REPAIR CLAMP; SMITH BLAIR	20" X 20" (21.52-22.27)	228-20215220-000		EA	2			
W	233	REPAIR CLAMP; SMITH BLAIR	24" X 30" FL CIR (25.70-26.80)	228-30257030-000		EA	2			
W	234	REPAIR CLAMP; SMITH BLAIR	24" X 20" FL CIR (25.70-26.80)	228-30257020-000		EA	2			
W	237	REPAIR CLAMP; SMITH BLAIR W/1" CC TAP	6"X7.5" W/1" TAP (6.84-7.24)	238-00069007-009		EA	2			
W	238	REPAIR CLAMP; SMITH BLAIR W/1" CC TAP	8"X7.5" W/ 1" TAP (8.99-9.39)	238-00090507-009						

WATER	ITEM #	DESCRIPTION	SIZE	APPROVED PART #	ALTERNATE PART #	UNIT	EST. QTY. FY 26/27	BIDDER	UNIT PRICE	ESTIMATED DELIVERY TIME
		HYMAX								
W	240	HYMAX; KRAUSZ	1.5" (1.61-2.13)	860-56-0041-16		EA	4			
W	241	HYMAX; KRAUSZ	2" (2.10-3.03)	860-56-0054-16		EA	4			
W	242	HYMAX; KRAUSZ	3" (3.46-4.33)	860-56-0088-16		EA	4			
W	243	HYMAX; KRAUSZ	4" (4.25-5.63)	860-56-0108-16C		EA	4			
W	244	HYMAX; KRAUSZ	6" (6.42-7.68)	860-56-0163-16		EA	10			
W	245	HYMAX; KRAUSZ	8" (8.54-9.84)	860-56-0217-16		EA	10			
W	246	HYMAX; KRAUSZ	10" (10.70 - 12.00)	860-56-0272-16		EA	2			
W	247	HYMAX; KRAUSZ	12" (12.40-13.66)	860-56-0315-16		EA	2			

WATER MATERIALS BID LIST 2025-2026

WATER	ITEM #	DESCRIPTION	SIZE	APPROVED PART #	ALTERNATE PART #	UNIT	EST. QTY. FY 26/27	BIDDER	UNIT PRICE	ESTIMATED DELIVERY TIME
		PIPE								
W	254	PEX PIPE; REHAU 300 ft. Roll	3/4"	261056-100	n/a	FT	2000			
W	255	PEX PIPE; REHAU 300 ft. roll	1"	261076-300	n/a	FT	4000			
W	256	PEX PIPE; REHAU 300 ft. roll	2"		n/a	FT	300			
W	258	CL-350 DUCTILE IRON WATER PIPE W/ BITUMINOUS SEAL COATING INSIDE & OUTSIDE	3"	CL-350	n/a	FT	60			
W	263	CL-350 DUCTILE IRON WATER PIPE W/ BITUMINOUS SEAL COATING INSIDE & OUTSIDE	12"	CL-350	n/a	FT	40			
W	264	CL-350 DUCTILE IRON WATER PIPE W/ BITUMINOUS SEAL COATING INSIDE & OUTSIDE	16"	CL-350	n/a	FT	40			
W	265	CL-350 DUCTILE IRON WATER PIPE W/ BITUMINOUS SEAL COATING INSIDE & OUTSIDE	18"	CL-350	n/a	FT	40			
W	266	CL-350 DUCTILE IRON WATER PIPE W/ BITUMINOUS SEAL COATING INSIDE & OUTSIDE	24"	CL-350	n/a	FT	40			
W	267	CL-350 DUCTILE IRON WATER PIPE W/ BITUMINOUS SEAL COATING INSIDE & OUTSIDE	36"	CL-350	n/a	FT	40			
W	268	C900 WATER PIPE SDR 14	4"	C-900		FT	100			
W	269	C900 WATER PIPE SDR 14	6"	C-900		FT	200			
W	270	C900 WATER PIPE SDR 14	8"	C-900		FT	200			
W	271	C900 WATER PIPE SDR 14	10"	C-900		FT	40			
W	273	SDR 11, 2" IPS BLACK WATER PIPE	2"	SDR-11		FT	100			

WATER	ITEM #	DESCRIPTION	SIZE	APPROVED PART #	ALTERNATE PART #	UNIT	EST. QTY. FY 26/27	BIDDER	UNIT PRICE	ESTIMATED DELIVERY TIME
		PIPE FITTINGS								
W	277	PIPE STIFFENER (PLASTIC)	3/4"			EA	1000			
W	278	PIPE STIFFENER (PLASTIC)	1"			EA	2000			
W	279	PIPE INSERT; FORD # 55 STAINLESS STELL	2"			EA	14			
W	293	CAP; TYLER	2"			EA	2			
W	294	CAP; TYLER	3"			EA	2			
W	295	CAP; TYLER	4"			EA	2			
W	296	CAP; TYLER	4" X 2"			EA	2			
W	297	CAP; TYLER	6"			EA	2			
W	298	CAP; TYLER	6" X 2"			EA	2			
W	299	CAP; TYLER	8"			EA	2			
W	300	CAP; TYLER	8" X 2"			EA	2			
W	345	ANCHOR COUPLING; TYLER	6" X 13" LONG			EA	6			
W	346	ANCHOR COUPLING; TYLER	6" X 18" LONG			EA	6			
W	347	ANCHOR COUPLING; TYLER	6" X 24" LONG			EA	6			

WATER	ITEM #	DESCRIPTION	SIZE	APPROVED PART #	ALTERNATE PART #	UNIT	EST. QTY. FY 26/27	BIDDER	UNIT PRICE	ESTIMATED DELIVERY TIME
		ACCESSORIES								
W	389	M.J. ACC KIT; UFCO	3"	912-096-5892		EA	4			
W	390	M.J. ACC KIT; SIGMA	4"	DGP 4"		EA	5			
W	391	M.J. BOLT PACK SET	6"	SIP 6"		EA	10			
W	392	M.J. BOLT PACK SET	8"	SIP 8"		EA	4			
W	393	M.J. ACC KIT; SIGMA	10"	DGP 10		EA	2			
W	394	M.J. ACC KIT	12"			EA	4			
W	395	M.J. ACC KIT	16"			EA	4			
W	397	TRANSITION GASKET	4"			EA	4			
W	398	TRANSITION GASKET	6"			EA	8			
W	399	TRANSITION GASKET	8"			EA	6			
W	400	MEGALUG D. I.; FORD	3"	UFR 1500-SA-3-I		EA	4			
W	401	MEGALUG AND ACC KIT (D I); SIGMA	4"	829,805,219,567		EA	4			
W	402	MEGALUG AND ACC KIT (D I); SIGMA	6"	UFR 1400-DA-6		EA	4			
W	403	MEGALUG AND ACC KIT (D I); EBAA	8"	110 804 1903		EA	2			
W	404	MEGALUG AND ACC KIT (D I); EBAA	10"	1,110,041,903		EA	2			
W	405	MEGALUG AND ACC KIT (D I); FORD	12"	UFR 1400-DA-12-I		EA	2			
W	406	MEGALUG AND ACC KIT (D I)	16"			EA	4			
W	407	MEGALUG AND ACC KIT (D I)	24"			EA	2			
W	408	MEGALUG AND ACC KIT (D.I.)	36"			EA	2			
W	412	MEGALUG AND ACC KIT (C900); SIGMA	4"	829,805,219,864		EA	10			
W	413	MEGALUG AND ACC KIT (C900); SIGMA	6"	829 805 219 871		EA	40			
W	414	MEGALUG AND ACC KIT (C900); SIGMA	8"	829 805 219 888		EA	30			
W	415	C900 MEGALUG; EBAA	10"	2,010,161,903		EA	6			
W	416	C900 MEGALUG; SIGMA	12"	829 052 199 01		EA	6			
W	417	MEGALUG AND ACC KIT ((DI)	18"			EA	4			
W	418	MEGALUG AND ACC KIT (D I)	20"			EA	4			

WATER	ITEM #	DESCRIPTION	SIZE	APPROVED PART #	ALTERNATE PART #	UNIT	EST. QTY. FY 26/27	BIDDER	UNIT PRICE	ESTIMATED DELIVERY TIME
		VALVES								
W	423	GATE VALVE - THREADED; KENNEDY	2"	228D2X		EA	10			
W	424	GATE VALVE; KENNEDY	3"	324,067,014,001		EA	2			
W	425	GATE VALVE' M&H	4"	367,571,011,008		EA	2			
W	426	GATE VALVE; M&H	6"	467,571,011,008		EA	5			
W	427	TAPPING VALVE; MUELLER	6"	4,187,696		EA	2			
W	428	GATE VALVE; MUELLER	8"	080A236023LN		EA	5			
W	429	GATE VALVE	10"			EA	1			
W	430	GATE VALVE; M&H	12"	587,571,011,008		EA	1			
W	431	GATE VALVE; MUELLER	16"	11,505,876,777		EA	1			

WATER MATERIALS BID LIST 2025-2026

WATER	ITEM #	DESCRIPTION	SIZE	APPROVED PART #	ALTERNATE PART #	UNIT	EST. QTY. FY 26/27	BIDDER	UNIT PRICE	ESTIMATED DELIVERY TIME
		VALVE BOXES/RISERS								
W	436	SQUARE VALVE BOX CASTING & LID		JBS 8006		EA	15			
W	437	SQUARE STEEL VALVE BOX RISER	1.5"	JBS 8006		EA	5			
W	438	CONCRETE VALVE BOX RISER	2"			EA	15			
W	439	CONCRETE VALVE BOX RISER	4"			EA	15			
W	440	CONCRETE VALVE BOX RISER	6"			EA	15			
W	441	CONCRETE VALVE BOX RISER	12"			EA	10			
W	442	CONCRETE VALVE BOX RISER	18"			EA	10			
W	500	VALVE BOX EXTENSION; SIGMA	1"	VBR-1		EA	25			
W	501	VALVE BOX EXTENSION; SIGMA	1.5"	VBR-1.5		EA	25			
W	502	VALVE BOX EXTENSION; SIGMA	2"	VBR-2		EA	30			
W	503	VALVE BOX EXTENSION; SIGMA	3"	VBR-3		EA	25			
W	504	VALVE BOX EXTENSION; SIGMA	4"	VBR-4		EA	25			
W	505	VALVE BOX EXTENSION; SIGMA	6"	VBR-6		EA	25			
		HIGHLIGHTED PORTION IS ALSO ON THE GAS BID (G-232-237)	***PLEASE ALSO BID ON GAS (G-232-237) AS WELL***	***PLEASE ALSO BID ON GAS (G-232-237) AS WELL***						

WATER	ITEM #	DESCRIPTION	SIZE	APPROVED PART #	ALTERNATE PART #	UNIT	EST. QTY. FY 26/27	BIDDER	UNIT PRICE	ESTIMATED DELIVERY TIME
		HYDRANTS								
W	448	BLOW OFF-ABOVE GROUND; KUPFERLE	2" STRAIGHT BURY	MODEL 77		EA	8			
W	449	BLOW OFF-BELOW GROUND; KUPFERLE	2" STRAIGHT BURY	MODEL 78		EA	5			
W	450	POST HYDRANT,	3' BURY, 3" MJ SHOE, 2-1/2" OUTLET	M&H MODEL 33		EA	2			
W	451	FIRE HYDRANT ASSEMBLY; M&H YELLOW	5 1/4" 3' 6"bury	MODEL 129 3-Way 1 Pumper/2 Hose		EA	6			
W	452	HYDRANT TRAFFIC REPAIR KIT ; MUELLER	5 1/4"	MUELLER HRP301		EA	5			
W	453	HYDRANT TRAFFIC REPAIR KIT ; AMERICAN	5 1/4"	AMERICAN AD-B62B-KIT		EA	1			
W	454	HYDRANT TRAFFIC REPAIR KIT ; M&H	5 1/4"	M&H		EA	5			
W	458	MUELLER EXTENSION KIT	5 1/4" X 6"			EA	1			
W	459	MUELLER EXTENSION KIT	5 1/4" X 12"	A320-010		EA	1			
W	460	MUELLER EXTENSION KIT	5 1/4" X 18"	A320-16		EA	1			
W	461	MUELLER EXTENSION KIT	5 1/4" X 24"	A320-20		EA	1			
W	462	M&H EXTENSION KIT	5 1/4" X 6"			EA	1			
W	463	M&H EXTENSION KIT	5 1/4" X 12"	441129-5-12		EA	1			
W	464	M&H EXTENSION KIT	5 1/4" X 18"	441129-5-18		EA	1			
W	465	M&H EXTENSION KIT	5 1/4" X 24"	441129-5-24		EA	1			

WATER	ITEM #	DESCRIPTION	SIZE	APPROVED PART #	ALTERNATE PART #	UNIT	EST. QTY. FY 26/27	BIDDER	UNIT PRICE	ESTIMATED DELIVERY TIME
		INSERT VALVE & SLEEVES								
W	480	INSERT VALVE & SLEEVE W/ INSTALLATION	6"	HYDRO-STOP INSTA-VALVE 250 PATROIT	ROMAC	EA	1			
W	481	INSERT VALVE & SLEEVE W/ INSTALLATION	8"	HYDRO-STOP INSTA-VALVE 250 PATROIT	ROMAC	EA	1			
W	482	INSERT VALVE & SLEEVE W/ INSTALLATION	10"	HYDRO-STOP INSTA-VALVE 250 PATROIT	ROMAC	EA	1			
W	483	INSERT VALVE &SLEEVE W/ INSTALLATION	12"	HYDRO-STOP INSTA-VALVE 250 PATROIT	ROMAC	EA	1			
W	484	INSERT VALVE & SLEEVE W/ INSTALLATION	16"	HYDRO-STOP INSTA-VALVE 250 PATROIT		EA	1			

Badger Meter

Town of Smyrna

Invitation to Quote

Annual Gas, Water & Sewer Materials

Opening Day: Tuesday, May 19, 2026, at 2:00 p.m. CST

Badger Meter
4545 W Brown Deer Road
Milwaukee, Wisconsin 53223

Scott Smith
Account Manager
414-331-1341
Ssmith@badgermeter.com

Submitted on May 14, 2026

Badger Meter

4545 W Brown Deer Road
PO Box 245036
Milwaukee, Wisconsin 53224-9536
414-355-0400 | 800-876-3837
www.badgermeter.com

May 14, 2026

Purchasing Department
Town of Smyrna
315 South Lowry Street
Smyrna, TN 37167

RE: Annual Gas, Water & Sewer Materials Invitation to Quote (ITQ)
Opening Date: Tuesday, May 19, 2026, at 2:00 p.m. CST

Dear Purchasing Department:

Accompanying this letter is the response from Badger Meter, Inc. ("Badger Meter") to the Town of Smyrna's ("the Town"), Invitation to Quote (ITQ) requesting a supply of new meters. Badger Meter appreciates the opportunity to support the Town's objectives set forth with the release of this ITQ. At Badger Meter, we take our customers' needs seriously and look forward to demonstrating to the Town what it means to partner with us. The commitment of Badger Meter is to provide the Town high-quality products that are readily available and offer extraordinary value. Our people, operations, and products have allowed us to deliver on this commitment consistently, providing an exceptional customer experience and Smart Water solution for the complete water ecosystem.

Badger Meter is a market leader in water meter technology with 120+ years of experience designing, manufacturing, and supplying water meters, including over 35 million water meters installed nationwide. With more than a century in the metering business, the Town can rest assured Badger Meter is a reputable company renowned for providing the highest-quality products.

This letter, as well as the general disclosures attached, become part of the Badger Meter response. In the event you have any questions regarding this correspondence, our Proposals department can be reached by email at proposals@badgermeter.com or by telephone at 800-876-3837. Additionally, you may contact your Account Manager, Scott Smith, by email at Ssmith@badgermeter.com or by telephone at 414-331-1341.

A copy of the bid tabulation, for our records, is appreciated. Electronic results can be emailed to proposals@badgermeter.com.

Utilities continue to choose Badger Meter as a partner due to our commitment to excellence and our ability to deliver proven solutions that meet their current and evolving requirements. Thank you for considering Badger Meter.

Sincerely,

BADGER METER, INC.

Rachel J. Meyer
Assistant Secretary and Proposal Manager

GENERAL DISCLOSURES

CONFIDENTIALITY STATEMENT

The information contained herein is to be considered confidential and proprietary to the extent allowable by law. © 2026 Badger Meter, Inc. All rights reserved.

DISCLOSURES

For this response to the Town's ITQ, please note payment terms are net 30 days. Prices quoted in this bid, if awarded to Badger Meter, will remain firm for one-year, through June 30, 2027, if a contract has been executed between Badger Meter and the Town within 90 days.

If applicable, sales tax and freight will be calculated based on rates and tax status in effect at the time of invoicing.

Due to continuous improvements and redesign of our products and technology solutions, Badger Meter reserves the right to provide our newest product solutions as an alternative to the proposed products, provided they are in conformance with the requirements of the specifications and do not exceed the prices quoted.

We provide certification files to help you manage your meter and endpoint inventory along with the corresponding meter accuracy data. The standard method of delivery for this format is via electronic mail. Any deviations from our standard format, or any custom file formats, will be considered on a time and material basis.

With respect to Section B (Deductibles and Self-Insured Retentions) in Section II of the ITQ, Badger Meter has a $25,000 deductible per occurrence on its commercial general liability policy which is appropriate for a manufacturing company of the size and financial strength of Badger Meter.

TABLE OF CONTENTS

Legal Notice & Agreement
Section III- Specification Compliance
Water Materials Bid List
Appendix
Product Data Sheets
Warranty Documentation

LEGAL NOTICE & AGREEMENT



LEGAL NOTICE

INVITATION TO SUBMIT QUOTATIONS

The Town of Smyrna will accept quotations on the annual Gas, Water and Sewer materials for the Utilities Department. Bidders shall submit sealed quotations in the format specified in the Invitation to Submit Quotations no later than **2:00 p.m. May 19, 2026** at which time the bids will be publicly opened and read aloud. No bid may be withdrawn after the scheduled closing time for a period of 90 days. Bidding documents may be obtained at Smyrna Town Hall during regular business hours or www.townofsmyrna.org. Quotations should be mailed or hand delivered to:

Purchasing Department
Smyrna Town Hall
Sealed Bid on Annual Gas, Water & Sewer Materials
May 19 @ 2:00 p.m.
315 South Lowry Street
Smyrna, TN 37167

The Town of Smyrna will not discriminate in the purchase of all goods and services on the basis of race, color, religion, sex, national origin, age, disability or any other lawfully protected classification.

Verbal quotations, faxed quotations or quotations received after the closing date will not be accepted. The Town of Smyrna reserves the right to reject any and all bids, to waive technicalities or informalities and to accept any bid deemed to be in the best interest of the Town.

BY: Sierra Lowry
Finance Director

TO BE RUN: May 5, 2026

Badger Meter, Inc.

COMPANY NAME



AGREEMENT

This Agreement is made and entered into as of this _____ day of _____, 20___, by and between _____, a _____ _____ (the "Bidder") and the Town of Smyrna, Tennessee, a Tennessee municipal corporation (the "Town") for the purpose of _____.

WHEREAS, the Bidder has submitted a quotation for the provision of certain products and/or services to the Town, all in accordance with the terms of the Invitation to Submit Quotations attached hereto and incorporated herein by reference as if set forth at length verbatim as Exhibit A (the "ISQ"), and which Proposal from the Bidder is attached hereto and incorporated herein by reference as if set forth at length verbatim as Exhibit B (the "Quotation"); the ISQ and the Quotation, together with any and all ancillary documents thereto, shall be collectively referred to herein as the "Bid Documents"; and

WHEREAS, the Town now desires to accept the Bidder's quotation, in accordance with the terms set forth in such Bid Documents.

NOW, THEREFORE, in consideration of the mutual covenants contained herein, and for other good and valuable consideration, the receipt and sufficiency of which is hereby acknowledged, the undersigned do hereby agree as follows:

1. Acceptance of Bid Documents. The terms of the Bid Documents, as incorporated herein by reference, are hereby accepted by the parties hereto. The Bidder hereby agrees to provide the goods and/or services contemplated by such Bid Documents in accordance with the terms set forth therein. The Town hereby accepts the Bidder's quotation to provide the goods and/or services contemplated by such Bid Documents in accordance with the terms set forth therein.

2. Entire Agreement. This Agreement, including the exhibits and any other documents referred to herein or therein, which form a part hereof, contains the entire understanding of the parties with respect to its subject matter. There are no restrictions, agreements, promises, warranties, covenants or undertakings other than those expressly set forth herein or therein. This Agreement supersedes all prior written or oral agreements and understandings between the parties with respect to its subject matter and may not be altered, modified or amended, in whole or in part, except by the express written authorization and consent of the parties hereto.

3. Severability. This agreement constitutes the product of negotiations of the parties hereto and any enforcement of hereof will be interpreted in a neutral manner and not more strongly against any party based upon the source of the draftsmanship of this Agreement. If any provision of this Agreement shall be held invalid or unenforceable by a court of competent jurisdiction, the remaining provisions hereof shall continue to be fully effective.

4. Limitation of Liability. The Town of Smyrna shall not be liable for any loss, claim, expense or damage caused by, contributed to or arising out of the acts or omission of Bidder or third parties, whether negligent or otherwise.

5. Warranties. The Bidder warrants to the Town that all materials and equipment furnished under this Contract will be new unless otherwise specified, and that all work will be of good quality, ~~free from faults and defects, suitable for the purpose for which the materials and equipment are furnished, and in conformance with the Agreement. If it does not perform as warranted, Bidder shall use all commercially reasonable efforts to correct the product(s) so that it operates in all material respects in conformity with the written representations of Bidder. If Bidder cannot correct the product(s) within a reasonable period of time, Bidder shall refund the purchase price of the product(s). All work not conforming to these requirements, including substitutions not properly approved and authorized, may be considered defective.~~ and are warranted as stated in the Badger Meter standard manufacturer warranties provided within the Bid Documents.

6. Software Deadline, Testing and Acceptance: If applicable to the Agreement, software provided by Bidder shall be installed for the purposes of testing, as stated herein below, no later than one hundred twenty (120) days from the effective date of this Agreement unless the parties, in writing, set a different specific date. In Addition, software provided by Bidder to The Town is subject to inspection and testing to verify that the software conforms to its written specifications and to ensure it meets The Town's needs. The Town shall have seven (7) business days after the software is installed to perform testing of the software using The Town's data. The Town shall provide Bidder with written notice of acceptance or rejection of the software five (5) business days or less after the end of the testing period. If the Town does not provide timely written notice of acceptance or rejection to Bidder, the software shall be deemed to be accepted by The Town. If the software is rejected, The Town may, at its sole discretion, either (1) return the software and receive a refund of all fees paid with respect thereto, or (2) allow Bidder to repair or replace the software, without charge, in a timely manner. In the event The Town elects to allow the Bidder to repair or replace the software, The Town shall have an additional (7) business days in which to accept or reject the software as laid out hereinabove.

7. Use of The Town's Logo or Name: Bidder shall not use The Town's name or any logo in marketing or publicity materials or for marketing or publicity purposes without the prior written authorization from The Town. Bidder shall not issue, publish, or divulge any materials developed or used in the performance of this Agreement or make any statement to the media relating to this Agreement without the prior written consent of The Town.

3. Severability. This agreement constitutes the product of negotiations of the parties hereto and any enforcement of hereof will be interpreted in a neutral manner and not more strongly against any party based upon the source of the draftsmanship of this Agreement. If any provision of this Agreement shall be held invalid or unenforceable by a court of competent jurisdiction, the remaining provisions hereof shall continue to be fully effective.

4. Limitation of Liability. The Town of Smyrna shall not be liable for any loss, claim, expense or damage caused by, contributed to or arising out of the acts or omission of Bidder or third parties, whether negligent or otherwise.

5. Warranties. The Bidder warrants to the Town that all materials and equipment furnished under this Contract will be new unless otherwise specified, and that all work will be of good quality, free from faults and defects, suitable for the purpose for which the materials and equipment are furnished, and in conformance with the Agreement. If it does not perform as warranted, Bidder shall use all commercially reasonable efforts to correct the product(s) so that it operates in all material respects in conformity with the written representations of Bidder. If Bidder cannot correct the product(s) within a reasonable period of time, Bidder shall refund the purchase price of the product(s). All work not conforming to these requirements, including substitutions not properly approved and authorized, may be considered defective.

6. Software Deadline, Testing and Acceptance: If applicable to the Agreement, software provided by Bidder shall be installed for the purposes of testing, as stated herein below, no later than one hundred twenty (120) days from the effective date of this Agreement unless the parties, in writing, set a different specific date. In Addition, software provided by Bidder to The Town is subject to inspection and testing to verify that the software conforms to its written specifications and to ensure it meets The Town's needs. The Town shall have seven (7) business days after the software is installed to perform testing of the software using The Town's data. The Town shall provide Bidder with written notice of acceptance or rejection of the software five (5) business days or less after the end of the testing period. If the Town does not provide timely written notice of acceptance or rejection to Bidder, the software shall be deemed to be accepted by The Town. If the software is rejected, The Town may, at its sole discretion, either (1) return the software and receive a refund of all fees paid with respect thereto, or (2) allow Bidder to repair or replace the software, without charge, in a timely manner. In the event The Town elects to allow the Bidder to repair or replace the software, The Town shall have an additional (7) business days in which to accept or reject the software as laid out hereinabove.

7. Use of The Town's Logo or Name: Bidder shall not use The Town's name or any logo in marketing or publicity materials or for marketing or publicity purposes without the prior written authorization from The Town. Bidder shall not issue, publish, or divulge any materials developed or used in the performance of this Agreement or make any statement to the media relating to this Agreement without the prior written consent of The Town.

8. Indemnification. The parties hereto agree that Bidder shall indemnify The Town for any and all claims of negligence, tortious conduct or otherwise unlawful acts committed by Bidder in the performance of their obligations under the terms of this agreement, including any and all attachments or exhibits thereto and Bidder agrees to pay any and all costs associated with the enforcement of the terms of this indemnity agreement by The Town, including but not limited to, court costs, civil judgments, assessments or any other reasonable fees associated therewith. This clause shall survive the expiration or termination of this Agreement and shall remain in full force and effect until the expiration of any applicable statute of limitation. In addition, Article II, Section 29 of the Tennessee Constitution prohibits municipalities from lending their credit to private of public entities and, therefore, prohibits an agreement by The Town to indemnify a third party or agree to a limitation of liability provision.

9. Non-Appropriation: Bidder acknowledges that The Town is a governmental entity, and the validity of this Agreement is based upon the availability of public funding under its authority. In the event The Town fails to appropriate funds or make monies available for any fiscal year covered by the term of this Agreement for services to be provided, this Agreement shall be terminated on the last day of the fiscal year for which funds were appropriated or monies made available for such purposes without liability to The Town, and such termination shall not be a breach of the Agreement, and any unused payment made to Bidder shall be returned to The Town.

10. Tax Exemption: As a tax-exempt entity, The Town shall not be responsible for sales or use taxes incurred for products or services. The Town shall supply Bidder with its Sales and Use Tax Exemption Certificate upon Bidder's request. Bidder shall bear the burden of providing its suppliers with a copy of The Town's tax exemption certificate and Bidder shall assume all liability for such taxes, if any, that should be incurred.

11. Attorney Fees. The parties hereto agree that The Town shall be in no event liable for any attorney's fees which Bidder may incur due to breach of this Agreement by either party; and further, The Town shall not acquiesce to any term in any document that indicates or infers The Town may or shall be responsible for the Attorney's fees of another party or the Bidder's attorney fees.

12. Boycott of Israel. The Bidder certifies that it is not currently engaged in, and covenants that it will not, for the duration of the Contract, engage in a Boycott of Israel, as that term is defined in Tenn. Code Ann. § 12-4-119.

13. Failure to perform. The parties agree, in the event Bidder fails to perform any obligation, other than with regards to the date of delivery, set out in this Agreement, the Town shall be reimbursed by Bidder for any and all expenses associated with having to obtain a new provider to finish out the contracted term, including, but in no way limited to, any charges/fees, which are above and beyond the amount the Town would have paid to Bidder to complete the same task; provided, however, that if the failure, by its nature, is one that can be cured, the Bidder shall have fifteen (15) business days after receipt of written notice from the Town to cure said failure to perform. The parties hereby agree, unless a specific date of delivery is provided in this Agreement or other bid documents, all deliveries shall be made to the Town no later than ninety (90) days from the date of order. The parties further agree that if Bidder, in good faith, is not able to meet this ninety (90) day deadline of delivery due to forces beyond his, her or its control, that were unforeseeable at the time of signing this contract, then this entire Agreement shall be voidable at the sole discretion of the Town. Should the Town elect to void this Agreement due to Bidder's good faith inability, due to forces beyond his, her or its control, and which were unforeseeable at the time of signing this Agreement to meet the delivery deadline, then neither party shall be deemed to have breached this Agreement, and Bidder shall return all monies, within seven (7) business days, paid by the Town for the products/items that could not be delivered in the allotted time.

14. Unilateral Modification of Agreement Not Permitted: Bidder may make unilateral changes to its Privacy Policy, provided any such changes are subject to the provisions of this Agreement but shall not materially alter the use of the service or reduce the level of protection provided to the Town at the time of the execution of this Agreement. Except as provided in the preceding sentence, notwithstanding anything in this Agreement to the contrary, any change to this Agreement made by Bidder that is not in writing and that is not properly executed by the signatures of authorized representatives of the parties hereto, including attestation by The Town's Clerk and approved as to form by the Town Attorney are subject to the terms and conditions of this Agreement.

15. Changes to Terms: Except as provided in Paragraph No. 13 above pertaining to Bidder's Privacy Policy, Bidder shall provide The Town written notice, sent in care of Town Attorney's Office, Smyrna, Tennessee, 315 South Lowry Street, Tennessee 37167, of any proposed change to this Agreement at least ninety (90) days prior to being effective to The Town. The Town shall have thirty (30) days after receiving the written notice to terminate this Agreement, and such cancellation shall not be a breach of this Agreement. Bidder will refund to The Town any payment made by The Town to Bidder equal to the difference between the number of months the payment was intended for and the number of months remaining on this Agreement that the fee was intended to cover.

16. Price Assurance: Unless specifically stated in this Agreement or other bid documents, the bid price shall be valid for the full term of this Agreement. If the Bidder, specifically states that he, she or it cannot honor the bid price for the full term of this Agreement; then this Agreement is voidable at the sole discretion of the Town, if at any time during the full term of this Agreement, Bidder requests to raise the bid

price. If the Town elects to void this Agreement, at its sole discretion, it shall not be deemed to be a breach of the contract by either party.

17. Confidentiality. The Town, as a Tennessee Municipal Corporation is subject to the Tennessee Open Records Act, set out in T.C.A. §10-7-503 et seq; therefore, this Agreement and all documents or materials, in any format, including, but not limited to paper, electronic or virtual, that are public records pursuant to law, are not confidential and are subject to disclosure. The Town will respond to all proper Open Records Requests in the time allowed by law, without any requirement to disclose such request to Bidder or provide Bidder with notice or the time to obtain a protective order. The Town does not have the burden of establishing that information is not confidential information or that its release is authorized to release the records. This section 16 serves to meet such burden and authorization of disclosure.

18. Mediation. The Town may, at its option, require the attempted resolution of any dispute arising under this Agreement by mediation prior to the filing of any lawsuit or other claim. Should any dispute arise, Bidder shall provide the Town notice of any intent to file suit by certified mail. The Town shall notify the Bidder of its intent to exercise its right to mediation within thirty (30) days of receiving such notice. If the Town does not exercise its right to mediation, Bidder may file suit. Any mediator selected under this clause shall be agreed upon by the parties and the costs of such mediation shall be divided and paid equally between the parties.

19. No Presumption Against Drafter: The parties are both business entities having substantial experience with the subject matter of this Agreement, and each has fully participated in the negotiation and drafting of this Agreement. Accordingly, this Agreement shall be construed without regard to the rule that ambiguities in a document are to be construed against the draftsman. No inferences shall be drawn from the fact that the final, duly executed Agreement differs in any respect from any previous draft hereof.

20. Governing Law. This Agreement shall be deemed to have been executed and delivered within the State of Tennessee, and the rights and obligations of the parties shall be construed and enforced in accordance with, and governed by, the laws of the State of Tennessee. The parties agree that all obligations of the parties are performable in Smyrna, Tennessee.

21. Choice of Forum and Venue. The parties' choice of forum and venue shall be exclusively in the courts of Rutherford County, Tennessee or the United States District Court, for the Middle District of Tennessee. The parties hereby waive their right to a jury trial. Any provision of the Agreement held to violate a law or regulation shall be deemed void, and all remaining provisions shall continue in force.

IN WITNESS WHEREOF, the undersigned have executed this Agreement as of the date set forth above.

TOWN OF SMYRNA, TENNESSEE

By: _____
Name: Mary Esther Reed
Title: Mayor

ATTEST:

_____
Amber Hobbs, Town Clerk

BIDDER:

By: _____
Title: Rachel J. Meyer, Assistant Secretary and Proposal Manager

ATTEST:

_____
Najah Kingsby, Proposal Specialist

SECTION III- SPECIFICATIONS COMPLIANCE



SECTION III - SPECIFICATIONS COMPLIANCE

Unless otherwise noted, all quotations for the annual gas, water and sewer materials shall be in complete accordance with the specifications detailed herein.

Bidders shall note in the space provided below any exceptions or deviations in any way from the specifications of any section of this ISQ. Bidders should provide complete detail of exceptions or deviations.

Proposal Exceptions

Section	Brief Description
Section C (Other Insurance Provisions) in Section II	With respect to Section C (Other Insurance Provisions) in Section II of the ITQ, Badger Meter has ample coverage to satisfy the Town's requirements for a supply-only contract. The requirements that the Town be named as additional insured and for prmary and non-contributory coverage on the CGL and auto liability coverages as well as the waiver of subrogation for the workers' compensation coverage are more appropriately utilized in circumstances other than a supply-only contract. As such, Badger Meter respectfully takes exception to these requirements. Please find attached a sample Certificate of Liability Insurance for your review.
Section E (Verification of Coverage) in Section II	With respect to Section E (Verification of Coverage) in Section II of the ITQ, please note Badger Meter is a publicly traded company and our insurance policies are considered confidential information. As the Town is subject to open records requests, we do not provide copies of our insurance policies.
Section 5 (Warranties) of the Agreement	With respect to Section 5 of the Agreement, Badger Meter's standard manufacturer warranties will apply and govern. The extent of the warranty to be provided by Badger Meter is set forth in the standard warranties that have been enclosed herein. As such, we have proposed a revision to this section of the Agreement to reflect the same.
	Badger Meter reserves the right to adjust pricing during the term to account for changes in law or other geoeconomic influences that are not enacted at the time of bid including, but not limited to, tariffs, duties, and taxes.
	After the initial one-year term, Badger Meter reserves the right to increase pricing for our products at the time of renewal.

By signature below, vendor acknowledges any quotation to be in full compliance with all aspects of each section of the ISQ not noted above. The undersigned hereby declares that no person or party other than the undersigned has any interest whatever in this proposal, that it is without any connection or collusion with any person or persons making or having made any proposal for the same work and without any previous understanding with such person or persons as to relative prices, obviating competition, and that it is made in good faith.

Badger Meter, Inc.
COMPANY

800-876-3837
TELEPHONE NUMBER

Rachel J. Meyer
REPRESENTATIVE NAME

Assistant Secretary and Proposal Manager
REPRESENTATIVE TITLE

SIGNATURE

proposals@badgermeter.com
E-MAIL ADDRESS

WATER MATERIALS BID LIST



WATER MATERIALS BID LIST 2025-2026

WATER	ITEM #	DESCRIPTION	SIZE	APPROVED PART #	ALTERNATE PART #	UNIT	EST. QTY. FY 26/27	BIDDER	UNIT PRICE	ESTIMATED DELIVERY TIME
		METER YOKES/ACCESSORIES								
W	1	METER RETROSETTER W/ 360° LOCKWING & DC; MUELLER (FORD ALTERNATE)	5/8" X 3/4"	203B2446-R5---N	RETRO-2CVBRHH-NL	EA	10	NO BID	NO BID	
W	2	METER RISER; RELOCATOR W/ 360° LOCKWING & DC; MUELLER (FORD ALTERNATE)	5/8" X 3/4" X 7"	234B24118R5---N	VBHH42-7WR-NL	EA	200	NO BID	NO BID	
W	3	METER RISER; RELOCATOR W/ 360° LOCKWING & DC; MUELLER (FORD ALTERNATE)	5/8" X 3/4" X 12"	238B24118R5---N	VBHH42-12-NL	EA	10	NO BID	NO BID	
W	4	METER RISER RELOCATOR W/ 360° LOCKWING & DC; MUELLER (FORD ALTERNATE)	1" X 10"	389B24118R5---N	VBHH44-10-NL	EA	80	NO BID	NO BID	
W	5	METER RISER; RELOCATOR W/ 360° LOCKWING & DC; MUELLER (FORD ALTERNATE)	1.5" X 14"	063B2424--5N	VBRHH46-14-NL	EA	5	NO BID	NO BID	
W	6	METER RISER; RELOCATOR W/ 360° LOCKWING & DC; MUELLER (FORD ALTERNATE)	2" X 14"	087B2424--5N	VBRHH47-14-NL	EA	10	NO BID	NO BID	
W	7	METER RISER; RELOCATOR W/360° LOCKWING & DC; FORD W/BYPASS	2" X 14"	1-VBHH47-14B-NL	n/a	EA	2	NO BID	NO BID	
W	9	METER SWIVEL 2.5L; FORD	5/8" X 3/4" X 3/4"x 2.5" LONG	C38-23-2.5-NL	MUELLER H-10890N	EA	200	NO BID	NO BID	
W	10	METER SWIVEL COUPLING ; FORD	5/8" x 3/4" x 3/4" x 2.25" LONG	C38-23-2.25-NL	MUELLER H-10890026	EA	5	NO BID	NO BID	
W	11	METER SWIVEL COUPLING STRAIGHT; FORD	1"	C38-44-2-625-NL	MUELLER H-10890	EA	80	NO BID	NO BID	
W	12	FLANGE PAK FOR METER - BRASS (BOX W/2)	1.5"	4415FSC	or equal	EA	8	NO BID	NO BID	
W	13	FLANGE PAK FOR METER - BRASS (BOX W/ 2)	2"	4420FSC	or equal	EA	10	NO BID	NO BID	
W	14	A-24 METER ADAPTOR; FORD	5/8" x 3/4" to 1"	A24-NL	or equal	EA	120	NO BID	NO BID	
W	15	A-47 FLANGED METER ADAPTOR; FORD (BOX W/ 2)	1" TO 2"	A47-NL	or equal	EA	5	NO BID	NO BID	
W	16	A-67 FLANGED METER ADAPTOR; FORD (BOX W/2)	1.5" TO 2"	A67-NL	or equal	EA	5	NO BID	NO BID	
								NO BID	NO BID	

WATER	ITEM #	DESCRIPTION	SIZE	APPROVED PART #	ALTERNATE PART #	UNIT	EST. QTY. FY 26/27	BIDDER	UNIT PRICE	ESTIMATED DELIVERY TIME
		WATER REGULATORS								
W	17	REGULATOR; WATTS	3/4"	LF25AUB-Z3		EA	4	NO BID	NO BID	
W	18	REGULATOR; WATTS	1"	1LF25AUB-Z3		EA	4	NO BID	NO BID	
W	19	REGULATOR; ZURN WILKINS	3/4"	MODEL 70XL		EA	2	NO BID	NO BID	

WATER	ITEM #	DESCRIPTION	SIZE	APPROVED PART #	ALTERNATE PART #	UNIT	EST. QTY. FY 26/27	BIDDER	UNIT PRICE	ESTIMATED DELIVERY TIME
		WATER MOUDLE								
W	21	ITRON UNIVERSAL MOUDLE W/ LID MOUNTING KIT	UNIVERSAL	ERW-1350-001 100W+/CFG-1601-001	n/a	EA	275	NO BID	NO BID	
W	22	ITRON UNIVERSAL LEAK SENSOR	UNIVERSAL	LDS-1601-001	n/a	EA	10	NO BID	NO BID	
W	23	CELLULAR 500W MODULE W/ LID MOUNTING KIT	UNIVERSAL	ECW-1700-001/CFG-1601-001	n/a	EA	100	NO BID	NO BID	

WATER	ITEM #	DESCRIPTION	SIZE	APPROVED PART #	ALTERNATE PART #	UNIT	EST. QTY. FY 26/27	BIDDER	UNIT PRICE	ESTIMATED DELIVERY TIME
		METERS AND PARTS								
W	24	METER CIB/HRE/USG W/ ITRON CONNECTOR; BADGER	5/8" X 3/4"	MODEL 25LL (NSF 61-G MTR)	n/a	EA	200	Badger Meter, Inc.	$160.68	5 Days ARO
W	25	METER CIB/HRE/USG W/ ITRON CONNECTOR; BADGER	1"	MODEL 70 LL (NSF 61-G MTR)	n/a	EA	80	Badger Meter, Inc.	$296.86	5 Days ARO
W	26	METER CIB/HRE/USG W/ ITRON CONNECTOR; BADGER	1.5	MODEL 120 LL (NSF 61-G-MTR)	n/a	EA	4	Badger Meter, Inc.	$553.70	10 Days ARO
W	27	METER ELLIPTICALW/T. PLUG HRE/USG W/ ITRON CONNECTOR W/ D. P.; BADGER	2"	MODEL 170 LL (NSF 61- G-MTR)	n/a	EA	6	Badger Meter, Inc.	$781.20	10 Days ARO
W	28	METER BOTTOMS FOR BADGER METER; BADGER	5/8" X 3/4"	57799 - 001	n/a	EA	25	Badger Meter, Inc.	$8.24	5 Days ARO
W	29	METER BOTTOMS FOR BADGER METER	1"	59293 - 002	n/a	EA	10	Badger Meter, Inc.	$22.66	5 Days ARO
W	37	CHAMBER for M70 BADGER METER	1"	33334-032	n/a	EA	5	Badger Meter, Inc.	$101.97	5 Days ARO
W	38	CHAMBER for M120 BADGER METER	1.5"	33334-017	n/a	EA	5	Badger Meter, Inc.	$218.36	5 Days ARO
W	39	CHAMBER forM170 BADGER METER	2"	33334-028	n/a	EA	5	Badger Meter, Inc.	$232.78	5 Days ARO
W	40	RETROFIT REGISTER w/ ITRON CONNECTOR; BADGER	5/8" X 3/4"	M25/RETRO/RT	n/a	EA	400	Badger Meter, Inc.	$96.89	5 Days ARO
W	41	RETROFIT REGISTER w/ ITRON CONNECTOR; BADGER	1"	M70/RETRO/RT	n/a	EA	6	Badger Meter, Inc.	$96.89	5 Days ARO
W	42	RETROFIT REGISTER w/ ITRON CONNECTOR; BADGER	1.5"	M120/RETRO/RT	n/a	EA	2	Badger Meter, Inc.	$96.89	10 Days ARO
W	43	RETROFIT REGISTER w/ ITRON CONNECTOR; BADGER	2"	M170/RETRO/RT	n/a	EA	4	Badger Meter, Inc.	$96.89	10 Days ARO

WATER	ITEM #	DESCRIPTION	SIZE	APPROVED PART #	ALTERNATE PART #	UNIT	EST. QTY. FY 26/27	BIDDER	UNIT PRICE	ESTIMATED DELIVERY TIME
		ULTRASONIC METERS AND PARTS								
W	44	NEPTUNE METER W/ 5' ITRON CONNECTOR in 100 USG	2" x 17"	EU2E1G1SG61		EA	4	NO BID	NO BID	

WATER MATERIALS BID LIST 2025-2026

W	45	NEPTUNE METER W/ 25' ITRON CONNECTOR in 100 USG W/ FLANGE PAKS	3"X 12"	EU3A1G1SG61		EA	2	NO BID	NO BID	
W	46	NEPTUNE METER W/ 25' ITRON CONNECTOR in 100 USG W/ FLANGE PAKS	4" X 14"	EU3C1G1SG61		EA	2	NO BID	NO BID	
W	47	NEPTUNE METER W/ 25' ITRON CONNECTOR in 100 USG W/ FLANGE PAKS	6" X 18"	EU3E1G1SG61		EA	3	NO BID	NO BID	
WATER	ITEM #	DESCRIPTION	SIZE	APPROVED PART #	ALTERNATE PART #	UNIT	EST. QTY. FY 26/27	BIDDER	UNIT PRICE	ESTIMATED DELIVERY TIME
		METER BOXES AND LIDS								
W	48	SIGMA RMB-132418-SW W/ LC1324T-D READ DOOR AND RECESS TOUCH READ HOLE	5/8" x 3/4" meters	RMB- 132418-SW	OLD CASTLE 1324X18 /DI65-45-12	EA	50	NO BID	NO BID	
W	49	SIGMA RMB-173018-SW W/ LC1730T-D READ DOOR AND RECESS TOUCH READ HOLE	1" - 2" meters	RMB- 173018-SW	OLD CASTLE 1730X18/DI65-45-12	EA	25	NO BID	NO BID	
W	50	SIGMA LID ONLY LC1324T-D READ DOOR AND RECESS TOUCH READ HOLE	5/8" x 3/4" meters	RMB-1324-L-RT	TRI CAST LID DI 6545-12 W/ READ DOOR /TRANS HOLE1324	EA	10	NO BID	NO BID	
W	51	SIGMA LID ONLY LC1730T-D READ DOOR AND RECESS TOUCH READ HOLE	1" - 2" meters	RMB-1730-L-RT	TRI CAST LID DI 6545-12 W/ READ DOOR /TRANS HOLE1730	EA	10	NO BID	NO BID	
W	55	CI SOLID METER BOX LID W/ ITRON TR HOLE FOR BROOKS 36H15 METER BOX LID ONLY	CI SOLID LID FOR BROOKS 36HI5	LC 223T ITRON	n/a	EA	25	NO BID	NO BID	
		*1324 AND 1730 BOXES SHALL COME W/LID READER DOOR AND RECESS TOUCH READ HOLE		LC1324T-D/1730T-D	Tricast DI w/ read door /trans hole 1324/1730					
WATER	ITEM #	DESCRIPTION	SIZE	APPROVED PART #	ALTERNATE PART #	UNIT	EST. QTY. FY 26/27	BIDDER	UNIT PRICE	ESTIMATED DELIVERY TIME
		VAULTS								
W	56	METER VAULT W/ ALUMINUM LID	2" METER VAULT	SEE DRAWING			2	NO BID	NO BID	
WATER	ITEM #	DESCRIPTION	SIZE	APPROVED PART #	ALTERNATE PART #	UNIT	EST. QTY. FY 26/27	BIDDER	UNIT PRICE	ESTIMATED DELIVERY TIME
		BRASS FITTINGS								
W	59	BRASS REDUCTION COUPLING	2" X 1.5"	B-RC0807		EA	2	NO BID	NO BID	
W	60	ROUGH BRASS 45° COUPLING	1.5"	BR4L		EA	2	NO BID	NO BID	
W	61	ROUGH BRASS 90° COUPLING	1.5"	BR9L		EA	2	NO BID	NO BID	
W	64	FEMALE THREAD BALL VALVE; FORD	3/4"	B11-233W-NL		EA	10	NO BID	NO BID	
W	65	BRASS TEE	2"x2"x2"	NSF61-4		EA	10	NO BID	NO BID	
W	66	BRASS THREADED 90°; MATCO	2"	NSF61-4		EA	10	NO BID	NO BID	
W	67	BRASS THREADED STREET 90°; MATCO	2"	NSF61-4		EA	10	NO BID	NO BID	
W	68	THREADED COUPLING; MATCO	2"	NSF61-4		EA	10	NO BID	NO BID	
W	69	BRASS ALL-THREAD	1.5"			EA	2	NO BID	NO BID	
W	70	BRASS NIPPLE	1.5" X 6"	BRNLU		EA	2	NO BID	NO BID	
W	71	BRASS ALL THREAD; MATCO--NORCA	2"	NBR08CL		EA	20	NO BID	NO BID	
W	72	BRASS NIPPLE; MATCO-NORCA	2" X 6" LONG	NBR086		EA	10	NO BID	NO BID	
W	73	BRASS NIPPLE; BMI	2" X 12" LONG	7 77701049941		EA	10	NO BID	NO BID	
W	74	BRASS NIPPLE	2" X 18" LONG			EA	6	NO BID	NO BID	
W	75	BRASS NIPPLE	2" X 24" LONG			EA	6	NO BID	NO BID	
W	76	CHECK VALVE; RED & WHITE	1.5"	236AB 1 1/2		EA	4	NO BID	NO BID	
W	77	CHECK VALVE; RED & WHITE	2"	236AB 2		EA	4	NO BID	NO BID	
W	78	APOLLO BALL VALVE	2"	A94ALF10801A		EA	6	NO BID	NO BID	
WATER	ITEM #	DESCRIPTION	SIZE	APPROVED PART #	ALTERNATE PART #	UNIT	EST. QTY. FY 26/27	BIDDER	UNIT PRICE	ESTIMATED DELIVERY TIME
		COMPRESSION FITTINGS								
W	82	COUPLING; FMLIP; FORD	FMLIP 3/4" X 3/4" CTS	C14-33-Q-NL		EA	5	NO BID	NO BID	
W	83	COUPLING; FORD	3/4" CTS X 3/4" CTS	C44-33-Q-NL		EA	30	NO BID	NO BID	
W	84	COUPLING; FORD	3/4" CTS PAK X 3/4" IP MALE	C84-33-Q-NL		EA	5	NO BID	NO BID	
W	85	COUPLING; FORD	3/4" CTS PACK X 1" CTS PACK	C44-34-Q-NL		EA	30	NO BID	NO BID	
W	86	COUPLING; FMLIP; FORD	FMLIP 1" X 1" CTS	C14-44-Q-NL		EA	15	NO BID	NO BID	
W	87	COUPLING; FORD	1" CTS X 1" CTS	C44-44-Q-NL		EA	25	NO BID	NO BID	
W	88	COUPLING; FORD	1" CTS X 1" I.P. MALE	C84-44-Q-NL		EA	6	NO BID	NO BID	
W	89	COUPLING; FORD	2" CTS X 2" CTS JOINT PK	C44-77-Q-NL		EA	6	NO BID	NO BID	
W	90	2" CTS X 2" IRON PIPE THREAD; FORD	2" CTS X 2" IRON PIPE THREAD	C84-77-Q-NL		EA	6	NO BID	NO BID	
W	91	COUPLING; T'S ; FORD	3/4" X 3/4" X 3/4" CTS	T444-333-Q-NL		EA	20	NO BID	NO BID	
W	92	COUPLING; T'S ; FORD	3/4" X 3/4" X 1" CTS	T444-443-Q-NL		EA	10	NO BID	NO BID	
W	93	COUPLING; T'S; FORD	1" X 1" X 3/4"	T444-443-AWT-Q-NL		EA	5	NO BID	NO BID	
W	94	COUPLING; T'S; FORD	1" X 1" X 1" CTS PAK JOINT	T444-444-Q-NL		EA	5	NO BID	NO BID	
W	95	BALL VALVE; FORD	3/4"	B44-233W-Q-NL		EA	20	NO BID	NO BID	

WATER MATERIALS BID LIST 2025-2026

W	96	BALL VALVE; FORD	1"	B44-344W-Q-NL		EA	20	NO BID	NO BID	
W	97	COUPLING; "Y"; FORD	3/4" X 3/4" X 1" CTS	Y44-243-Q-NL		EA	25	NO BID	NO BID	
W	98	90° COUPLING; FORD	3/4"	L44-33-Q-NL		EA	5	NO BID	NO BID	
W	99	90° COUPLING; FORD	1"	L44-44-Q-NL		EA	5	NO BID	NO BID	
W	100	Q -NUT ASSEMBLY	3/4"	QJN4-3		EA	20	NO BID	NO BID	
W	101	Q-NUT ASSEMBLY	1"	QJN4-4		EA	20	NO BID	NO BID	
W	102	FEMALE COPPER THREAD GRIP JOINT; FORD	3/4" X 3/4" CTS	C04-33-Q-NL		EA	5	NO BID	NO BID	
W	103	FEMALE COPPER THREAD GRIP JOINT; FORD	1" X 1" CTS	C04-44-Q-NL		EA	5	NO BID	NO BID	
W	104	PAK J ASSEMBLY; FORD	1" FEMALE X 3/4" CTS	C08-43-NL		EA	5	NO BID	NO BID	
W	105	COUPLING SWIVEL 45 DEGREE; FORD	3/4"X3/4"	LA04-33S-Q-NL		EA	5	NO BID	NO BID	
W	106	COUPLING SWIVEL 45 DEGREE; FORD	1"X1"	LA04-44S-Q-NL		EA	5	NO BID	NO BID	
W	107	COUPLING SWIVEL 90 DEGREE; FORD	3/4"X3/4"	L04-33S-Q-NL		EA	5	NO BID	NO BID	
W	108	COUPLING SWIVEL 90 DEGREE; FORD	1"X1"	L04-44S-Q-NL		EA	5	NO BID	NO BID	
W	109	MULTI SERVICE Y NL 1-2" FMLIP X 4-1" FMLIP	2"X1"	Y11-474-NL		EA	5	NO BID	NO BID	
WATER	ITEM #	DESCRIPTION	SIZE	APPROVED PART #	ALTERNATE PART #	UNIT	EST. QTY. FY 26/27	BIDDER	UNIT PRICE	ESTIMATED DELIVERY TIME
		CURB STOPS								
W	113	CURB STOP W/360 DEGREE LOCKING WINGNUT; FORD	3/4"	B43-232WR-Q-NL		EA	200	NO BID	NO BID	
W	114	CURB STOP W/360 DEGREE LOCKING WINGNUT; FORD	1"	B43-344WR-Q-NL		EA	25	NO BID	NO BID	
W	115	BALL VALVE PAD WING/CURB STOP; FORD	1.5"	BF13-666W-NL		EA	4	NO BID	NO BID	
W	116	BALL VALVE PAD WING/CURB STOP; FORD	2"	BF13-777W-NL		EA	4	NO BID	NO BID	
W	117	BALL VALVE PAD WING W/COMPRESSION FITTING; FORD	2"	BF43-777W-Q-NL		EA	6	NO BID	NO BID	
WATER	ITEM #	DESCRIPTION	SIZE	APPROVED PART #	ALTERNATE PART #	UNIT	EST. QTY. FY 26/27	BIDDER	UNIT PRICE	ESTIMATED DELIVERY TIME
		CORP STOPS								
W	122	CORPORATION STOP; FORD	3/4" TAPER X 3/4" CTS	FB1000-3-Q-NL		EA	10	NO BID	NO BID	
W	123	CORPORATION STOP; FORD	1" CC TAPER x 1"CTS	FB1000-4-Q-NL		EA	20	NO BID	NO BID	
W	124	CORPORATION STOP, IRON PIPE THREADS; FORD	1" IP THREAD X1" CTS	FB1100-4-Q-NL		EA	5	NO BID	NO BID	
WATER	ITEM #	DESCRIPTION	SIZE	APPROVED PART #	ALTERNATE PART #	UNIT	EST. QTY. FY 26/27	BIDDER	UNIT PRICE	ESTIMATED DELIVERY TIME
		TAPPING SADDLES								
W	143	TAPPING SADDLE; SMITH BLAIR	2" X 3/4" (2.35-2.56)	315-00025607-000		EA	5	NO BID	NO BID	
W	144	TAPPING SADDLE; SMITH BLAIR	2" X 1" (2.35-2.56)	315-00025609-000		EA	4	NO BID	NO BID	
W	145	TAPPING SADDLE; SMITH BLAIR	2-1/4" X 3/4" (2.44-2.91)	315-00029107-000		EA	5	NO BID	NO BID	
W	146	TAPPING SADDLE; SMITH BLAIR	2-1/4" X 1" (2.44-2.91)	315-00029109-000		EA	5	NO BID	NO BID	
W	149	TAPPING SADDLE; SMITH BLAIR	4" X 3/4" (4.40-4.80)	315-00048007-000		EA	4	NO BID	NO BID	
W	151	TAPPING SADDLE; SMITH BLAIR	4" X 1" (4.40-4.80)	315-00048009-000		EA	4	NO BID	NO BID	
W	155	TAPPING SADDLE; SMITH BLAIR	4" X 2" (4.40-4.80)	315-00048014-000		EA	4	NO BID	NO BID	
W	158	TAPPING SADDLE; SMITH BLAIR	6" X 3/4" (6.84-7.60)	315-00076007-000		EA	5	NO BID	NO BID	
W	160	TAPPING SADDLE ; SMITH BLAIR	6" X 1" (5.94-6.90)	315-00069009-000		EA	5	NO BID	NO BID	
W	161	TAPPING SADDLE; SMITH BLAIR	6" X 1" (6.84-7.60)	315-00076009-000		EA	5	NO BID	NO BID	
W	163	TAPPING SADDLE; SMITH BLAIR	6" X 2" (5.94-6.90)	315-00069014-000		EA	5	NO BID	NO BID	
W	165	TAPPING SADDLE ; SMITH BLAIR	6"x2" (6.84-7.60)	315-00076014-000		EA	5	NO BID	NO BID	
W	166	TAPPING SADDLE ; SMITH BLAIR	8" X 3/4" (8.54-10.10)	315-00101007-000		EA	5	NO BID	NO BID	
W	167	TAPPING SADDLE; SMITH BLAIR	8" X 1" (8.54-10.10)	315-00101009-000		EA	4	NO BID	NO BID	
W	171	TAPPING SADDLE; SMITH BLAIR	8" X 2" (8.54-10.10)	315-00101014-000		EA	2	NO BID	NO BID	
W	175	TAPPING SADDLE; SMITH BLAIR	10" X 2" (10.64-12.12)	315-00121214-00		EA	4	NO BID	NO BID	
W	176	TAPPING SADDLE; SMITH BLAIR	12" X 3/4" (12.64-14.32)	315-00143207-000		EA	2	NO BID	NO BID	
W	178	TAPPING SADDLE; SMITH BLAIR	12" X 1" (12.62-14.32)	315-00143209-000		EA	2	NO BID	NO BID	
W	180	TAPPING SADDLE; SMITH BLAIR	12"-14"X 2" (12.62-14.32)	315-00143214-000		EA	2	NO BID	NO BID	
W	181	TAPPING SADDLE; SMITH BLAIR	16"- X 2" (17.25-17.80)	317-00178014-000		EA	2	NO BID	NO BID	
W	182	TAPPING SADDLE; SMITH BLAIR	16"- X 2" (17.25-17.80)	317-00195014-000		EA	2	NO BID	NO BID	
W	183	TAPPING SADDLE:SMITH BLAIR	20"X2" (21.55-21.65)	317-00216014-000		EA	2	NO BID	NO BID	
W	184	TAPPING SADDLE; SMITH BLAIR	24" X 2" (25.75-25.85)	317-00258014-000		EA	2	NO BID	NO BID	

WATER MATERIALS BID LIST 2025-2026

WATER	ITEM #	DESCRIPTION	SIZE	APPROVED PART #	ALTERNATE PART #	UNIT	EST. QTY. FY 26/27	BIDDER	UNIT PRICE	ESTIMATED DELIVERY TIME
		REPAIR CLAMPS								
W	188	REPAIR CLAMP; SMITH BLAIR	3/4" X 6" FL CIR			EA	2	NO BID	NO BID	
W	189	REPAIR CLAMP; SMITH BLAIR	1" X 6" FL CIR (PVC)	244-00013206-000		EA	2	NO BID	NO BID	
W	190	REPAIR CLAMP; SMITH BLAIR	1-1/4" X 6"	244-00016609-000		EA	4	NO BID	NO BID	
W	191	REPAIR CLAMP; SMITH BLAIR	1.5" X 6" FL CIR (PVC)	244-00019006-000		EA	4	NO BID	NO BID	
W	192	REPAIR CLAMP; SMITH BLAIR	2" X 7" FL CIR (2.35-2.63)	226-00023807-000		EA	8	NO BID	NO BID	
W	193	REPAIR CLAMP; SMITH BLAIR	2.5" X 7" FL CIR (2.70-3.00)	226-00027507-000		EA	6	NO BID	NO BID	
W	194	REPAIR CLAMP; SMITH BLAIR	2" X 12.5" FL CIR (2.35-2.63)	226-00023812-000		EA	2	NO BID	NO BID	
W	195	REPAIR CLAMP; SMITH BLAIR	2.5" X 12" FL CIR (2.70-3.00)	226-00027512-000		EA	2	NO BID	NO BID	
W	196	REPAIR CLAMP; SMITH BLAIR	2" X 15" (2.35-2.63)	226-00023815-000		EA	2	NO BID	NO BID	
W	197	REPAIR CLAMP; SMITH BLAIR	2" X 25" (2.35-2.63)	226-00023825-000		EA	2	NO BID	NO BID	
W	198	REPAIR CLAMP; SMITH BLAIR	2.25" X 25" (2.70-3.00)	226-00027525-000		EA	2	NO BID	NO BID	
W	199	REPAIR CLAMP; SMITH BLAIR	3" X 7.5" FL CIR (3.73-4.00)	226-00037507-000		EA	2	NO BID	NO BID	
W	200	REPAIR CLAMP; SMITH BLAIR	3" X 12" FL CIR (3.46-3.70)	226-00035012-000		EA	2	NO BID	NO BID	
W	201	REPAIR CLAMP; SMITH BLAIR	4" X 7.5" FL CIR (3.96-4.25)	226-00040007-000		EA	2	NO BID	NO BID	
W	202	REPAIR CLAMP; SMITH BLAIR	4" X 7.5" FL CIR (4.45-4.73)	226-00045007-000		EA	2	NO BID	NO BID	
W	203	REPAIR CLAMP; SMITH BLAIR	4" X 7.5" FL CIR (4.74-5.14)	226-00048007-000		EA	6	NO BID	NO BID	
W	204	REPAIR CLAMP; SMITH BLAIR	4 X 12.5" FL CIR (4.74-5.14)	226-00048012-000		EA	2	NO BID	NO BID	
W	205	REPAIR CLAMP; SMITH BLAIR	4 X 15" FL CIR (PVC) (4.74-5.14)	226-00048015-000		EA	2	NO BID	NO BID	
W	207	REPAIR CLAMP; SMITH BLAIR	6" X 7" FL CIR (6.84-7.24)	226-00069007-000		EA	10	NO BID	NO BID	
W	208	REPAIR CLAMP; SMITH BLAIR	6" X 7.5" FL CIR (6.56-6.96)	226-00066307-000		EA	4	NO BID	NO BID	
W	210	REPAIR CLAMP; SMITH BLAIR	6" X 12" FL CIR (6.56-6.96)	226-00066312-000		EA	2	NO BID	NO BID	
W	211	REPAIR CLAMP; SMITH BLAIR	6" X 12" FL CIR (6.84-7.24)	226-00069012-000		EA	4	NO BID	NO BID	
W	212	REPAIR CLAMP; SMITH BLAIR	6" X 12.5" (7.05-7.45)	226-00071012-000		EA	2	NO BID	NO BID	
W	213	REPAIR CLAMP; SMITH BLAIR	6" X 15" FL CIR (6.56-6.96)	226-00066315-000		EA	2	NO BID	NO BID	
W	214	REPAIR CLAMP; SMITH BLAIR	6" X 15" (6.84-7.24)	226-00069015-000		EA	2	NO BID	NO BID	
W	215	REPAIR CLAMP; SMITH BLAIR	6" X 15" (7.05-7.45)	226-00071015-000		EA	2	NO BID	NO BID	
W	217	REPAIR CLAMP; SMITH BLAIR	8" X 7" FL CIR (8.54-8.94)	226-00086307-000		EA	4	NO BID	NO BID	
W	218	REPAIR CLAMP; SMITH BLAIR	8" X 7" FL CIR (8.99-9.39)	226-00090507-000		EA	8	NO BID	NO BID	
W	219	REPAIR CLAMP; SMITH BLAIR	8" X 12" FL CIR (8.99-9.39, DIP)	226-00090512-000		EA	2	NO BID	NO BID	
W	220	REPAIR CLAMP; SMITH BLAIR	8" X 15" (8.54-8.94)	226-00086315-000		EA	2	NO BID	NO BID	
W	221	REPAIR CLAMP; SMITH BLAIR	8" X 15" (8.99-9.39)	226-00090515-000		EA	2	NO BID	NO BID	
W	222	REPAIR CLAMP; SMITH BLAIR	10" X 15" FL CIR (DIP) (11.04-11.44)	226-00111015-000		EA	2	NO BID	NO BID	
W	223	REPAIR CLAMP; SMITH BLAIR	10" X 20" (11.04-11.44)	226-00114020-000		EA	2	NO BID	NO BID	
W	224	REPAIR CLAMP; SMITH BLAIR	12" X 7" FL CIR (13.10-13.50)	226-00132007-000		EA	2	NO BID	NO BID	
W	225	REPAIR CLAMP; SMITH BLAIR	12" X 12" FL CIR (DIP) (13.10-13.50)	226-00132012-000		EA	2	NO BID	NO BID	
W	226	REPAIR CLAMP; SMITH BLAIR	12' X 15' FL CIR (DIP) (13.10 - 13.50)	226-00132015-000		EA	2	NO BID	NO BID	
W	227	REPAIR CLAMP; SMITH BLAIR	16" X 15" (17.15-17.90)	228-20171515-000		EA	2	NO BID	NO BID	
W	229	REPAIR CLAMP; SMITH BLAIR	16" X 20" FL CIR (17.15-17.90)	228-20178220-000		EA	2	NO BID	NO BID	
W	230	REPAIR CLAMP; SMITH BLAIR	16" X 30" (17.15-17.90)	228-20171530-000		EA	2	NO BID	NO BID	
W	231	REPAIR CLAMP; SMITH BLAIR	18" X 20" FL CIR (19.23-19.98)	228-20192320-000		EA	2	NO BID	NO BID	
W	232	REPAIR CLAMP; SMITH BLAIR	20" X 20" (21.52-22.27)	228-20215220-000		EA	2	NO BID	NO BID	
W	233	REPAIR CLAMP; SMITH BLAIR	24" X 30" FL CIR (25.70-26.80)	228-30257030-000		EA	2	NO BID	NO BID	
W	234	REPAIR CLAMP; SMITH BLAIR	24" X 20" FL CIR (25.70-26.80)	228-30257020-000		EA	2	NO BID	NO BID	
W	237	REPAIR CLAMP; SMITH BLAIR W/1" CC TAP	6"X7.5" W/1" TAP (6.84-7.24)	238-00069007-009		EA	2	NO BID	NO BID	
W	238	REPAIR CLAMP; SMITH BLAIR W/1" CC TAP	8"X7.5" W/ 1" TAP (8.99-9.39)	238-00090507-009						

WATER	ITEM #	DESCRIPTION	SIZE	APPROVED PART #	ALTERNATE PART #	UNIT	EST. QTY. FY 26/27	BIDDER	UNIT PRICE	ESTIMATED DELIVERY TIME
		HYMAX								
W	240	HYMAX; KRAUSZ	1.5" (1.61-2.13)	860-56-0041-16		EA	4	NO BID	NO BID	
W	241	HYMAX; KRAUSZ	2" (2.10-3.03)	860-56-0054-16		EA	4	NO BID	NO BID	
W	242	HYMAX; KRAUSZ	3" (3.46-4.33)	860-56-0088-16		EA	4	NO BID	NO BID	
W	243	HYMAX; KRAUSZ	4" (4.25-5.63)	860-56-0108-16C		EA	4	NO BID	NO BID	
W	244	HYMAX; KRAUSZ	6" (6.42-7.68)	860-56-0163-16		EA	10	NO BID	NO BID	
W	245	HYMAX; KRAUSZ	8" (8.54-9.84)	860-56-0217-16		EA	10	NO BID	NO BID	
W	246	HYMAX; KRAUSZ	10" (10.70 - 12.00)	860-56-0272-16		EA	2	NO BID	NO BID	

WATER MATERIALS BID LIST 2025-2026

WATER	ITEM #	DESCRIPTION	SIZE	APPROVED PART #	ALTERNATE PART #	UNIT	EST. QTY. FY 26/27	BIDDER	UNIT PRICE	ESTIMATED DELIVERY TIME
W	247	HYMAX; KRAUSZ	12" (12.40-13.66)	860-56-0315-16		EA	2	NO BID	NO BID	
		PIPE								
W	254	PEX PIPE; REHAU 300 ft. Roll	3/4"	261056-100	n/a	FT	2000	NO BID	NO BID	
W	255	PEX PIPE; REHAU 300 ft. roll	1"	261076-300	n/a	FT	4000	NO BID	NO BID	
W	256	PEX PIPE; REHAU 300 ft. roll	2"		n/a	FT	300	NO BID	NO BID	
W	258	CL-350 DUCTILE IRON WATER PIPE W/ BITUMINOUS SEAL COATING INSIDE & OUTSIDE	3"	CL-350	n/a	FT	60	NO BID	NO BID	
W	263	CL-350 DUCTILE IRON WATER PIPE W/ BITUMINOUS SEAL COATING INSIDE & OUTSIDE	12"	CL-350	n/a	FT	40	NO BID	NO BID	
W	264	CL-350 DUCTILE IRON WATER PIPE W/ BITUMINOUS SEAL COATING INSIDE & OUTSIDE	16"	CL-350	n/a	FT	40	NO BID	NO BID	
W	265	CL-350 DUCTILE IRON WATER PIPE W/ BITUMINOUS SEAL COATING INSIDE & OUTSIDE	18"	CL-350	n/a	FT	40	NO BID	NO BID	
W	266	CL-350 DUCTILE IRON WATER PIPE W/ BITUMINOUS SEAL COATING INSIDE & OUTSIDE	24"	CL-350	n/a	FT	40	NO BID	NO BID	
W	267	CL-350 DUCTILE IRON WATER PIPE W/ BITUMINOUS SEAL COATING INSIDE & OUTSIDE	36"	CL-350	n/a	FT	40	NO BID	NO BID	
W	268	C900 WATER PIPE SDR 14	4"	C-900		FT	100	NO BID	NO BID	
W	269	C900 WATER PIPE SDR 14	6"	C-900		FT	200	NO BID	NO BID	
W	270	C900 WATER PIPE SDR 14	8"	C-900		FT	200	NO BID	NO BID	
W	271	C900 WATER PIPE SDR 14	10"	C-900		FT	40	NO BID	NO BID	
W	273	SDR 11, 2" IPS BLACK WATER PIPE	2"	SDR-11		FT	100	NO BID	NO BID	

WATER	ITEM #	DESCRIPTION	SIZE	APPROVED PART #	ALTERNATE PART #	UNIT	EST. QTY. FY 26/27	BIDDER	UNIT PRICE	ESTIMATED DELIVERY TIME
		PIPE FITTINGS								
W	277	PIPE STIFFENER (PLASTIC)	3/4"			EA	1000	NO BID	NO BID	
W	278	PIPE STIFFENER (PLASTIC)	1"			EA	2000	NO BID	NO BID	
W	279	PIPE INSERT; FORD # 55 STAINLESS STELL	2"			EA	14	NO BID	NO BID	
W	293	CAP; TYLER	2"			EA	2	NO BID	NO BID	
W	294	CAP; TYLER	3"			EA	2	NO BID	NO BID	
W	295	CAP; TYLER	4"			EA	2	NO BID	NO BID	
W	296	CAP; TYLER	4" X 2"			EA	2	NO BID	NO BID	
W	297	CAP; TYLER	6"			EA	2	NO BID	NO BID	
W	298	CAP; TYLER	6" X 2"			EA	2	NO BID	NO BID	
W	299	CAP; TYLER	8"			EA	2	NO BID	NO BID	
W	300	CAP; TYLER	8" X 2"			EA	2	NO BID	NO BID	
W	345	ANCHOR COUPLING; TYLER	6" X 13" LONG			EA	6	NO BID	NO BID	
W	346	ANCHOR COUPLING; TYLER	6" X 18" LONG			EA	6	NO BID	NO BID	
W	347	ANCHOR COUPLING; TYLER	6" X 24" LONG			EA	6	NO BID	NO BID	

WATER	ITEM #	DESCRIPTION	SIZE	APPROVED PART #	ALTERNATE PART #	UNIT	EST. QTY. FY 26/27	BIDDER	UNIT PRICE	ESTIMATED DELIVERY TIME
		ACCESSORIES								
W	389	M.J. ACC KIT; UFCO	3"	912-096-5892		EA	4	NO BID	NO BID	
W	390	M.J. ACC KIT; SIGMA	4"	DGP 4"		EA	5	NO BID	NO BID	
W	391	M.J. BOLT PACK SET	6"	SIP 6"		EA	10	NO BID	NO BID	
W	392	M.J. BOLT PACK SET	8"	SIP 8"		EA	4	NO BID	NO BID	
W	393	M.J. ACC KIT; SIGMA	10"	DGP 10		EA	2	NO BID	NO BID	
W	394	M.J. ACC KIT	12"			EA	4	NO BID	NO BID	
W	395	M.J. ACC KIT	16"			EA	4	NO BID	NO BID	
W	397	TRANSITION GASKET	4"			EA	4	NO BID	NO BID	
W	398	TRANSITION GASKET	6"			EA	8	NO BID	NO BID	
W	399	TRANSITION GASKET	8"			EA	6	NO BID	NO BID	
W	400	MEGALUG D. I.; FORD	3"	UFR 1500-SA-3-I		EA	4	NO BID	NO BID	
W	401	MEGALUG AND ACC KIT (D I); SIGMA	4"	829,805,219,567		EA	4	NO BID	NO BID	
W	402	MEGALUG AND ACC KIT (D I); SIGMA	6"	UFR 1400-DA-6		EA	4	NO BID	NO BID	
W	403	MEGALUG AND ACC KIT (D I); EBAA	8"	110 804 1903		EA	2	NO BID	NO BID	
W	404	MEGALUG AND ACC KIT (D I); EBAA	10"	1,110,041,903		EA	2	NO BID	NO BID	
W	405	MEGALUG AND ACC KIT (D I); FORD	12"	UFR 1400-DA-12-I		EA	2	NO BID	NO BID	
W	406	MEGALUG AND ACC KIT (D I)	16"			EA	4	NO BID	NO BID	
W	407	MEGALUG AND ACC KIT (D I)	24"			EA	2	NO BID	NO BID	

WATER MATERIALS BID LIST 2025-2026

W	465	M&H EXTENSION KIT	5 1/4" X 24"	441129-5-24		EA	1	NO BID	NO BID	
WATER	ITEM #	DESCRIPTION	SIZE	APPROVED PART #	ALTERNATE PART #	UNIT	EST. QTY. FY 26/27	BIDDER	UNIT PRICE	ESTIMATED DELIVERY TIME
		INSERT VALVE & SLEEVES								
W	480	INSERT VALVE & SLEEVE W/ INSTALLATION	6"	HYDRO-STOP INSTA-VALVE 250 PATROIT	ROMAC	EA	1	NO BID	NO BID	
W	481	INSERT VALVE & SLEEVE W/ INSTALLATION	8"	HYDRO-STOP INSTA-VALVE 250 PATROIT	ROMAC	EA	1	NO BID	NO BID	
W	482	INSERT VALVE & SLEEVE W/ INSTALLATION	10"	HYDRO-STOP INSTA-VALVE 250 PATROIT	ROMAC	EA	1	NO BID	NO BID	
W	483	INSERT VALVE &SLEEVE W/ INSTALLATION	12"	HYDRO-STOP INSTA-VALVE 250 PATROIT	ROMAC	EA	1	NO BID	NO BID	
W	484	INSERT VALVE & SLEEVE W/ INSTALLATION	16"	HYDRO-STOP INSTA-VALVE 250 PATROIT		EA	1	NO BID	NO BID	

APPENDIX



WATER MATERIALS BID LIST 2025-2026

WATER	ITEM #	DESCRIPTION	SIZE	APPROVED PART #	ALTERNATE PART #	UNIT	EST. QTY. FY 26/27	BIDDER	UNIT PRICE	ESTIMATED DELIVERY TIME
		REPAIR CLAMPS								
W	188	REPAIR CLAMP; SMITH BLAIR	3/4" X 6" FL CIR			EA	2	NO BID	NO BID	
W	189	REPAIR CLAMP; SMITH BLAIR	1" X 6" FL CIR (PVC)	244-00013206-000		EA	2	NO BID	NO BID	
W	190	REPAIR CLAMP; SMITH BLAIR	1-1/4" X 6"	244-00016609-000		EA	4	NO BID	NO BID	
W	191	REPAIR CLAMP; SMITH BLAIR	1.5" X 6" FL CIR (PVC)	244-00019006-000		EA	4	NO BID	NO BID	
W	192	REPAIR CLAMP; SMITH BLAIR	2" X 7" FL CIR (2.35-2.63)	226-00023807-000		EA	8	NO BID	NO BID	
W	193	REPAIR CLAMP; SMITH BLAIR	2.5" X 7" FL CIR (2.70-3.00)	226-00027507-000		EA	6	NO BID	NO BID	
W	194	REPAIR CLAMP; SMITH BLAIR	2" X 12.5" FL CIR (2.35-2.63)	226-00023812-000		EA	2	NO BID	NO BID	
W	195	REPAIR CLAMP; SMITH BLAIR	2.5" X 12" FL CIR (2.70-3.00)	226-00027512-000		EA	2	NO BID	NO BID	
W	196	REPAIR CLAMP; SMITH BLAIR	2" X 15" (2.35-2.63)	226-00023815-000		EA	2	NO BID	NO BID	
W	197	REPAIR CLAMP; SMITH BLAIR	2" X 25" (2.35-2.63)	226-00023825-000		EA	2	NO BID	NO BID	
W	198	REPAIR CLAMP; SMITH BLAIR	2.25" X 25" (2.70-3.00)	226-00027525-000		EA	2	NO BID	NO BID	
W	199	REPAIR CLAMP; SMITH BLAIR	3" X 7.5" FL CIR (3.73-4.00)	226-00037507-000		EA	2	NO BID	NO BID	
W	200	REPAIR CLAMP; SMITH BLAIR	3" X 12" FL CIR (3.46-3.70)	226-00035012-000		EA	2	NO BID	NO BID	
W	201	REPAIR CLAMP; SMITH BLAIR	4" X 7.5" FL CIR (3.96-4.25)	226-00040007-000		EA	2	NO BID	NO BID	
W	202	REPAIR CLAMP; SMITH BLAIR	4" X 7.5" FL CIR (4.45-4.73)	226-00045007-000		EA	2	NO BID	NO BID	
W	203	REPAIR CLAMP; SMITH BLAIR	4" X 7.5" FL CIR (4.74-5.14)	226-00048007-000		EA	6	NO BID	NO BID	
W	204	REPAIR CLAMP; SMITH BLAIR	4 X 12.5" FL CIR (4,74-5,14)	226-00048012-000		EA	2	NO BID	NO BID	
W	205	REPAIR CLAMP; SMITH BLAIR	4 X 15" FL CIR (PVC) (4.74-5.14)	226-00048015-000		EA	2	NO BID	NO BID	
W	207	REPAIR CLAMP; SMITH BLAIR	6" X 7" FL CIR (6.84-7.24)	226-00069007-000		EA	10	NO BID	NO BID	
W	208	REPAIR CLAMP; SMITH BLAIR	6" X 7.5" FL CIR (6.56-6.96)	226-00066307-000		EA	4	NO BID	NO BID	
W	210	REPAIR CLAMP; SMITH BLAIR	6" X 12" FL CIR (6.56-6.96)	226-00066312-000		EA	2	NO BID	NO BID	
W	211	REPAIR CLAMP; SMITH BLAIR	6" X 12" FL CIR (6.84-7.24)	226-00069012-000		EA	4	NO BID	NO BID	
W	212	REPAIR CLAMP; SMITH BLAIR	6" X 12.5" (7.05-7.45)	226-00071012-000		EA	2	NO BID	NO BID	
W	213	REPAIR CLAMP; SMITH BLAIR	6" X 15" FL CIR (6.56-6.96)	226-00066315-000		EA	2	NO BID	NO BID	
W	214	REPAIR CLAMP; SMITH BLAIR	6" X 15" (6.84-7.24)	226-00069015-000		EA	2	NO BID	NO BID	
W	215	REPAIR CLAMP; SMITH BLAIR	6" X 15" (7.05-7.45)	226-00071015-000		EA	2	NO BID	NO BID	
W	217	REPAIR CLAMP; SMITH BLAIR	8" X 7" FL CIR (8.54-8.94)	226-00086307-000		EA	4	NO BID	NO BID	
W	218	REPAIR CLAMP; SMITH BLAIR	8" X 7" FL CIR (8.99-9.39)	226-00090507-000		EA	8	NO BID	NO BID	
W	219	REPAIR CLAMP; SMITH BLAIR	8" X 12" FL CIR (8.99-9.39, DIP)	226-00090512-000		EA	2	NO BID	NO BID	
W	220	REPAIR CLAMP; SMITH BLAIR	8" X 15" (8.54-8.94)	226-00086315-000		EA	2	NO BID	NO BID	
W	221	REPAIR CLAMP; SMITH BLAIR	8" X 15" (8.99-9.39)	226-00090515-000		EA	2	NO BID	NO BID	
W	222	REPAIR CLAMP; SMITH BLAIR	10" X 15" FL CIR (DIP) (11.04-11.44)	226-00111015-000		EA	2	NO BID	NO BID	
W	223	REPAIR CLAMP; SMITH BLAIR	10" X 20" (11.04-11.44)	226-00114020-000		EA	2	NO BID	NO BID	
W	224	REPAIR CLAMP; SMITH BLAIR	12" X 7" FL CIR (13.10-13.50)	226-00132007-000		EA	2	NO BID	NO BID	
W	225	REPAIR CLAMP; SMITH BLAIR	12" X 12" FL CIR (DIP) (13.10-13.50)	226-00132012-000		EA	2	NO BID	NO BID	
W	226	REPAIR CLAMP; SMITH BLAIR	12' X 15' FL CIR (DIP) (13.10 - 13.50)	226-00132015-000		EA	2	NO BID	NO BID	
W	227	REPAIR CLAMP; SMITH BLAIR	16" X 15" (17.15-17.90)	228-20171515-000		EA	2	NO BID	NO BID	
W	229	REPAIR CLAMP; SMITH BLAIR	16" X 20" FL CIR (17.15-17.90)	228-20178220-000		EA	2	NO BID	NO BID	
W	230	REPAIR CLAMP; SMITH BLAIR	16" X 30" (17.15-17.90)	228-20171530-000		EA	2	NO BID	NO BID	
W	231	REPAIR CLAMP; SMITH BLAIR	18" X 20" FL CIR (19.23-19.98)	228-20192320-000		EA	2	NO BID	NO BID	
W	232	REPAIR CLAMP; SMITH BLAIR	20" X 20" (21.52-22.27)	228-20215220-000		EA	2	NO BID	NO BID	
W	233	REPAIR CLAMP; SMITH BLAIR	24" X 30" FL CIR (25.70-26.80)	228-30257030-000		EA	2	NO BID	NO BID	
W	234	REPAIR CLAMP; SMITH BLAIR	24" X 20" FL CIR (25.70-26.80)	228-30257020-000		EA	2	NO BID	NO BID	
W	237	REPAIR CLAMP; SMITH BLAIR W/1" CC TAP	6"X7.5" W/1" TAP (6.84-7.24)	238-00069007-009		EA	2	NO BID	NO BID	
W	238	REPAIR CLAMP; SMITH BLAIR W/1" CC TAP	8"X7.5" W/ 1" TAP (8.99-9.39)	238-00090507-009						

WATER	ITEM #	DESCRIPTION	SIZE	APPROVED PART #	ALTERNATE PART #	UNIT	EST. QTY. FY 26/27	BIDDER	UNIT PRICE	ESTIMATED DELIVERY TIME
		HYMAX								
W	240	HYMAX; KRAUSZ	1.5" (1.61-2.13)	860-56-0041-16		EA	4	NO BID	NO BID	
W	241	HYMAX; KRAUSZ	2" (2.10-3.03)	860-56-0054-16		EA	4	NO BID	NO BID	
W	242	HYMAX; KRAUSZ	3" (3.46-4.33)	860-56-0088-16		EA	4	NO BID	NO BID	
W	243	HYMAX; KRAUSZ	4" (4.25-5.63)	860-56-0108-16C		EA	4	NO BID	NO BID	
W	244	HYMAX; KRAUSZ	6" (6.42-7.68)	860-56-0163-16		EA	10	NO BID	NO BID	
W	245	HYMAX; KRAUSZ	8" (8.54-9.84)	860-56-0217-16		EA	10	NO BID	NO BID	
W	246	HYMAX; KRAUSZ	10" (10.70 - 12.00)	860-56-0272-16		EA	2	NO BID	NO BID	

PRODUCT DATA SHEETS



Recordall®
RCDL | Mechanical Flow Meters

Recordall® Disc Meters

Lead-Free Bronze Alloy, Sizes 5/8, 5/8 x 3/4, 3/4 & 1 inch
NSF/ANSI/CAN Standards 61 and 372 Certified



Model 25—5/8 in., 5/8 × 3/4 in.



Model 35—3/4 in.



Model 55—1 in.



Model 70—1 in.

DESCRIPTION

The Recordall Disc Series meters meet or exceed the most recent revision of AWWA Standard C700 and are available in a lead-free bronze alloy. The meters comply with the lead-free provisions of the Safe Drinking Water Act, are certified to NSF/ANSI/CAN Standards 61 and 372 (Trade Designations: M25-LL, M35-LL, M55-LL, M70-LL) and carry the NSF-61 mark on the housing. All components of the lead-free bronze alloy meter (housing, measuring element, seals, and so on) comprise the certified system.

Applications: For use in measurement of potable cold water in residential, commercial and industrial services where flow is in one direction only.

Operation: Water flows through the meter's strainer and into the measuring chamber where it causes the disc to nutate. The disc, which moves freely, nutates on its own ball, guided by a thrust roller. A drive magnet transmits the motion of the disc to a follower magnet located within the permanently sealed register. The follower magnet is connected to the register gear train. The gear train reduces the disc nutations into volume totalization units displayed on the register or encoder face.

Operating Performance: The Recordall Disc Series meters meet or exceed registration accuracy for the low flow rates (95%), normal operating flow rates (100 ±1.5%), and maximum continuous operation flow rates as specifically stated in AWWA Standard C700.

Construction: Recordall Disc meter construction, which complies with ANSI/AWWA standard C700, consists of three basic components: meter housing, measuring chamber and permanently sealed register or encoder. The meter is available in a lead-free bronze alloy with externally threaded spuds. A corrosion-resistant engineered polymer material is used for the measuring chamber.

Magnetic Drive: Direct magnetic drive, through the use of high-strength magnets, provides positive, reliable and dependable register coupling for straight-reading or AMR/AMI meter reading options.

Tamper-Proof Features: Unauthorized removal of the register or encoder is inhibited by the option of a tamper detection seal wire screw, TORX® tamper-resistant seal screw or the proprietary tamper-resistant keyed seal screw. Each can be installed at the meter site or at the factory.

Maintenance: Badger Meter Recordall Disc Series meters are designed and manufactured to provide long-term service with minimal maintenance. When maintenance is required, it can be performed easily either at the meter installation or at any other convenient location.

To simplify maintenance, the register, measuring chamber, and strainer can be replaced without removing the meter housing from the installation. No change gears are required for accuracy calibration. Interchangeability of parts among like-sized meters and meter models also minimizes spare parts inventory investment. The built-in strainer has an effective straining area of twice the inlet size.

Connections: Tailpieces/Unions for installations of meters on various pipe types and sizes, including misaligned pipes, are available as an option.

Meter Spud and Connection Sizes

Model	Size Designation (in.)	×	"L" Laying Length (in.)	"B" Bore Dia. (in.)	Coupling Nut and Spud Thread (in.)	Tailpiece Pipe Thread (NPT) (in.)
25	5/8	×	7-1/2	5/8	3/4 (5/8)	1/2
	5/8 x 3/4	×	7-1/2	5/8, 3/4	1 (3/4)	3/4
35	3/4	×	7-1/2	3/4	1 (3/4)	3/4
	3/4	×	9	3/4	1 (3/4)	3/4
	3/4 x 1	×	9	3/4	1-1/4 (1)	1
55	1	×	10-3/4	1	1-1/4 (1)	1
70	1	×	10-3/4	1	1-1/4 (1)	1

SPECIFICATIONS

	Model 25 (5/8 in. & 5/8 × 3/4 in.)	Model 35 (3/4 in.)	Model 55 (1 in.)	Model 70 (1 in.)
Typical Operating Range (100% ±1.5%)	0.5…25 gpm (0.11…5.7 m³/hr)	0.75…35 gpm (0.17…7.9 m³/hr)	1…55 gpm (0.23…12.5 m³/hr)	1.25…70 gpm (0.28…16 m³/hr)
Low Flow	0.25 gpm (0.057 m³/hr) Min. 98.5%	0.375 gpm (0.085 m³/hr) Min. 97%	0.5 gpm (0.11 m³/hr) Min. 95%	0.75 gpm (0.17 m³/hr) Min. 95%
Maximum Continuous Operation	15 gpm (3.4 m³/hr)	25 gpm (5.7 m³/hr)	40 gpm (9.1 m³/hr)	50 gpm (11.3 m³/hr)
Pressure Loss at Maximum Continuous Operation	**5/8 in. size:** 3.5 psi @ 15 gpm (0.24 bar @ 3.4 m³/hr) **5/8 × 3/4 in. size:** 2.8 psi @ 15 gpm (0.19 bar @ 3.4 m³/hr)	5 psi @ 25 gpm (0.37 bar @ 5.7 m³/hr)	3.4 psi @ 40 gpm (0.23 bar @ 9.1 m³/hr)	6.5 psi @ 50 gpm (0.45 bar @ 11.3 m³/hr)
Maximum Operating Temperature	80° F (26° C)			
Maximum Operating Pressure	150 psi (10 bar)			
Measuring Element	Nutating disc, positive displacement			
Meter Connections	*Available in NL bronze and engineered polymer to fit spud thread bore diameter sizes:*			
	5/8 in. size: 5/8 in. (DN 15 mm) **5/8 × 3/4 in. size:** 3/4 in. (DN 15 mm)	3/4 in. (DN 20 mm)	1 in. (DN 25 mm)	1 in. (DN 25 mm)

MATERIALS

	Model 25 (5/8 in. & 5/8 × 3/4 in.)	Model 35 (3/4 in.)	Model 55 (1 in.)	Model 70 (1 in.)
Meter Housing	Lead-free bronze alloy			
Housing Bottom Plates	Cast iron, lead-free bronze alloy, engineered polymer	Cast iron, lead-free bronze alloy		
Measuring Chamber	Engineered polymer			
Disc	Engineered polymer			
Trim	Stainless steel			
Strainer	Engineered polymer			
Disc Spindle	Stainless steel	Stainless steel	Engineered polymer	Stainless steel
Magnet	Ceramic	Ceramic	Ceramic	Ceramic
Magnet Spindle	Engineered polymer	Engineered polymer	Engineered polymer	Stainless steel
Register Lid and Shroud	Engineered polymer, bronze			

DIMENSIONS

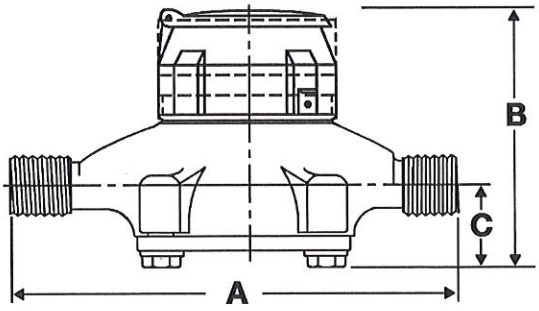

Meter Size	Model	A Laying Length	B Height Reg.	C Centerline Base	Width	Approx. Shipping Weight
5/8 in. (15 mm)	25	7-1/2 in. (190 mm)	4-15/16 in. (125 mm)	1-11/16 in. (42 mm)	4-1/4 in. (108 mm)	4-1/2 lb (2 kg)
5/8 in. × 3/4 in. (15 mm)		7-1/2 in. (190 mm)	4-15/16 in. (125 mm)	1-11/16 in. (42 mm)	4-1/4 in. (108 mm)	4-1/2 lb (2 kg)
3/4 in. (20 mm)	35	7-1/2 in. (190 mm)	5-1/4 in. (133 mm)	1-5/8 in. (41 mm)	5 in. (127 mm)	5-1/2 lb (2.5 kg)
3/4 in. (20 mm)		9 in. (229 mm)	5-1/4 in. (133 mm)	1-5/8 in. (41 mm)	5 in. (127 mm)	5-3/4 lb (2.6 kg)
3/4 in. × 1 in. (20 mm)		9 in. (229 mm)	5-1/4 in. (133 mm)	1-5/8 in. (41 mm)	5 in. (127 mm)	6 lb (2.7 kg)
1 in. (25 mm)	55	10-3/4 in. (273 mm)	6 in. (152 mm)	2-1/32 in. (52 mm)	6-1/4 in. (159 mm)	8-3/4 lb (3.9 kg)
1 in. (25 mm)	70	10-3/4 in. (273 mm)	6-1/2 in. (165 mm)	2-5/16 in. (59 mm)	7-3/4 in. (197 mm)	11-1/2 lb (5.2 kg)

ENCODER / REGISTER

High Resolution Encoders (HR-E®, HR-E® LCD) for AMR/AMI Reading Solutions

High resolution encoder solutions are available for all Recordall Disc Series meters. Badger Meter high resolution encoders provide years of reliable, accurate readings for a variety of applications. See details at ***badgermeter.com***.

Local Register—Mechanical Sweep-Hand Registration

The local register is a straight-reading, permanently sealed magnetic drive register. The register is permanently sealed to eliminate the intrusion of moisture, dirt or other contaminants. The register achieves true water resistance due the unique adhesive technology used to seal the glass dome to the corrosion-resistant metal bottom. Due to this sealing process, the register exceeds all applicable requirements of AWWA Standard C707 and is suitable for installation in all environments, including meter pits subject to continuous submergence.

The local register has a six-odometer wheel totalization display, 360° test circle with center sweep hand, and flow finder to detect leaks. Register gearing is made of self-lubricating engineered polymer, which minimizes friction and provides long life. The multi-position register simplifies meter installation and reading. The register capacity is 10,000,000 gallons (1,000,000 ft³, 100,000 m³).

A Model 25 register is used in the following example:



Model	Gallon	Cubic Feet	Cubic Meter
25 (5/8 in.)	10	1	0.1/0.01
25 (5/8 × 3/4 in.)	10	1	0.1/0.01
35	10	1	0.1
55	10	1	0.1
70	10	1	0.1

PRESSURE LOSS CHARTS

Rate of Flow in Gallons per Minute

Model 25 5/8 in.

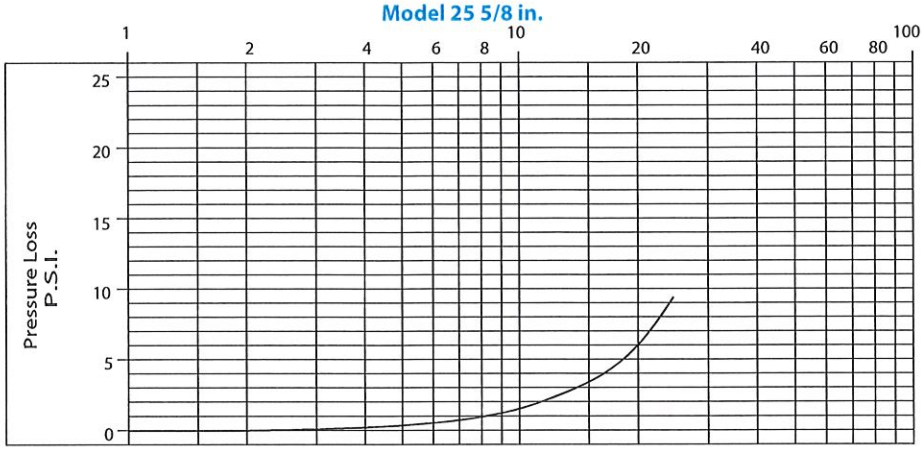

Model 25 5/8 x 3/4 in.

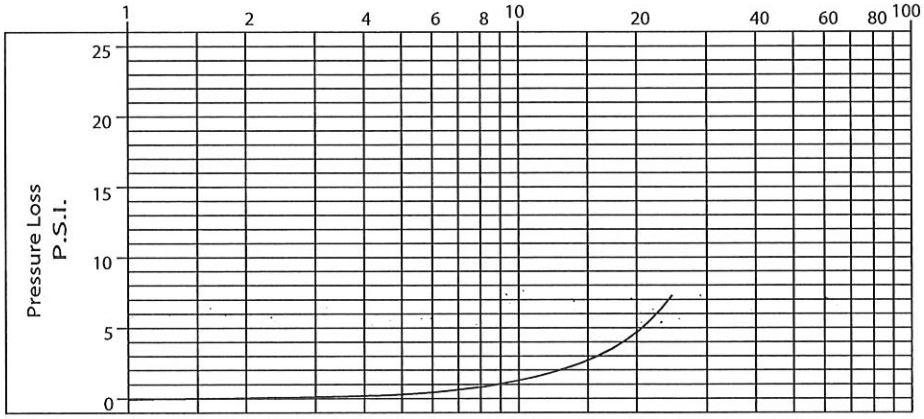

Model 35 3/4 in.

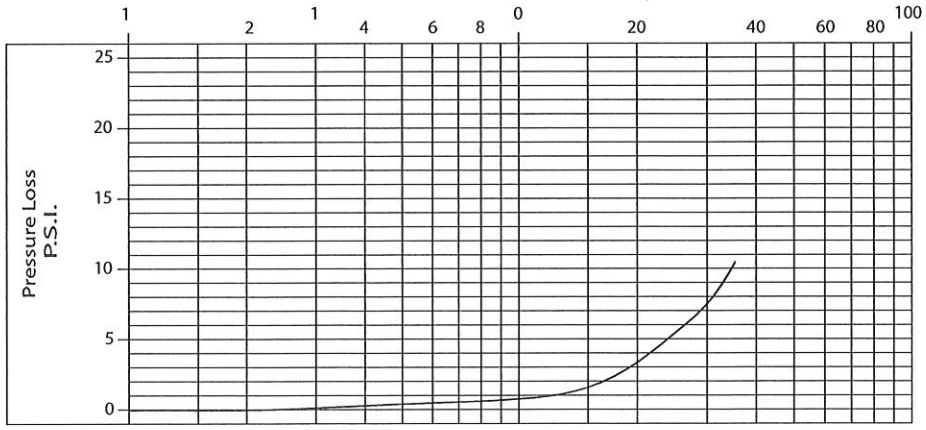

PRESSURE LOSS CHARTS (CONTINUED)

Rate of Flow in Gallons per Minute

Model 55 1 in.

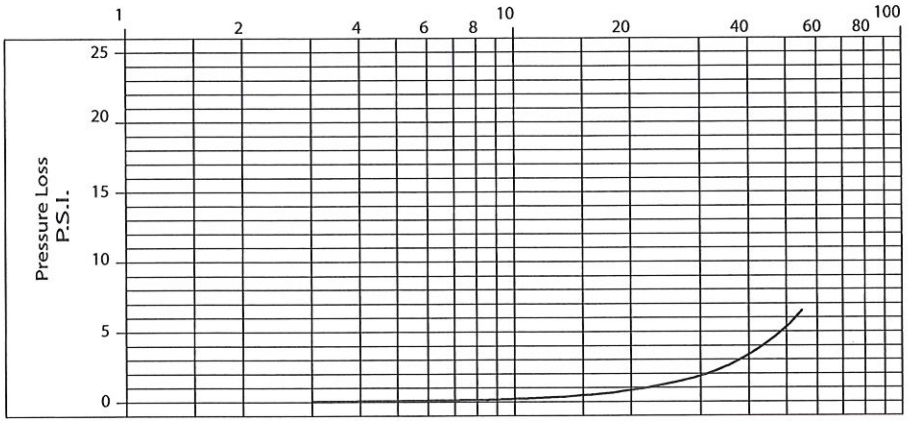

Model 70 1 in.

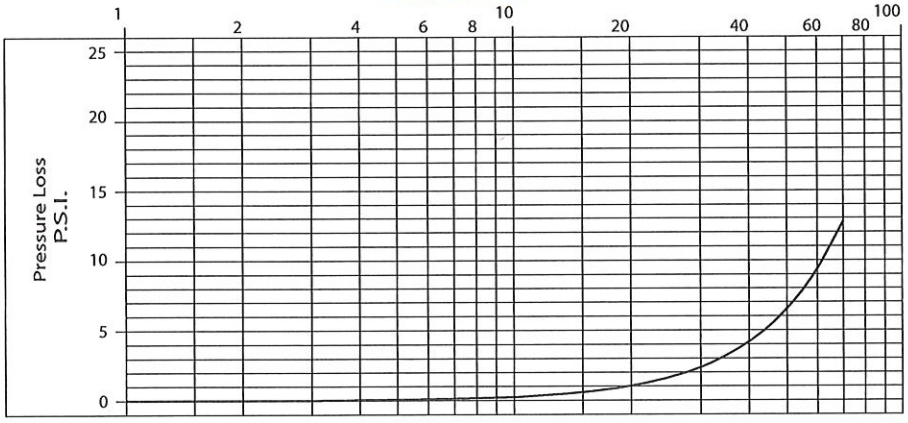

ACCURACY CHARTS

Model 25 5/8 in.

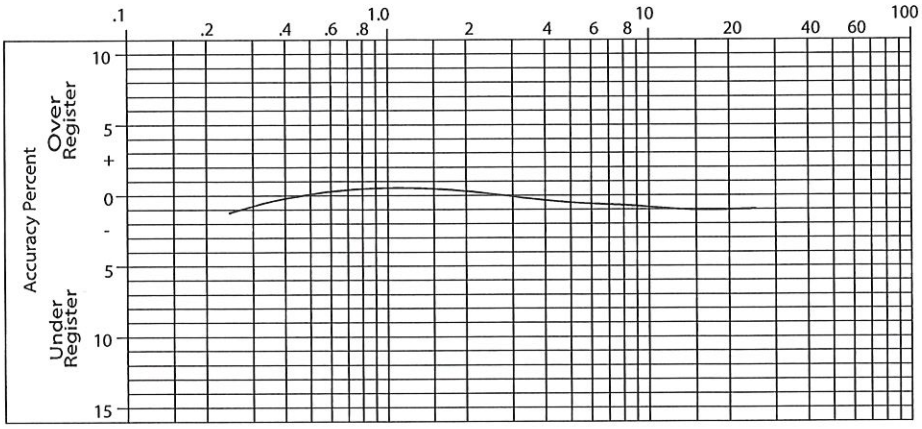

Model 25 5/8 × 3/4 in.

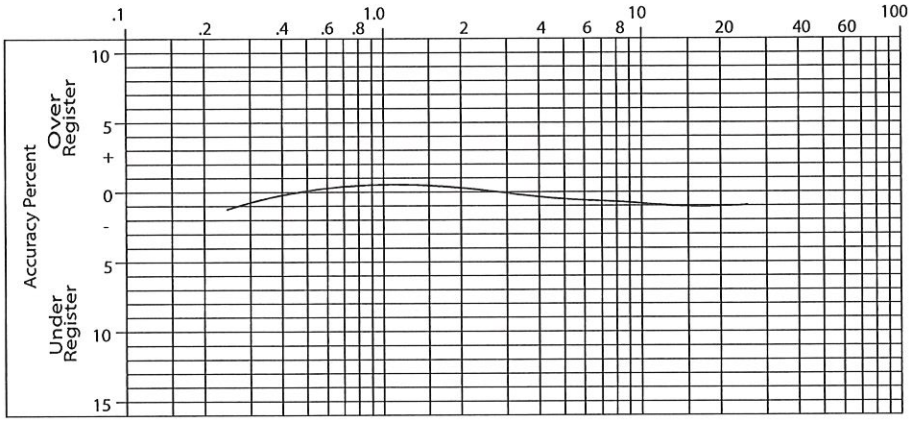

Model 35 3/4 in.

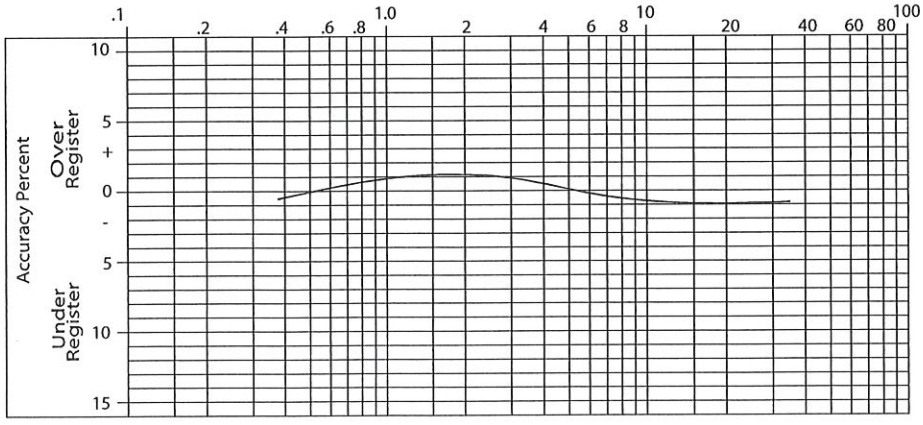

ACCURACY CHARTS (CONTINUED)

Model 55 1 in.

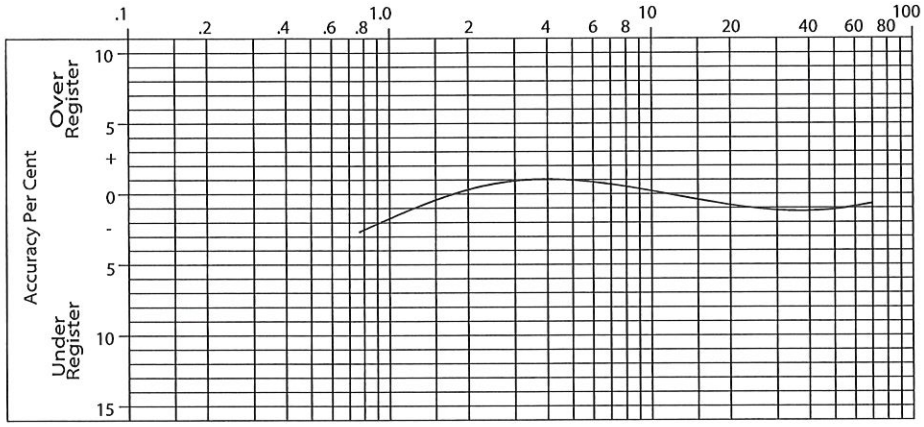

Model 70 1 in.

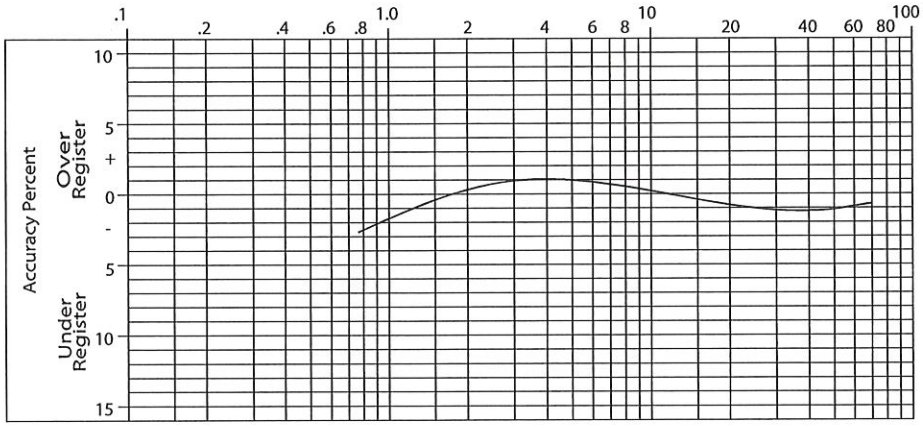

Recordall is a registered trademark of Badger Meter, Inc. Other trademarks appearing in this document are the property of their respective entities. Due to continuous research, product improvements and enhancements, Badger Meter reserves the right to change product or system specifications without notice, except to the extent an outstanding contractual obligation exists. © 2025 Badger Meter, Inc. All rights reserved.

Recordall®
RCDL | Mechanical Flow Meters

Recordall® Disc Meters

Lead-Free Bronze Alloy 120 & 170, Sizes 1-1/2 in. (40 mm) & 2 in. (50 mm), NSF/ANSI/CAN Standards 61 and 372 Certified

DESCRIPTION

Recordall Models 120 and 170 Disc Series meters meet or exceed the most recent revision of AWWA Standard C700 and are available in a lead-free bronze alloy. Both meters comply with the lead-free provisions of the Safe Drinking Water Act, are certified to NSF/ANSI/CAN Standards 61 and 372 (Trade Designations: M120-LL and M170LL) and carry the NSF-61 mark on the housing. All components of the lead-free bronze alloy meter (housing, measuring element, seals, and so on) comprise the certified system.

Applications: For use in measurement of potable cold water in residential, commercial and industrial services where flow is in one direction only.

Operation: Water flows through the meter's strainer and into the measuring chamber where it causes the disc to nutate. The disc, which moves freely, nutates on its own ball, guided by a thrust roller. A drive magnet transmits the motion of the disc to a follower magnet located within the permanently sealed register. The follower magnet is connected to the register gear train. The gear train reduces the disc nutations into volume totalization units displayed on the register or encoder face.

Operating Performance: The Recordall Disc Series meters meet or exceed registration accuracy for the low flow rates (95%), normal operating flow rates (100 ± 1.5%), and maximum continuous operation flow rates as specifically stated in AWWA Standard C700.

Construction: Recordall Disc meter construction, which complies with ANSI/AWWA standard C700, consists of three basic components: meter housing, measuring chamber, and permanently sealed register or encoder. The water meter is available in a lead-free bronze alloy. A corrosion-resistant engineered polymer material is used for the measuring chamber.

Magnetic Drive: Direct magnetic drive, through the use of high-strength magnets, provides positive, reliable and dependable register coupling for straight-reading or AMR/AMI meter reading options.

Tamper-Proof Features: Unauthorized removal of the register or encoder is inhibited by the option of a tamper detection seal wire screw, TORX® tamper-resistant seal screw or the proprietary tamper-resistant keyed seal screw. Each can be installed at the meter site or at the factory.

Maintenance: Badger Meter Recordall Disc Series meters are designed and manufactured to provide long-term service with minimal maintenance. When maintenance is required, it can be performed easily either at the meter installation or at any other convenient location.

To simplify maintenance, the register, measuring chamber, and strainer can be replaced without removing the meter housing from the installation. No change gears are required for accuracy calibration. Interchangeability of parts among like-sized meters minimizes spare parts inventory investment. The built-in strainer has an effective straining area of twice the inlet size.

Connections: Companion flanges in cast iron or NL bronze are available as options. Straight connection sets are available in NL bronze.



M120 M170

SPECIFICATIONS

Meter Model	M120	M170
Typical Operating Range (100% ± 1.5%)	2.5…120 gpm (0.57…27 m³/hr)	2.5…170 gpm (0.57…39 m³/hr)
Low Flow (Min. 95%)	1.25 gpm (0.28 m³/hr)	1.5 gpm (0.34 m³/hr)
Maximum Continuous Operation	80 gpm (18 m³/hr)	100 gpm (23 m³/hr)
Pressure Loss at Maximum Continuous Operation	4.8 psi at 80 gpm (0.33 bar at 18 m³/hr)	3.3 psi at 100 gpm (0.23 bar at 23 m³/hr)
Maximum Operating Temperature	80° F (26° C)	80° F (26° C)
Maximum Operating Pressure	150 psi (10 bar)	150 psi (10 bar)
Measuring Element	Nutating disc, positive displacement	Nutating disc, positive displacement
Meter Connections	1-1/2 in. AWWA two-bolt elliptical flange, drilled or 1-1/2…11-1/2 NPT internal pipe threads	2 in. AWWA two-bolt elliptical flange, drilled or 2…11-1/2 NPT internal pipe threads
Test Plugs	Optional 1 in. NPT test plug (TP)	Optional 1 in. NPT test plug (TP)

Materials

Meter Housing	Lead-free bronze alloy
Housing Top Plates	Lead-free bronze alloy
Measuring Chamber	Engineered polymer
Disc	Engineered polymer
Trim	Stainless steel
Strainer	Engineered polymer
Disc Spindle	Stainless steel
Magnet	Ceramic
Magnet Spindle	Stainless steel
Register Lid and Shroud	Engineered polymer, bronze

DIMENSIONS

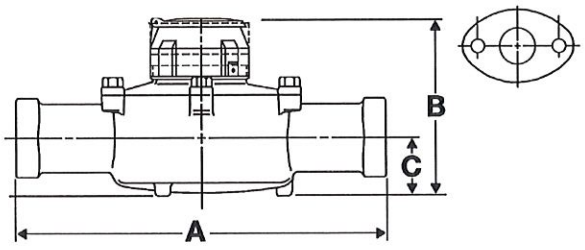

Meter Size	Meter Model	A Laying Length	B Height Reg./RTR	C Centerline Base	Width	Approx. Shipping Weight
1-1/2 in. (40 mm)	120 EL, Hex 120 EL, TP	12-5/8 in. (321 mm)	7 in. (178 mm)	2-3/8 in. (60 mm)	8-3/4 in. (222 mm)	19 lb (8.6 kg)
1-1/2 in. (40 mm)	120 ELL 120 ELL, TP	13 in. (330 mm)	7 in. (178 mm)	2-3/8 in. (60 mm)	8-3/4 in. (222 mm)	19 lb (8.6 kg)
2 in. (50 mm)	170 EL, Hex 170 EL, TP	15-1/4 in. (387 mm)	8 in. (203 mm)	2-7/8 in. (73 mm)	9-1/2 in. (241 mm)	30 lb (13.6 kg)
2 in. (50 mm)	170 ELL 170 ELL, TP	17 in. (432 mm)	8 in. (203 mm)	2-7/8 in. (73 mm)	9-1/2 in. (241 mm)	30 lb (13.6 kg)

EL = Elliptical | ELL = Elliptical Long | Hex = Hexagon, 1-1/2...11-1/2 in. NPT Thread | TP=Test Plug 1 in.

REGISTERS / ENCODERS

Standard—Sweep-Hand Registration

The standard register is a straight-reading, permanently sealed magnetic drive register. Dirt, moisture, tampering and lens fogging problems are eliminated. The register has a six-odometer wheel totalization display, 360° test circle with center sweep hand, and flow finder to detect leaks. Register gearing is made of self-lubricating engineered polymer, which minimizes friction and provides long life. The multi-position register simplifies meter installation and reading. The register capacity is 100,000,000 gallons (10,000,000 ft³, 1,000,000 m³).

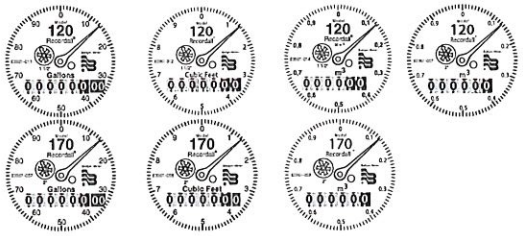

Meter Model	Gallon	Cubic Feet	Cubic Meter
120	100	10	1/0.1
170	100	10	1

Optional—Encoders for AMR/AMI Reading Solutions

AMR/AMI solutions are available for all Recordall Disc Series meters. All reading options can be removed from the meter without disrupting water service. Badger Meter encoders provide years of reliable, accurate readings for a variety of applications and are also available pre-wired to Badger Meter approved AMR/AMI solutions. See details at *badgermeter.com*.

PRESSURE LOSS CHARTS

1-1/2 in. Meter

Rate of Flow in Gallons per Minute

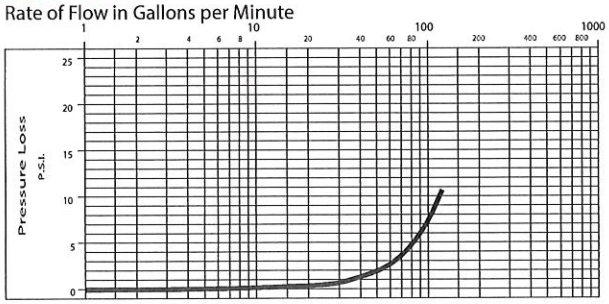

2 in. Meter

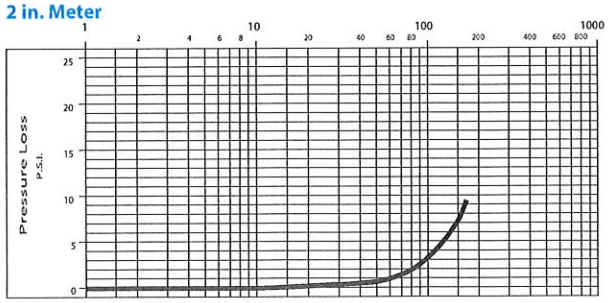

ACCURACY CHARTS

1-1/2 in. Meter

Rate of Flow in Gallons per Minute

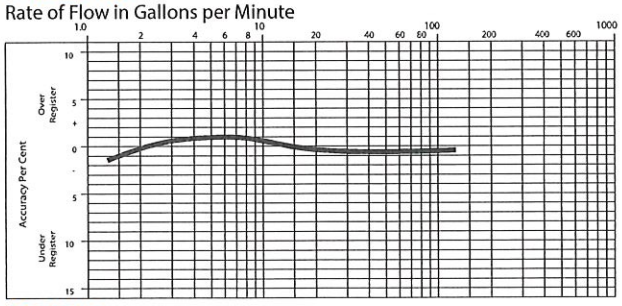

2 in. Meter

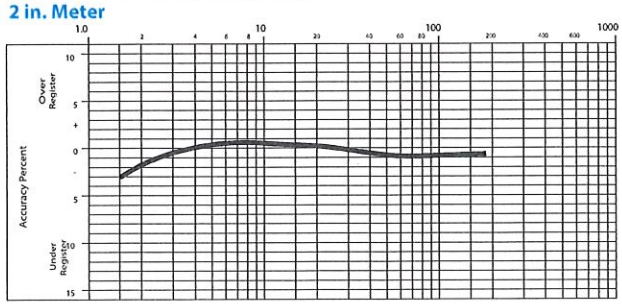

SMART WATER IS *BADGER METER*

Recordall is a registered trademark of Badger Meter, Inc. Other trademarks appearing in this document are the property of their respective entities. Due to continuous research, product improvements and enhancements, Badger Meter reserves the right to change product or system specifications without notice, except to the extent an outstanding contractual obligation exists. © 2024 Badger Meter, Inc. All rights reserved.

www.badgermeter.com

Legacy Document Numbers: RDM-DS-00071-EN and RDM-DS-00072-EN

Badger Meter | HR-E High Resolution Encoder

DESCRIPTION

Applications: The High Resolution Encoder (HR-E) is designed for use with all current Recordall® Disc, Turbo, Compound, Combo and Fire Series meters and assemblies. The HR-E provides connectivity with Badger Meter ORION® and GALAXY® AMR/AMI endpoints, BadgerTouch® modules and other AMR/AMI technology solutions approved by Badger Meter.

Electronic Resolution: Encoder output from the HR-E includes eight-dial resolution to AMR/AMI endpoints and the option of four, five, six, seven or eight-dial resolution for touch applications. Refer to tables on the next page for details.

Mounting: The HR-E in its shroud assembly uses a bayonet mount compatible with all Recordall Disc, Turbo, Compound and Fire Series meters and assemblies. The bayonet mount allows positioning of the register in any of four orientations for visual reading convenience. The HR-E can be removed from the meter without disrupting water service.

Magnetic Drive: A direct-drive, high-strength magnetic coupling, through the meter body to the wetted magnet, provides reliable and dependable register coupling.

Local Indication: The HR-E face features an eight-dial mechanical odometer wheel stack and a flow finder with a calibrated test circle.

Tamper-Resistant Features: Unauthorized removal of the HR-E is inhibited by the option of a tamper detection seal wire screw, tamper-resistant TORX® seal screw, or the proprietary tamper-resistant keyed seal screw. Each can be installed at the meter site or at the factory.

Construction: The housing of the HR-E is constructed of a strengthened glass lens top and a corrosion-resistant metal bottom. Internal construction materials are thermoplastic for long life and high reliability. The encoder gearing is self-lubricating thermoplastic to minimize friction and provide long, reliable life. The shroud assembly is thermoplastic.

Temperature: The operating range of the HR-E is – 40…140° F (– 40…60° C). The water meter should not be subjected to temperatures below freezing.

Sealing: The HR-E encoder is permanently sealed to eliminate the intrusion of moisture, dirt or other contaminants. The HR-E achieves true water resistance due the unique adhesive technology used to seal the glass dome to the corrosion-resistant metal bottom. Due to this sealing process, the HR-E exceeds all applicable requirements of AWWA Standard C707. With leak rates less than 10-6 cc/sec, as tested by a helium mass spectrometer, the HR-E is suitable for installation in all environments, including meter pits subject to continuous submergence.

Electrical: The electronic circuitry is designed to provide immunity to electrical surges and transients per IEC1000-4-2, IEC1000-4-4. Operation of the HR-E is dependent on the wire length limitations of connected AMR/AMI equipment.



SPECIFICATIONS

Encoder Type	Straight reading, permanently sealed, magnetic drive
Unit of Measure	U.S. Gallons, Cubic Feet, Cubic Meters, clearly identified on encoder face
Number Wheels	Eight with 5/32 inch high numerals
Test Circle	360° circle with ten major increments, ten divisions each
Weight	10 ounces
Humidity	0…100% condensing when equipped with potted lead wire, 0…95% non-condensing with screw-terminal wire connections
Temperature	– 40…140° F (– 40…60° C)
Signal Output	Industry Standard ASCII Format
Visual Resolution	1/100th of Test Circle
Electronic Resolution	8-dial resolution for AMR/AMI; 4, 5, 6, 7 or 8-dial resolution for BadgerTouch
Signal Type	3-wire synchronous for AMR/AMI solutions (red=clock/power, black=ground, green=data) 2-wire asynchronous for Touch solutions
Power Source	External

Operating Characteristics: The reading obtained by an AMR/AMI device is sensed directly from the position of the encoder's odometer using internal LED light paths to determine the exact position of each number wheel. This technology eliminates electromechanical contacts that could wear out, and provides greater long-term performance.

Wire Connections: The HR-E is available with an in-line connector for easy connection and installation to AMR/AMI endpoints. It is also available with a flying lead for a field splice connection or fully prewired to an AMR/AMI endpoint. A terminal screw version of the HR-E is also available. This version features a tamper-resistant cap over the three-wire terminals. The HR-E with terminal screws is designed for indoor installations in protected environments such as residential basements.

Product Data Sheet

DIMENSIONAL DRAWINGS

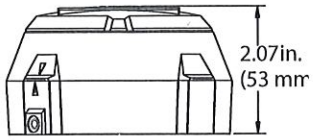

Side view

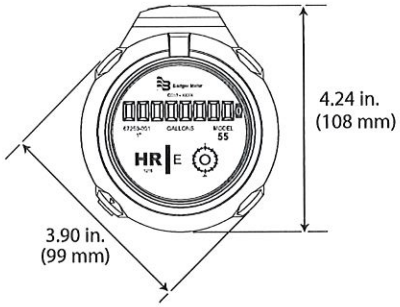

With wire lead

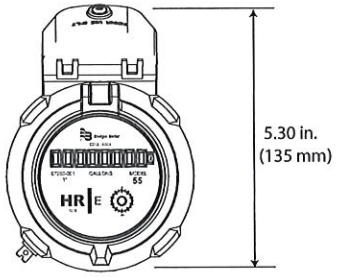

With terminal screws

Top view

MEASUREMENT RESOLUTION

The minimum electronic resolution of the HR-E is as noted below (8-Dial Reading). To verify the correct resolution for your application, contact Badger Meter Customer Service.

Recordall Disc Series	Size (in.)	8-Dial Resolution (gal)	8-Dial Resolution (ft^3)	8-Dial Resolution (m^3)
M25/MLP	5/8	0.1	0.01	0.001
M25/MLP	3/4	0.1	0.01	0.001
M35	3/4	0.1	0.01	0.001
M40	1	0.1	0.01	0.001
M55	1	0.1	0.01	0.001
M70	1	0.1	0.01	0.001
M120	1-1/2	1	0.1	0.01
M170	2	1	0.1	0.01

Fire Service Series	8-Dial Resolution (gal)	8-Dial Resolution (ft^3)	8-Dial Resolution (m^3)
3 in.	1	0.1	0.01
4 in.	1	0.1	0.01
6 in.	10	1	0.1
8 in.	10	1	0.1
10 in.	10	1	0.1

Recordall Turbo Series	Size (in.)	8-Dial Resolution (gal)	8-Dial Resolution (ft^3)	8-Dial Resolution (m^3)
T160	1-1/2	1	0.1	0.01
T200	2	1	0.1	0.01
T450	3	1	0.1	0.01
T1000	4	1	0.1	0.01
T2000	6	10	1	0.1
T3500	8	10	1	0.1
T5500	10	10	1	0.1
T6200	12	100	10	0.1
T6600	16	100	10	1
T10000	20	100	100	1

Recordall Compound Series	Size (in.)	8-Dial Resolution (gal)	8-Dial Resolution (ft^3)	8-Dial Resolution (m^3)
High Side T200	2	1	0.1	0.01
Low Side M25	2	0.1	0.01	0.001
High Side T450	3	1	0.1	0.01
Low Side M25	3	0.1	0.01	0.001
High Side T1000	4	1	0.1	0.01
Low Side M35	4	0.1	0.01	0.001
High Side T2000	6	10	1	0.1
Low Side M35	6	0.1	0.01	0.001

Resolution stated as individual high and low readings.

Making Water Visible®

Making Water Visible, BadgerTouch, GALAXY, ORION and Recordall are registered trademarks of Badger Meter, Inc. Other trademarks appearing in this document are the property of their respective entities. Due to continuous research, product improvements and enhancements, Badger Meter reserves the right to change product or system specifications without notice, except to the extent an outstanding contractual obligation exists. © 2017 Badger Meter, Inc. All rights reserved.

www.badgermeter.com

The Americas | Badger Meter | 4545 West Brown Deer Rd | PO Box 245036 | Milwaukee, WI 53224-9536 | 800-876-3837 | 414-355-0400
México | Badger Meter de las Americas, S.A. de C.V. | Pedro Luis Ogazón N°32 | Esq. Angelina N°24 | Colonia Guadalupe Inn | CP 01050 | México, DF | México | +52-55-5662-0882
Europe, Eastern Europe Branch Office (for Poland, Latvia, Lithuania, Estonia, Ukraine, Belarus) | Badger Meter Europe | ul. Korfantego 6 | 44-193 Knurów | Poland | +48-32-236-8787
Europe, Middle East and Africa | Badger Meter Europa GmbH | Nurtinger Str 76 | 72639 Neuffen | Germany | +49-7025-9208-0
Europe, Middle East Branch Office | Badger Meter Europe | PO Box 341442 | Dubai Silicon Oasis, Head Quarter Building, Wing C, Office #C209 | Dubai / UAE | +971-4-371 2503
Slovakia | Badger Meter Slovakia s.r.o. | Racianska 109/B | 831 02 Bratislava, Slovakia | +421-2-44 63 83 01
Asia Pacific | Badger Meter | 80 Marine Parade Rd | 21-06 Parkway Parade | Singapore 449269 | +65-63464836
China | Badger Meter | 7-1202 | 99 Hangzhong Road | Minhang District | Shanghai | China 201101 | +86-21-5763 5412
Switzerland | Badger Meter Swiss AG | Mittelholzerstrasse 8 | 3006 Bern | Switzerland | +41-31-932 01 11

WARRANTY DOCUMENTATION



Badger Meter | Lead-Free Bronze Disc Meters

PRODUCTS COVERED

This warranty shall apply to all Recordall® Lead-Free Bronze Disc Meters, models 25 through 170, when used to measure potable water, including the registers used with these meters (collectively "Product") sold on or after January 25, 2019. This warranty is extended only to utilities, municipalities, other commercial users and authorized Badger Meter, Inc. distributors, hereafter referred to as "Customer" and does NOT apply to consumers or any person or entity who is not an original customer of Badger Meter or its authorized distributors.

MATERIALS AND WORKMANSHIP

Badger Meter warrants Product to be free from defects in materials and workmanship appearing within the following time frames and those listed in the table below:

Housings
Twenty-five (25) years and six (6) months after shipment from Badger Meter.

Local Registers Supplied with the Meters Listed Herein
Twenty-five (25) years and six (6) months after shipment from Badger Meter.

	AWWA New Meter Accuracy	AWWA Repaired Meter Accuracy (AWWA M6 Manual)	Badger Meter Extended Low Flow Meter Accuracy
Recordall Meter Model, Size	*The meter product will meet or exceed new meter accuracy standards set forth in AWWA Standard C700 for the following periods:*	*The meter product will meet or exceed repaired meter accuracy standards set forth in AWWA Manual M-6, Chapter 5, Table 5.3 for the following periods:*	*Badger Meter further warrants the meter product to meet or exceed the following extended low flow accuracies in excess of AWWA standard:*
Model 25, 5/8 in. and 5/8 x 3/4 in.	Five (5) years from date of shipment or registration of 750,000 gallons, whichever occurs first.	Fifteen (15) years from date of shipment or registration of 2,500,000 gallons, whichever occurs first, with a 25 gpm safe maximum operating capacity and a 15 gpm maximum rate for continuous operation.	Badger Meter warrants Product low flow accuracy of 98.5% at a rate of 1/4 gpm and low flow accuracy of 95.0% at a rate of 1/8 gpm for five (5) years from date of shipment or registration of 675,000 gallons, whichever occurs first.
Model 35, 3/4 in.	Five (5) years from date of shipment or registration of 750,000 gallons, whichever occurs first.	Fifteen (15) years from date of shipment or registration of 2,500,000 gallons, whichever occurs first, with a 35 gpm safe maximum operating capacity and a 25 gpm maximum rate for continuous operation.	Badger Meter warrants Product low flow accuracy of 97% at a rate of 3/8 gpm for five (5) years from date of shipment or registration of 675,000 gallons, whichever occurs first.
Model 55, 1 in.	Five (5) years from date of shipment or registration of 1,000,000 gallons, whichever occurs first.	Fifteen (15) years from date of shipment or registration of 3,000,000 gallons, whichever occurs first, with a 55 gpm safe maximum operating capacity and a 40 gpm maximum rate for continuous operation.	Badger Meter warrants Product low flow accuracy of 95% at a rate of 1/2 gpm for three (3) years from date of shipment or registration of 575,000 gallons, whichever occurs first.
Model 70, 1 in.	Five (5) years from date of shipment or registration of 1,100,000 gallons, whichever occurs first.	Fifteen (15) years from date of shipment or registration of 3,250,000 gallons, whichever occurs first, with a 70 gpm safe maximum operating capacity and a 50 gpm maximum rate for continuous operation.	Badger Meter warrants Product low flow accuracy of 95% at a rate of 3/4 gpm for three (3) years from date of shipment or registration of 1,100,000 gallons, whichever occurs first.
Model 120, 1-1/2 in.	Two (2) years from date of shipment or registration of 1,600,000 gallons, whichever occurs first.	Fifteen (15) years from date of shipment or registration of 5,600,000 gallons, whichever occurs first, with a 120 gpm safe maximum operating capacity and a 80 gpm maximum rate for continuous operation.	Badger Meter warrants Product low flow accuracy of 95% at a rate of 1-1/4 gpm for two (2) years from date of shipment or registration of 1,440,000 gallons, whichever occurs first.
Model 170, 2 in.	Two (2) years from date of shipment or registration of 2,100,000 gallons, whichever occurs first.	Fifteen (15) years from date of shipment or registration of 10,400,000 gallons, whichever occurs first, with a 170 gpm safe maximum operating capacity and a 100 gpm maximum rate for continuous operation.	Badger Meter warrants Product low flow accuracy of 95% at a rate of 1-1/2 gpm for two (2) years from date of shipment or registration of 1,890,000 gallons, whichever occurs first.

PRODUCT RETURNS

Any Product proved to the satisfaction of Badger Meter to have failed the foregoing warranties will, at the option of Badger Meter, be repaired or replaced without charge to the Customer. Any eligible Product repaired or replaced by Badger Meter will retain the original Product's warranty based on the original Product purchase date, at Badger Meter's sole discretion. The Badger Meter obligation hereunder shall be limited to such repair and replacement and shall be conditioned upon Badger Meter receiving written notice of any alleged defect within ten (10) days after its discovery. This exclusive remedy shall not be deemed to have failed its essential purpose so long as Badger Meter is willing and able to replace defective products or issue a credit to purchaser within a reasonable time of proof to Badger Meter that a defect is involved. Product returns must be shipped by the Customer prepaid F.O.B. to the nearest Badger Meter factory or distribution center. The Customer shall be responsible for all direct and indirect costs associated with removing the original Product and reinstalling the repaired or replacement Product.

LIMITS OF LIABILITY

This warranty shall not apply to Product repaired or altered by parties other than Badger Meter. The foregoing warranty applies only to the extent that the Product is installed, serviced and operated strictly in accordance with AWWA Standard C700 and AWWA M6 Manual, as applicable. The warranty shall not apply and shall be void with respect to Product exposed to conditions other than those detailed in the Badger Meter Product technical and/or operational literature, or which have been exposed to adverse installation conditions, damaged by any water conditions and/or water quality, including but not limited to foreign matter in the water such as dirt, sand, minerals, debris, deposits, biofilms, extreme corrosivity, or other impurities, or which have been subject to passage of high-speed air slugs, vandalism, negligence, accident, acts of God, alteration, improper installation, operation or repair, or other circumstances which are beyond the reasonable control of Badger Meter. With respect to Product not manufactured by Badger Meter, the warranty obligations of Badger Meter shall in all respects conform and be limited to the warranty extended to Badger Meter by the supplier.

THE FOREGOING WARRANTIES ARE EXCLUSIVE AND IN LIEU OF ALL OTHER EXPRESS AND IMPLIED WARRANTIES WHATSOEVER, INCLUDING BUT NOT LIMITED TO IMPLIED WARRANTIES OF MERCHANTABILITY AND FITNESS FOR A PARTICULAR PURPOSE (except warranties of Title).

Any description of Product, whether in writing or made orally by Badger Meter or its agents, specifications, samples, models, bulletins, drawings, diagrams, engineering sheets, or similar materials used in connection with any Customer's order are for the sole purpose of identifying Product and shall not be construed as an express warranty. Any suggestions by Badger Meter or its agents regarding use, application or suitability of Product shall not be construed as an express warranty unless confirmed to be such in writing by Badger Meter.

Exclusion of Consequential Damages and Disclaimer of Other Liability

Badger Meter liability with respect to breaches of the foregoing warranty shall be limited as stated therein. Badger Meter liability shall in no event exceed the contract price.
BADGER METER SHALL NOT BE SUBJECT TO AND DISCLAIMS: (1) ANY OTHER OBLIGATIONS OR LIABILITIES ARISING OUT OF BREACH OF CONTRACT OR OF WARRANTY (2) ANY OBLIGATIONS WHATSOEVER ARISING FROM TORT CLAIMS (INCLUDING NEGLIGENCE AND STRICT LIABILITY) OR ARISING UNDER OTHER THEORIES OF LAW WITH RESPECT TO PRODUCTS SOLD OR SERVICES RENDERED BY BADGER METER, OR ANY UNDERTAKINGS, ACTS OR OMISSIONS RELATING THERETO, AND (3) ALL CONSEQUENTIAL, INCIDENTAL AND CONTINGENT DAMAGES WHATSOEVER.

Making Water Visible®

Recordall is a registered trademark of Badger Meter, Inc. Other trademarks appearing in this document are the property of their respective entities. Due to continuous research, product improvements and enhancements, Badger Meter reserves the right to change product or system specifications without notice, except to the extent an outstanding contractual obligation exists. © 2019 Badger Meter, Inc. All rights reserved.

www.badgermeter.com

The Americas | Badger Meter | 4545 West Brown Deer Rd | PO Box 245036 | Milwaukee, WI 53224-9536 | 800-876-3837 | 414-355-0400
México | Badger Meter de las Americas, S.A. de C.V. | Pedro Luis Ogazón N°32 | Esq. Angelina N°24 | Colonia Guadalupe Inn | CP 01050 | México, DF | México | +52-55-5662-0882
Europe, Eastern Europe Branch Office (for Poland, Latvia, Lithuania, Estonia, Ukraine, Belarus) | Badger Meter Europe | ul. Korfantego 6 | 44-193 Knurów | Poland | +48-32-236-8787
Europe, Middle East and Africa | Badger Meter Europa GmbH | Nurtinger Str 76 | 72639 Neuffen | Germany | +49-7025-9208-0
Europe, Middle East Branch Office | Badger Meter Europe | PO Box 341442 | Dubai Silicon Oasis, Head Quarter Building, Wing C, Office #C209 | Dubai / UAE | +971-4-371 2503
Slovakia | Badger Meter Slovakia s.r.o. | Racianska 109/B | 831 02 Bratislava, Slovakia | +421-2-44 63 83 01
Asia Pacific | Badger Meter | 80 Marine Parade Rd | 19-07 Parkway Parade | Singapore 449269 | +65-63464836
Switzerland | Badger Meter Swiss AG | Mittelholzerstrasse 8 | 3006 Bern | Switzerland | +41-31-932 01 11

Legacy Document Number: RD-W-4-AWWA-EN

Badger Meter

HR-E®

High Resolution Encoder

PRODUCTS COVERED

This Badger Meter warranty shall apply to the High Resolution Encoder (HR-E®) ("Product"), sold on or after June 18, 2021. This warranty is not transferable and is extended only to utilities, municipalities, other commercial users and authorized distributors, hereafter referred to as "Customer" and does NOT apply to consumers or any person or entity who is not an original customer of Badger Meter or its authorized distributors.

MATERIALS AND WORKMANSHIP

Badger Meter warrants the Product to be free from defects in materials and workmanship appearing within twenty (20) years and six (6) months after shipment from Badger Meter.

This warranty is prorated as follows: For the first ten (10) years of the warranty the Product is replaced at no charge, and the warranty is prorated at price discounts during the last ten (10) years of the warranty.

Specifically, Badger Meter will repair or replace, at its discretion, a non-performing Product at no cost during the first ten (10) years of the warranty and at prorated price discounts during the last ten (10) years of the warranty. Badger Meter will apply these prorated price discounts to the Product list prices in effect at the time of Product return and according to the following prorated price discount schedule:

- Years 11 through 12—75% discount
- Years 13 through 15—50% discount
- Year 16—40% discount
- Year 17—30% discount
- Year 18—20% discount
- Years 19 through 20—10% discount

Replacement Products are warranted for and under the balance of the original applicable Product warranty.

PRODUCT RETURNS

Any Product proved to the satisfaction of Badger Meter to have failed the foregoing warranties will, at the option of Badger Meter, be repaired or replaced without charge to the Customer. The Badger Meter obligation hereunder shall be limited to such repair and replacement and shall be conditioned upon Badger Meter receiving written notice of any alleged defect within ten (10) days after its discovery. This exclusive remedy shall not be deemed to have failed its essential purpose so long as Badger Meter is willing and able to replace defective products or issue a credit to purchaser within a reasonable time of proof to Badger Meter that a defect is involved. Product returns must be shipped by the Customer prepaid F.O.B. to the nearest Badger Meter factory or distribution center. The Customer shall be responsible for all direct and indirect costs associated with removing the original Product and reinstalling the repaired or replacement Product.

LIMITS OF LIABILITY

This warranty shall not apply to Product repaired or altered by parties other than Badger Meter. The foregoing warranty applies only to the extent that the Product is installed, serviced and operated strictly in accordance with Badger Meter instructions. The warranty shall not apply and shall be void with respect to Product exposed to conditions other than those detailed in the Badger Meter Product technical literature or which have been subject to vandalism, negligence, accident, acts of God, alteration, improper installation, operation or repair, or other circumstances which are beyond the reasonable control of Badger Meter. With respect to Product not manufactured by Badger Meter, the warranty obligations of Badger Meter shall in all respects conform and be limited to the warranty extended to Badger Meter by the supplier.

THE FOREGOING WARRANTIES ARE EXCLUSIVE AND IN LIEU OF ALL OTHER EXPRESS AND IMPLIED WARRANTIES WHATSOEVER, INCLUDING BUT NOT LIMITED TO IMPLIED WARRANTIES OF MERCHANTABILITY AND FITNESS FOR A PARTICULAR PURPOSE **(except warranties of Title).**

Any description of Product, whether in writing or made orally by Badger Meter or its agents, specifications, samples, models, bulletins, drawings, diagrams, engineering sheets or similar materials used in connection with any Customer's order are for the sole purpose of identifying Product and shall not be construed as an express warranty. Any suggestions by Badger Meter or its agents regarding use, application or suitability of Product shall not be construed as an express warranty unless confirmed to be such in writing by Badger Meter.

Exclusion of Consequential Damages and Disclaimer of Other Liability

Badger Meter liability with respect to breaches of the foregoing warranty shall be limited as stated therein. Badger Meter liability shall in no event exceed the contract price. BADGER METER SHALL NOT BE SUBJECT TO AND DISCLAIMS: (1) ANY OTHER OBLIGATIONS OR LIABILITIES ARISING OUT OF BREACH OF CONTRACT OR OF WARRANTY (2) ANY OBLIGATIONS WHATSOEVER ARISING FROM TORT CLAIMS (INCLUDING NEGLIGENCE AND STRICT LIABILITY) OR ARISING UNDER OTHER THEORIES OF LAW WITH RESPECT TO PRODUCTS SOLD OR SERVICES RENDERED BY BADGER METER, OR ANY UNDERTAKINGS, ACTS OR OMISSIONS RELATING THERETO, AND (3) ALL CONSEQUENTIAL, INCIDENTAL AND CONTINGENT DAMAGES WHATSOEVER.

SMART WATER IS *BADGER METER*

Trademarks appearing in this document are the property of their respective entities. Due to continuous research, product improvements and enhancements, Badger Meter reserves the right to change product or system specifications without notice, except to the extent an outstanding contractual obligation exists. © 2021 Badger Meter, Inc. All rights reserved.

www.badgermeter.com

Badger Meter Utility Parts Warranty

WARRANTY COVERAGE

Badger Meter warranty obligations are limited to the terms set forth below.

PRODUCTS COVERED

This Badger Meter warranty shall apply to parts purchased from Badger Meter for approved use in or with Utility products sold by Badger Meter ("Parts") against defects in materials and workmanship under normal use for a period of ninety (90) days from the date of purchase by the original end-user purchaser ("Warranty Period").

PRODUCT RETURNS

Part failures must be proven and verified to the satisfaction of Badger Meter. The Badger Meter obligation hereunder shall be limited to such repair and replacement and shall be conditioned upon Badger Meter receiving written notice of any asserted defect within 10 (ten) days after its discovery. If the defect arises and a valid claim is received within the Warranty Period, at its option, Badger Meter will either (1) exchange the part with a new, used or refurbished part that is at least functionally equivalent to the original part, or (2) refund the purchase price of the part.

Product returns must be shipped by the Customer prepaid F.O.B. to the nearest Badger Meter factory or distribution center. The Customer shall be responsible for all direct and indirect costs associated with removing the original Product and reinstalling the repaired or replacement Product. A replacement Part assumes the remaining warranty of the original Part, or ninety (90) days from the date of replacement, whichever provides longer coverage.

LIMITS OF LIABILITY

This warranty shall not apply to any Part repaired or altered by any party other than Badger Meter. The foregoing warranty applies only to the extent that the Part is installed, serviced and operated strictly in accordance with Badger Meter instructions. The warranty shall not apply and shall be void with respect to a Part exposed to conditions other than those detailed in applicable Product technical literature, or which have been subject to vandalism, negligence, accident, acts of God, improper installation, operation or repair, alteration, or other circumstances which are beyond the reasonable control of Badger Meter.

THE FOREGOING WARRANTIES ARE EXCLUSIVE AND IN LIEU OF ALL OTHER EXPRESS AND IMPLIED WARRANTIES WHATSOEVER, INCLUDING BUT NOT LIMITED TO IMPLIED WARRANTIES OF MERCHANTABILITY AND FITNESS FOR A PARTICULAR PURPOSE (except warranties of title).

Any description of a Part, whether in writing or made orally by Badger Meter or its agents, specifications, samples, models, bulletins, drawings, diagrams, engineering sheets or similar materials used in connection with any Customer's order, are for the sole purpose of identifying the part and shall not be construed as an express warranty. Any suggestions by Badger Meter or its agents regarding use, application or suitability of the Part shall not be construed as an express warranty unless confirmed to be such, in writing, by Badger Meter.

Exclusion of Consequential Damages and Disclaimer of Other Liability.

The liability of Badger Meter with respect to breaches of the foregoing warranty shall be limited as stated herein.
Badger Meter's liability shall in no event exceed the contract price.
BADGER METER SHALL NOT BE SUBJECT TO AND DISCLAIMS:
(1) ANY OTHER OBLIGATIONS OR LIABILITIES ARISING OUT OF BREACH OF CONTRACT OR OF WARRANTY, (2) ANY OBLIGATIONS WHATSOEVER ARISING FROM TORT CLAIMS (INCLUDING NEGLIGENCE AND STRICT LIABILITY) OR ARISING UNDER OTHER THEORIES OF LAW WITH RESPECT TO PRODUCTS SOLD OR SERVICES RENDERED BY BADGER METER, OR ANY UNDERTAKINGS, ACTS OR OMISSIONS RELATING THERETO, AND (3) ALL CONSEQUENTIAL, INCIDENTAL AND CONTINGENT DAMAGES WHATSOEVER.

Making Water Visible®

GALAXY, Making Water Visible, ORION, Recordall and RTR are registered trademarks of Badger Meter, Inc. Other trademarks appearing in this document are the property of their respective entities. Due to continuous research, product improvements and enhancements, Badger Meter reserves the right to change product or system specifications without notice, except to the extent an outstanding contractual obligation exists. © 2016 Badger Meter, Inc. All rights reserved.

www.badgermeter.com

The Americas | Badger Meter | 4545 West Brown Deer Rd | PO Box 245036 | Milwaukee, WI 53224-9536 | 800-876-3837 | 414-355-0400
México | Badger Meter de las Americas, S.A. de C.V. | Pedro Luis Ogazón N°32 | Esq. Angelina N°24 | Colonia Guadalupe Inn | CP 01050 | México, DF | México | +52-55-5662-0882
Europe, Middle East and Africa | Badger Meter Europa GmbH | Nurtinger Str 76 | 72639 Neuffen | Germany | +49-7025-9208-0
Europe, Middle East Branch Office | Badger Meter Europe | PO Box 341442 | Dubai Silicon Oasis, Head Quarter Building, Wing C, Office #C209 | Dubai / UAE | +971-4-371 2503
Czech Republic | Badger Meter Czech Republic s.r.o. | Maříkova 2082/26 | 621 00 Brno, Czech Republic | +420-5-41420411
Slovakia | Badger Meter Slovakia s.r.o. | Racianska 109/B | 831 02 Bratislava, Slovakia | +421-2-44 63 83 01
Asia Pacific | Badger Meter | 80 Marine Parade Rd | 21-06 Parkway Parade | Singapore 449269 | +65-63464836
China | Badger Meter | 7-1202 | 99 Hangzhong Road | Minhang District | Shanghai | China 201101 | +86-21-5763 5412

Legacy Document Number: BMI-W-01

***SMART WATER IS** BADGER METER*

Trademarks appearing in this document are the property of their respective entities. Due to continuous research, product improvements and enhancements, Badger Meter reserves the right to change product or system specifications without notice, except to the extent an outstanding contractual obligation exists.
© 2026 Badger Meter, Inc. All rights reserved.

www.badgermeter.com

The Americas | Badger Meter | 4545 West Brown Deer Rd | PO Box 245036 | Milwaukee, WI 53224-9536 | 800-876-3837 | 414-355-0400
México | Badger Meter de las Americas, S.A. de C.V. | Pedro Luis Ogazón N°32 | Esq. Angelina N°24 | Colonia Guadalupe Inn | CP 01050 | México, DF | México | +52-55-5662-0882
Europe, Eastern Europe Branch Office (for Poland, Latvia, Lithuania, Estonia, Ukraine, Belarus) | Badger Meter Europe | ul. Korfantego 6 | 44-193 Knurów | Poland | +48-32-236-8787
Europe, Middle East and Africa | Badger Meter Europa GmbH | Nurtinger Str 76 | 72639 Neuffen | Germany | +49-7025-9208-0
Europe, Middle East Branch Office | Badger Meter Europe | PO Box 341442 | Dubai Silicon Oasis, Head Quarter Building, Wing C, Office #C209 | Dubai / UAE | +971-4-371 2503
Slovakia | Badger Meter Slovakia s.r.o. | Racianska 109/B | 831 02 Bratislava, Slovakia | +421-2-44 63 83 01
Asia Pacific | Badger Meter | 80 Marine Parade Rd | 19-07 Parkway Parade | Singapore 449269 | +65-63464836
Switzerland | Badger Meter Swiss AG | Mittelholzerstrasse 8 | 3006 Bern | Switzerland | +41-31-932 01 11

CGS
UTILITY PRODUCTS

May 13, 2026

Attn: Sierra Lowry
Smyrna Town Hall Purchasing Dept.
Sealed Bid on Annual Gas, Water & Sewer Materials
May 19 @ 2:00 pm
315 South Lowry Street
Smyrna TN 37167

We are pleased to provide the attached quotation on gas materials per your request. Items left blank are No Bid. Thank you.

Sincerely,

Mark Loveday

Chris Georges Sales
P.O. Box 22310
Knoxville, TN 37933
Phone: 865.988.9080
800.251.9482
Fax: 865.986.9062
Web: www.cgs-inc.com

LEGAL NOTICE

INVITATION TO SUBMIT QUOTATIONS

The Town of Smyrna will accept quotations on the annual Gas, Water and Sewer materials for the Utilities Department. Bidders shall submit sealed quotations in the format specified in the Invitation to Submit Quotations no later than **2:00 p.m. May 19, 2026** at which time the bids will be publicly opened and read aloud. No bid may be withdrawn after the scheduled closing time for a period of 90 days. Bidding documents may be obtained at Smyrna Town Hall during regular business hours or www.townofsmyrna.org. Quotations should be mailed or hand delivered to:

Purchasing Department
Smyrna Town Hall
Sealed Bid on Annual Gas, Water & Sewer Materials
May 19 @ 2:00 p.m.
315 South Lowry Street
Smyrna, TN 37167

The Town of Smyrna will not discriminate in the purchase of all goods and services on the basis of race, color, religion, sex, national origin, age, disability or any other lawfully protected classification.

Verbal quotations, faxed quotations or quotations received after the closing date will not be accepted. The Town of Smyrna reserves the right to reject any and all bids, to waive technicalities or informalities and to accept any bid deemed to be in the best interest of the Town.

BY: Sierra Lowry
Finance Director

TO BE RUN: May 5, 2026

CGS Inc.

COMPANY NAME



AGREEMENT

This Agreement is made and entered into as of this _____ day of _____, 20___, by and between CGS Inc., a Tennessee corporation (the "Bidder") and the Town of Smyrna, Tennessee, a Tennessee municipal corporation (the "Town") for the purpose of _____.

WHEREAS, the Bidder has submitted a quotation for the provision of certain products and/or services to the Town, all in accordance with the terms of the Invitation to Submit Quotations attached hereto and incorporated herein by reference as if set forth at length verbatim as Exhibit A (the "ISQ"), and which Proposal from the Bidder is attached hereto and incorporated herein by reference as if set forth at length verbatim as Exhibit B (the "Quotation"); the ISQ and the Quotation, together with any and all ancillary documents thereto, shall be collectively referred to herein as the "Bid Documents"; and

WHEREAS, the Town now desires to accept the Bidder's quotation, in accordance with the terms set forth in such Bid Documents.

NOW, THEREFORE, in consideration of the mutual covenants contained herein, and for other good and valuable consideration, the receipt and sufficiency of which is hereby acknowledged, the undersigned do hereby agree as follows:

1. Acceptance of Bid Documents. The terms of the Bid Documents, as incorporated herein by reference, are hereby accepted by the parties hereto. The Bidder hereby agrees to provide the goods and/or services contemplated by such Bid Documents in accordance with the terms set forth therein. The Town hereby accepts the Bidder's quotation to provide the goods and/or services contemplated by such Bid Documents in accordance with the terms set forth therein.

2. Entire Agreement. This Agreement, including the exhibits and any other documents referred to herein or therein, which form a part hereof, contains the entire understanding of the parties with respect to its subject matter. There are no restrictions, agreements, promises, warranties, covenants or undertakings other than those expressly set forth herein or therein. This Agreement supersedes all prior written or oral agreements and understandings between the parties with respect to its subject matter and may not be altered, modified or amended, in whole or in part, except by the express written authorization and consent of the parties hereto.

IN WITNESS WHEREOF, the undersigned have executed this Agreement as of the date set forth above.

TOWN OF SMYRNA, TENNESSEE

By: _____
Name: Mary Esther Reed
Title: Mayor

ATTEST:

_____
Amber Hobbs, Town Clerk

BIDDER:

By: Mark Lowry
Title: General Manager

ATTEST:

Beth Ford

SECTION III - SPECIFICATIONS COMPLIANCE

Unless otherwise noted, all quotations for the annual gas, water and sewer materials shall be in complete accordance with the specifications detailed herein.

Bidders shall note in the space provided below any exceptions or deviations in any way from the specifications of any section of this ISQ. Bidders should provide complete detail of exceptions or deviations.

Proposal Exceptions

Section	Brief Description

By signature below, vendor acknowledges any quotation to be in full compliance with all aspects of each section of the ISQ not noted above. The undersigned hereby declares that no person or party other than the undersigned has any interest whatever in this proposal, that it is without any connection or collusion with any person or persons making or having made any proposal for the same work and without any previous understanding with such person or persons as to relative prices, obviating competition, and that it is made in good faith.

CGS Inc.
COMPANY

800-251-9482
TELEPHONE NUMBER

Mark Loveday
REPRESENTATIVE NAME

General Manager
REPRESENTATIVE TITLE

Mark Loveday
SIGNATURE

mloveday@cgs-inc.com
E-MAIL ADDRESS

GAS MATERIALS BID LIST 2025-2026

GAS	ITEM #	DESCRIPTION	SIZE	APPROVED PART #	ALTERNATE PART #	UNIT	EST QTY FY 26/27	BIDDER	UNIT PRICE	ESTIMATED DELIVERY TIME
		METER RISERS							NO BID	
G	89	RISER, ANODELESS, 36V X 24H, ELSTER PERFECTION	3/4" X 3/4"	79207		EA	300			
G	90	RISER, ANODELESS, ELSTER PERFECTION	1" X 1"	75766		EA	30			
G	92	RISER, ANODELESS, ELSTER PERFECTION,	2" X 2"	ASR2-2F-PB		EA	30			

GAS	ITEM #	DESCRIPTION	SIZE	APPROVED PART #	ALTERNATE PART #	UNIT	EST QTY FY 26/27	BIDDER	UNIT PRICE	ESTIMATED DELIVERY TIME
		CUTTOFS								
G	96	STOPCOCK; JOMAR 241-004D	3/4"	241-004D		EA	300	CGS Inc.	42.05	2 weeks
G	97	STOPCOCK, HIGH PRESSURE, MUELLER	3/4"	3/4" H-11185		EA	10			
G	98	STOPCOCK;JOMAR 240-005B STRAIGHT	1"	240-005B		EA	30	CGS Inc.	$38.25	2 weeks
G	99	STOPCOCK; JOMAR 241-005D	1"	241-005D		EA	40	CGS Inc.	$56.16	2 weeks
G	100	STOPCOCK; 175 MAOP MUELLER	1 1/4"	1 1/4"H11175		EA	10			
G	101	STOPCOCK; 175 MAOP MCDONALD	1 1/2"	560 B 1 1/2"		EA	10			
G	102	STOPCOCK; 175 MAOP MUELLER	2"	2" H11175		EA	30			

GAS	ITEM #	DESCRIPTION	SIZE	APPROVED PART #	ALTERNATE PART #	UNIT	EST QTY FY 26/27	BIDDER	UNIT PRICE	ESTIMATED DELIVERY TIME
		POLYETHYLENE PIPE							NO BID	
G	107	PIPE; HIGH DENSITY 8300 4710 BLK/YELLOW STRIPE-SDR-11 (500 FT ROLLS)	3/4"	1114569-83P 00.75"		FT	20000			
G	108	PIPE; HIGH DENSITY 8300 4710 BLK/YELLOW STRIPE-SDR-11(500 FT ROLLS)	1"	1114606-83P 01.00"		FT	3000			
G	109	PIPE; HIGH DENSITY 8300 4710 BLK/YELLOW STRIPE -SDR-11(500 FT ROLLS)	1 1/4"	1056882-83P 01.25"		FT	350			
G	110	PIPE; HIGH DENSITY 8300 4710 BLK/YELLOW STRIPE-SDR-11 (500 FT ROLLS)	2"	1056925-83P 0.200		FT	15000			
G	111	PIPE; HIGH DENISTY 8300 4710 BLK/YELLOW STRIPE -SDR-11(40 FT PER SECTION)	3"	1056967-83P 03.00"		FT	200			
G	112	PIPE; HIGH DENSITY 8300 4710 BLK/YELLOW STRIPE-SDR-11(40 FT PER SECTION)	4"	1061088-83P 04.00"		FT	5000			
G	113	PIPE; HIGH DENSITY 8300 4710 BLK/YELLOW STRIPE -SDR-11(40 FT PER SECTION)	6"	1057061-83P 06.00"		FT	2000			
		DURA LINE NOT ACCEPTED								

GAS	ITEM #	DESCRIPTION	SIZE	APPROVED PART #	ALTERNATE PART #	UNIT	EST QTY FY 26/27	BIDDER	UNIT PRICE	ESTIMATED DELIVERY TIME
		POLYETHYLENE FITTINGS							NO BID	
G	118	CAP; BUTT FUSE HIGH DENISTY 8100 4710	3/4"	BBF40-07		EA	100			
G	119	CAP; BUTT FUSE HIGH DENSITY 8100 4710	1"	BBF40-1		EA	15			
G	121	CAP; BUTT FUSE HIGH DENSITY8100 4710	2"	BBF40-2		EA	40			
G	122	CAP; BUTT FUSE HIGH DENSITY 8100 4710	3"	BBF40-3		EA	10			
G	123	CAP; BUTT FUSE HIGH DENSITY 8100 4710	4"	BBF40-4		EA	25			
G	124	CAP; BUTT FUSE HIGH DENSITY 8100 4710	6"	BBF40-6		EA	10			
G	125	REDUCER; BUTT FUSE HIGH DENSITY 8100 4710	1" X 1/2"	1006458		EA	5			
G	126	REDUCER; BUTT FUSE HIGH DENSITY 8100 4710	1" X 3/4"	1036888		EA	10			
G	127	REDUCER; BUTT FUSE HIGH DENSITY 8100 4710	1 1/4" X 1"	1007964		EA	10			
G	128	REDUCER; BUTT FUSE HIGH DENISTY 8100 4710	2" X 1"	1063171		EA	10			
G	129	REDUCER; BUTT FUSE HIGH DENSITY 8100 4710	2" X 1 1/4"	1007977		EA	10			
G	130	REDUCER; BUTT FUSE HIGH DENSITY 8100 4710	3" X 2"	1007985		EA	10			
G	131	REDUCER; BUTT FUSE HIGH DENSITY 8100 4710	6" X 4"	1006469		EA	10			
G	132	REDUCER; BUTT FUSE HIGH DENSITY 8100 4710	4" x 3"	1007992		EA	6			
G	133	REDUCER; BUTT FUSE HIGH DENSITY 8100 4710	4" X 2"	1006466		EA	25			
G	134	TEE; HIGH DENSITY 8100 4710	3/4"	1007902		EA	30			
G	135	TEE; HIGH DENSITY 8100 4710	1"	1007910		EA	20			
G	136	TEE; HIGH DENSITY 8100 4710	1 1/4"	1007917		EA	4			
G	137	TEE; HIGH DENSITY 8100 4710	2"	1006426		EA	20			

G	138	TEE; HIGH DENSITY 8100 4710	3"	1007933		EA	4			
G	139	TEE; HIGH DENSITY8100 4710	4"	1006434		EA	20			
G	140	TEE; HIGH DENSITY 8100 4710	6"	1006442		EA	6			
G	141	ELBOW; 90 D HIGH DENSITY 8100 4710	2"	1006422		EA	10			
G	142	ELBOW; 90 D HIGH DENSITY 8100 4710	3"	1007932		EA	10			
G	143	ELBOW; 90 D HIGH DENSITY 8100 4710	4"	1006432		EA	10			
G	144	ELBOW; 90 D HIGH DENSITY 8100 4710	6"	1006440		EA	10			
G	145	ELBOW; 45 D HIGH DENSITY 8100 4710	4"	1006430		EA	10			
GAS	ITEM #	DESCRIPTION	SIZE	APPROVED PART #	ALTERNATE PART #	UNIT	EST QTY FY 26/27	BIDDER	UNIT PRICE	ESTIMATED DELIVERY TIME
		BOLT ON STEEL TAPPING SADDLE							NO BID	
G	149	TAPPING SADDLE; STEEL, CONTINENTAL	1 1/4"	1315-15-1013-00		EA	4			
G	150	TAPPING SADDLE; STEEL, CONTINENTAL	2" X 3/4"	1315-17-1013-00		EA	4			
G	151	TAPPING SADDLE; STEEL, CONTINENTAL	2" X 1"	1315-17-1014-00		EA	4			
G	152	TAPPING SADDLE; STEEL, CONTINENTAL	2 1/2" X 1"			EA	4			
G	153	TAPPING SADDLE; STEEL, CONTINENTAL	3" X 1""	1315-19-1014-00		EA	4			
G	154	TAPPING SADDLE; STEEL, CONTINENTAL	4" X 1"	1315-21-1014-00		EA	4			
G	155	TAPPING SADDLE; STEEL, CONTINENTAL	6" X 1"	1315-24-1014-00		EA	4			
GAS	ITEM #	DESCRIPTION	SIZE	APPROVED PART #	ALTERNATE PART #	UNIT	EST QTY FY 26/27	BIDDER	UNIT PRICE	ESTIMATED DELIVERY TIME
		LYCOFIT FITTINGS								
G	160	REDUCER; LYCOFIT	3/4" X 1/2"	LCY060Y010B-RR		EA	10	CGS INC.	$42.90	3 WEEKS
G	161	TEE; LYCOFIT	3/4"	LCO60Y-3TR		EA	25	CGS INC.	$74.66	3 WEEKS
G	162	TEE; LYCOFIT	1"	LC070Y-3TR		EA	20	CGS INC.	$80.49	3 WEEKS
G	163	TEE; LYCOFIT	2"	LC200Y-3TR		EA	20	CGS INC.	$81.10	3 WEEKS
G	164	LYCO CAP	3/4"	LC060Y ECR		EA	50	CGS INC.	$30.59	3 WEEKS
G	165	LYCO CAP	1"	LC070Y-ECR		EA	20	CGS INC.	$32.75	3 WEEKS
G	166	LYCO CAP	2"	LC200Y-ECR		EA	10	CGS INC.	$88.22	3 WEEKS
G	167	COUPLING; LYCOFIT	3/4"	LC 060 Y-DER		EA	100	CGS INC.	$27.39	3 WEEKS
G	168	COUPLING; LYCOFIT	1/2"	LC 010 B-DER		EA	10	CGS INC.	$14.15	3 WEEKS
G	169	COUPLING; LYCOFIT	1"	LC 070Y-DER		EA	50	CGS INC.	$30.82	3 WEEKS
G	170	COUPLING; LYCOFIT	1 1/4"	LCO80X-DESR		EA	10	CGS INC.	$108.10	3 WEEKS
G	171	COUPLING; LYCOFIT	2"	LC200Y-DESR		EA	40	CGS INC.	$115.36	3 WEEKS
G	172	COUPLING; LYCOFIT REPAIR	2"	LC 200Y-DER		EA	15	CGS INC.	$115.36	3 WEEKS
GAS	ITEM #	DESCRIPTION	SIZE	APPROVED PART #	ALTERNATE PART #	UNIT	EST QTY FY 26/27	BIDDER	UNIT PRICE	ESTIMATED DELIVERY TIME
		POLYVALVES							NO BID	
G	177	POLYVALVE; KEROTEST FULL PORT, 4710	1"	99051111	PERFECTION 45011	EA	10			
G	178	POLYVALVE; KEROTEST FULL PORT, 4710	1 1/4"	99051211	PERFECTION 45172	EA	5			
G	179	POLYVALVE; KEROTEST FULL PORT, 4710	2"	99052011	PERFECTION 46001	EA	25			
G	180	POLYVALVE; KEROTEST FULL PORT, 4710	3'	99053011	PERFECTION 47016	EA	5			
G	181	POLYVALVE; KEROTEST FULL PORT, 4710	4"	99054011	PERFECTION 47010	EA	25			
G	182	POLYVALVE; KEROTEST FULL PORT, 4710	6"	99056011	PERFECTION 48000	EA	5			
GAS	ITEM #	DESCRIPTION	SIZE	APPROVED PART #	ALTERNATE PART #	UNIT	EST QTY FY 26/27	BIDDER	UNIT PRICE	ESTIMATED DELIVERY TIME
		TRANSITION FITTINGS							NO BID	
G	187	TRANSITION FITTING; STEEL - ELSTER PERFECTION	3/4" X 1/2"	700303		EA	5			
G	188	TRANSITION FITTING; STEEL - ELSTER PERFECTION	3/4" X 3/4"	700901		EA	5			
G	189	TRANSITION FITTING; STEEL - ELSTER PERFECTION	1" X 1"	701301		EA	5			
G	190	TRANSITION FITTING; STEEL - ELSTER PERFECTION	2" X 2"	702730		EA	5			
G	191	TRANSITION FITTING; STEEL - ELSTER PERFECTION	3" X 3"	702903		EA	5			
G	192	TRANSITION FITTING; STEEL - ELSTER PERFECTION	4" X 4"	703129		EA	5			
G	193	TRANSITION FITTING; STEEL - ELSTER PERFECTION	6" X 6"	704116		EA	5			

GAS MATERIALS BID LIST 2025-2026

GAS	ITEM #	DESCRIPTION	SIZE	APPROVED PART #	ALTERNATE PART #	UNIT	EST QTY FY 26/27	BIDDER	UNIT PRICE	ESTIMATED DELIVERY TIME
		DRESSER COUPLINGS							NO BID	
G	207	COUPLING; ARMORED COMPRESSION, DRESSER	3/4" X 6"	0900-0001-082		EA	5			
G	208	COUPLING; ARMORED COMPRESSION, DRESSER	1" X 6"	0090-0002-082		EA	5			
G	209	COUPLING; ARMORED COMPRESSION, DRESSER	1 1/4" X 6"	0090-0003-082		EA	5			
G	210	COUPLING; ARMORED COMPRESSION, DRESSER	1 1/2" X 6"	0090-0004-082		EA	5			
G	211	COUPLING; ARMORED COMPRESSION, DRESSER	2" X 6"	0090-0005-082		EA	5			
G	212	COUPLING; ARMORED COMPRESSION, DRESSER	3/4" X 12"	0090-0090-082		EA	5			
G	213	COUPLING; ARMORED COMPRESSION, DRESSER	1" X 12"	0090-0091-082		EA	5			
G	214	COUPLING; ARMORED COMPRESSION, DRESSER	1 1/4" X 12"	0090-0092-082		EA	5			
G	215	COUPLING; ARMORED COMPRESSION, DRESSER	1 1/2" X 12"	0090-0093-082		EA	5			
G	216	COUPLING; ARMORED COMPRESSION, DRESSER	2" X 12"	0090-0094-082		EA	5			
G	217	COUPLING; ARMORED COMPRESSION TEE, DRESSER	3/4"	0090-0710-082		EA	5			
G	218	COUPLING; ARMORED COMPRESSION TEE, DRESSER	1"	0090-0711-082		EA	5			
GAS	ITEM #	DESCRIPTION	SIZE	APPROVED PART #	ALTERNATE PART #	UNIT	EST QTY FY 26/27	BIDDER	UNIT PRICE	ESTIMATED DELIVERY TIME
		WELD TAP TEES							NO BID	
G	223	MUELLER WELD ON TAP	3/4"	H - 17500 3/4"		EA	5			
G	224	MUELLER WELD ON TAP	1"	H - 17500 1"		EA	5			
G	225	MUELLER WELD ON TAP	2"	H - 17500 2"		EA	5			
GAS	ITEM #	DESCRIPTION	SIZE	APPROVED PART #	ALTERNATE PART #	UNIT	EST QTY FY 26/27	BIDDER	UNIT PRICE	ESTIMATED DELIVERY TIME
		VALVE BOXES							NO BID	
G	230	TALL VALVE BOX WITH LIDS; SIGMA		562-S-G		EA	50			
G	231	SHORT VALVE BOX WITH LIDS; SIGMA		461-S-G		EA	10			
G	232	VALVE BOX EXTENSION; SIGMA	1"	VBR-1		EA	25			
G	233	VALVE BOX EXTENSION; SIGMA	1.5"	VBR 1.5		EA	25			
G	234	VALVE BOX EXTENSION; SIGMA	2"	VBR - 2		EA	30			
G	235	VALVE BOX EXTENSION; SIGMA	3"	VBR -3		EA	25			
G	236	VALVE BOX EXTENSION; SIGMA	4"	VBR - 4		EA	25			
G	237	VALVE BOX EXTENSION; SIGMA	6"	VBR - 6		EA	25			
		HIGHLIGHTED PORTION IS ALSO ON THE WATER BID (W-500-505)		*PLEASE BID ON WATER (W-500-505)* AS WELL	*PLEASE BID ON WATER (W-500-505)* AS WELL					
GAS	ITEM #	DESCRIPTION	SIZE	APPROVED PART #	ALTERNATE PART #	UNIT	EST QTY FY 26/27	BIDDER	UNIT PRICE	ESTIMATED DELIVERY TIME
		METAL INSERTS							NO BID	
G	243	METAL STIFFNER INSERTS, ELSTER PERFECTION	3/4" X 6"	74201		EA	5			
G	244	METAL STIFFNER INSERTS, ELSTER PERFECTION	1" X 6"	74203		EA	5			
G	245	METAL STIFFNER INSERTS, ELSTER PERFECTION	1 1/4" x 6"	74204		EA	5			
G	246	METAL STIFFNER INSERTS, ELSTER PERFECTION	1 1/2" x 6"	74206		EA	5			
G	247	METAL STIFFNER INSERTS, ELSTER PERFECTION	2" X 6"	74205		EA	5			
G	248	METAL STIFFNER INSERTS, ELSTER PERFECTION	3" X 6"	74210		EA	5			
GAS	ITEM #	DESCRIPTION	SIZE	APPROVED PART #	ALTERNATE PART #	UNIT	EST QTY FY 26/27	BIDDER	UNIT PRICE	ESTIMATED DELIVERY TIME
		MAGNESIUM ANODES							NO BID	
G	253	ANODES, MAG	5#	ANODE - 5		EA	5			
G	254	ANODES, MAG	17#	ANODE - 7		EA	5			

GAS MATERIALS BID LIST 2025-2026

GAS	ITEM #	DESCRIPTION	SIZE	APPROVED PART #	ALTERNATE PART #	UNIT	EST QTY FY 26/27	BIDDER	UNIT PRICE	ESTIMATED DELIVERY TIME
		TRACER WIRE							NO BID	
G	259	TRACER WIRE - 12 GAUGE COPPER (500' ROLLS)		KRIS-TECH WIRE CW0177500		FT	30000			
GAS	ITEM #	DESCRIPTION	SIZE	APPROVED PART #	ALTERNATE PART #	UNIT	EST QTY FY 26/27	BIDDER	UNIT PRICE	ESTIMATED DELIVERY TIME
		ELECTROFUSION							NO BID	
G	262	COUPLING; CENTRAL 4710 HDPE	1" X 1"	5760006		EA	30			
G	263	COUPLING; CENTRAL 4710 HDPE	2" X 2"	5760012		EA	20			
G	264	COUPLING; CENTRAL 4710 HDPE	3"	5757007		EA	10			
G	265	COUPLING; CENTRAL 4710 HDPE	4"			EA	20			
G	266	COUPLING; CENTRAL 4710 HDPE	6"			EA	10			
G	267	COUPLING; CENTRAL-REDUCING 4710 HDPE	1" X 3/4"			EA	50			
G	268	COUPLING; CENTRAL-REDUCING 4710 HDPE	1" X 1/2"			EA	10			
G	269	COUPLING; CENTRAL-TAP TEE 4710 HDPE	2" x 3/4"				200			
G	270	COUPLING; CENTRAL-TAP TEE 4710 HDPE	2" X 1"			EA	100			
G	271	COUPLING; CENTRAL- TAP TEE 4710 HDPE	3" x 1"			EA	20			
G	272	COUPLING; CENTRAL-TAP TEE 4710 HDPE	4" x 3/4"				100			
G	273	COUPLING; CENTRAL-TAP TEE 4710 HDPE	4" X 1"			EA	100			
G	274	COUPLING; CENTRAL-TAP TEE 4710 HDPE	6" X 1"			EA	20			
G	275	COUPLING; CENTRAL-TAP TEE-HV 4710 HDPE	2" X 2"			EA	20			
G	277	COUPLING; CENTRAL-TAP TEE-HV 4710 HDPE	3" X 2"			EA	10			
G	278	COUPLING; CENTRAL-TAP TEE-HV 4710 HDPE	4" X 2"			EA	10			
G	279	COUPLING; CENTRAL-TAP TEE-HV 4710 HDPE	6" X 2"			EA	10			
GAS	ITEM #	DESCRIPTION	SIZE	APPROVED PART #	ALTERNATE PART #	UNIT	EST QTY FY 26/27	BIDDER	UNIT PRICE	ESTIMATED DELIVERY TIME
		EXCESS FLOW VALVES							NO BID	
G	299	EXCESS FLOW VALVE SDR 11 IPS 4710 DRISCO 8300 SERIES 700	3/4"	MAC IPS SDR11 8300 BFS/700 EF	50098GB	EA	250			
G	300	EXCESS FLOW VALVE SDR 11 IPS PLEXO 4710 SERIES 1800	1"	UMAC SERIES 1800 GREEN LABEL		EA	15			
G	301	EXCESS FLOW VALVE SDR 11 IPS PLEXO 4710 SERIES 2600	1"	UMAC SERIES 2600 PINK LABEL		EA	10			

Town of Smyrna
Town Council Meeting
Agenda Summary

Agenda Item Number 5.c.
Department: Utilities
Date: July 14, 2026

Subject:
Approval of the terms of, and authorization for the Mayor to execute, Final Change Order #1 for the Golf Course Water Line Project.

Fiscal Impact:
This results in a savings of $9,858.86, bringing the final total to $196,843.14

Contract Type:
Contract Change Order /Amendment

Contract Term (if applicable):
N/A

Background:
This project was two-fold. First, the front nine of the golf course was served from the air base and the line ran in front of the end of a runway. The airport authority was doing work and needed the line moved, so we tied to Sam Ridley to serve the front nine and set a meter (part two) to monitor usage and abandoned the line for the airport.

Summary:
Tied the golf course front nine onto Sam Ridley main, set the meter, and disconnected the line crossing the airport. The work was less than anticipated.

Recommended Council Action:
Staff recommends approval of Final Change Order #1 for Golf Course Water Line Project.

Attachments:
1. Smyrna Golf Course Water Line Change Order No. 1 - Final Adjusting - EXECUTED

J26025

CHANGE ORDER NO. 1

PROJECT: **TOWN OF SMYRNA, TENNESSEE**
GOLF COURSE WATER LINE

CONTRACTOR: **JARRETT BUILDERS, INC.**
1106 LEBANON PIKE
NASHVILLE, TENNESSEE 37918

DATE: **MAY 18, 2026**

DESCRIPTION: Change Order No. 1 is the final adjusting costs per the attached summary. The items and cost are listed as follows:

Item #	Description	Unit	Quantity	Unit Cost	Cost
1)	¾" SERVICE LINE RECONNECTION AT BATHROOM BUILDING	LS	1	$ 14,741.14	$ 14,741.14
2)	FINAL ADJUSTING SUMMARY	LS	1	$ (24,600.00)	$ (24,600.00)
			Subtotal		**$(9,858.86)**

Original Contract Amount: **$ 206,702.00**
Contract Amount Decreased by Change Order No. 1: **$ (9,858.86)**
Total Revised Contract Amount with Change Order No. 1: **$ 196,843.14**

Additional Contract Time: 3 Day
Original Contract Time: 45 Days
Revised Contract Time: 48 Days
Revised Contract Completion Date: April 18th, 2026

This change order shall become effective upon execution by the Owner, Engineer and Contractor. Signature by the Contractor indicates his agreement herewith, including any adjustment in the Contract Sum and Contract Time.

TOWN OF SMYRNA, TN
ADMINISTRATION
By:_____

Date:_____

TOWN OF SMYRNA, TN
UTILITIES DEPARTMENT
By:_____

Date:_____

THOMAS & HUTTON
ENGINEER
By: Ryan Chambless

Date: 5/18/2026

JARRETT BUILDERS INC.
CONTRACTOR
By: Kindi L Jarrett

Date: 5-19-26

Change Order Authorization Form: 101A

Jarrett Companies Information

Division: Jarrett Site Work [X] Jarrett Paving [ ] Jarrett Fire [ ] Jarrett Concrete [ ]

Project Manager: Matt Payne

Date: 5/5/2026

Customer Information

Company Name: Town of Smyrna

Address: 315 South Lowry Street

Project Manager / Owner Representative: Ryan Chamblee

Project Information

Project Name: Town of Smyrna - Golf Course Water Line

Job No.: J26025

Project Address: 101 Sam Ridley Pkwy E

Change Order Number: 1

Change Order Type:

T&M [ ] Unit Rate [ ] Daily Rate [ ] Lump Sum [X]

Description

Provide additional labor, equipment, and material for the attached cost breakout

Exclusions

Per contract

Cost

$14,741.14

Additional Days Requested

3 days

Acceptance & Authorization :

Signature below denotes acceptance of work and associated cost described above as well as confirmation and authorization to proceed.

Signature: _____	Signature: _____
Name (print):	Name (print):
Company:	Company:
Title:	Title:
Date:	Date:

1106 Lebanon Pike, Nashville, Tennessee 37210 / Office: (615) 515-1270 / Fax: (615) 515-1271

CHANGE ORDER BREAKOUT

ITEM DESCRIPTION	MATERIAL				LABOR				EQUIPMENT			
	QUANTITY	UNIT	COST	TOTAL	QUANTITY	UNIT	COST	TOTAL	QUANTITY	UNIT	COST	TOTAL
4" sleeve for 2" PEX	35	LF	$ 6.67	$ 233.60				$ -				$ -
Date: 5/5/2026	2	EA	$ 41.30	$ 82.60				$ -				$ -
2" brass 90	1	EA	$ 30.79	$ 30.79				$ -				$ -
2" model77 blow off hydrant	1	EA	$ 1,327.34	$ 1,327.34				$ -				$ -
6" X 3/4" tap	1	EA	$ 261.63	$ 261.63				$ -				$ -
3/4" PEX	16	LF	$ 5.81	$ 93.00				$ -				$ -
				$ -				$ -				$ -
				$ -				$ -				$ -
				$ -				$ -				$ -
Superintendent				$ -	3.25	HRS	$ 50.00	$ 162.50				$ -
Foreman				$ -	32.5	HRS	$ 45.00	$ 1,462.50				$ -
Operator				$ -	32.5	HRS	$ 35.00	$ 1,137.50				$ -
Pipe Layer				$ -	65	HRS	$ 30.00	$ 1,950.00				$ -
Laborer				$ -	32.5	HRS	$ 25.00	$ 812.50				$ -
Survey Crew				$ -		HRS	$ 135.00	$ -				$ -
Superintendent Truck				$ -				$ -	3.25	HRS	$ 15.00	$ 48.75
Foreman Truck				$ -				$ -	32.5	HRS	$ 15.00	$ 487.50
Excavator				$ -				$ -	32.5	HRS	$ 38.00	$ 1,235.00
Dozer				$ -				$ -	32.5	HRS	$ 32.00	$ 1,040.00
Dump Truck				$ -				$ -		HRS	$ 130.00	$ -
Dump Fees				$ -				$ -		EA	$ 150.00	$ -
Second Tier Subcontractor		Material Subtotal		$ 2,028.96		Labor Subtotal		$ 5,525.00				
		Material Taxes %		9.25%		Labor Burden		40%				
		Material Taxes		$ 187.68		Labor Burden		$ 2,210.00				
Sub Total	$ -	Material Total		$ 2,216.64		Labor Total		$ 7,735.00		Equipment Total		$ 2,811.25

Subcontractor Total	$ -
Material Total	$ 2,216.64
Equipment Total	$ 2,811.25
Labor Total	$ 7,735.00
Subtotal	$ 12,762.89

10.0%	Overhead	$ 1,276.29
5.0%	Profit	$ 701.96
OH & Profit Total		$ 1,978.25
Total Change Order Cost		**$ 14,741.14**

TOWN OF SMYRNA, TENNESSEE
GOLF COURSE WATER LINE
FINAL ADJUSTING SUMMARY

ITEM	DESCRIPTION	UNIT	ESTIMATED QUANTITY	QUANTITY INSTALLED	UNIT PRICE	NET CHANGE
1	8 IN C-900 DR 14 WATER LINE	LF	353	339	$154.00	-$2,156.00
2	6 IN C-900 DR 14 WATER LINE	LF	200	49	$114.50	-$17,289.50
3	4 IN C-900 DR 14 WATER LINE	LF	70	20.5	$117.00	-$5,791.50
4	2 IN PEXa SERVICE PIPE	LF	5	45	$292.00	$11,680.00
5	2 IN WATER SERVICE METER ASSEMBLY	EACH	1	1	$6,058.00	$0.00
6	CONNECT TO EXISTING 4 IN WATER LINE	EACH	1	1	$4,793.00	$0.00
7	D.I. FITTINGS	EACH	700	719	$7.00	$133.00
8	5-1/4 IN FIRE HYDRANT ASSEMBLY	EACH	3	2	$9,362.50	-$9,362.50
9	8 IN GATE VALVE	EACH	1	1	$2,708.00	$0.00
10	6 IN GATE VALVE	EACH	1	2	$1,902.00	$1,902.00
11	4 IN GATE VALVE	LBS	2	2	$1,612.50	$0.00
12	2 IN GATE VALVE	LF	1	0	$1,444.00	-$1,444.00
13	24 IN TAPPING SLEEVE AND 8 IN GATE VALVE	EACH	1	1	$36,442.00	$0.00
14	CUT AND CAP EXISTING WATER LINES (ALL SIZES)	LF	2	4	$4,604.00	$9,208.00
15	ASPHALT REPAIR	EACH	300	39	$37.00	-$9,657.00
16	BERMUDA TIFWAY 419 SOD REPLACEMENT	LF	6,615	5400	$1.50	-$1,822.50
					TOTAL	-$24,600.00

Town of Smyrna
Town Council Meeting
Agenda Summary

Agenda Item Number 5.d.
Department: Utilities
Date: July 14, 2026

Subject:
Approval of the terms of, and authorization for the Mayor to execute, a contract amendment with SEC, Inc relative to Stewart's Creek gravity design.

Fiscal Impact:
$110,035

Contract Type:
Contract Change Order /Amendment

Contract Term (if applicable):
N/A

Background:
The scope of work for the design of the Stewart's Creek gravity sewer project has significant changes from the original gravity design. Redesign for a large portion of the project was required due to having to lower the line below the creek for crossings based on TDEC's environmental review. This also resulted in changing of a portion of the required easements, including new exhibits, surveying and staking the easements. This also required adding a lift station that gravity had to connect with. The US Army CORE of Engineers also required an archeological survey that is currently in process. This additional cost will be cover under the SRF Planning and Design loan we currently have in place.

Summary:
Significant changes to design include additional engineering, permitting support, coordination, survey and design services performed beyond the original scope of work.

Recommended Council Action:
Staff recommends the contract amendment with the SEC for Stewart's Creek gravity design.

Attachments:
1. SEC Amendment
2. Standard Addendum

Site Engineering Consultants
850 Middle Tennessee Blvd
Murfreesboro, TN 37129
(615)890-7901
www.sec-civil.com

May 18, 2026

Mr. Mark Parker P.E.
Assistant Director of Utilities
Town of Smyrna
315 South Lowry Street
Smyrna, TN 37167

RE: Proposal for Professional Services
Stewarts Creek Sanitary Sewer Additional Services
Smyrna, TN

Dear Mark,

We appreciate your continued interest in SEC, Inc. and the opportunity to submit this proposal for additional services associated with the Stewarts Creek Sanitary Sewer project.

SEC, Inc.'s original scope of services for the Stewarts Creek Sanitary Sewer Gravity Line Extension – Phase 2 included the following:

"Phase 2 design involved a main trunk line of 18-24" gravity sanitary sewer along Stewarts Creek, approximately 36,000 LF, extending from an existing manhole at the Meadows Subdivision near Baker Road and I-24 to the north corner of Tax Map 95, Parcel 7 (8294 Almaville Hwy 102), located north of I-840. Phase 2 also included two spur gravity sanitary sewer routes as follows: (1) abandonment of the Amberton Lift Station at Morton Lane and extension of a 12" gravity sanitary sewer downstream to connect to the proposed Stewarts Creek sanitary sewer trunk line, approximately 6,500 LF; and (2) extension of 12" gravity sanitary sewer from the Stewarts Creek sanitary sewer trunk line approximately 2,500 LF to serve the Life Point Church and MTE substation corridor. SEC, Inc. was to utilize recently acquired LiDAR topographic data and perform field survey services for project route boundary limits, drainage inverts, existing utilities, and sewer inverts."

Project Revisions and Scope Modifications

During design development, multiple project revisions and additional scope items were incorporated beyond the original conceptual services, including the following:

1. Alignment and Vertical Design Revisions

- Original design criteria contemplated aerial stream crossings. Subsequent vertical adjustments were made to address stream crossing constraints and project constructability considerations.
- Following coordination with regulatory agencies, the project starting point was shifted downstream approximately 2,200 LF to I-24, requiring redesign of affected portions of the alignment.
- The Town elected to revise pipe material from ductile iron pipe (DIP) to DR-18 PVC as a cost consideration, resulting in additional profile and design revisions.

Initial _____

- To improve creek clearance and increase future capacity, portions of the system were revised to include 30-inch gravity sewer, which also resulted in incorporation of a sewage lift station due to downstream elevations.
- Certain spur line sizes were revised from 12-inch to 15-inch, requiring additional profile revisions.

Additional Services

A. Newberry Subdivision Future Lift Station
Addition of a future phase lift station north of the creek within the Newberry Subdivision area, including demolition plans and approximately 517 LF of new 8-inch gravity sewer.
(517 LF × $5.00/LF) **$2,585**

B. Stewart Springs STEP System Modifications
Design of approximately 1,850 LF of force main associated with impacts to existing drip field zones, along with evaluation of system conditions related to gravity sewer and force main service options.
(1,850 LF × $4.00/LF) **$7,400**

C. Phase I Cultural Resources Survey
Phase I Cultural Resources Survey associated with 25 open-cut stream crossings in support of permitting and agency coordination.
Survey Services **$8,625**

D. Hydrologic Determination Study
Hydrologic Determination Study **$7,500**

E. Chandler Tract Sewer Redesign
Redesign of sewer alignment through the Chandler Tract, including easement revisions and approximately 950 LF of revised alignment.
(950 LF × $8.50/LF) **$8,100**

F. Aquatic Resource Alteration Permit (ARAP)
Preparation and coordination of permit documentation associated with stream crossings.
ARAP Services **$7,500**

G. Division of Project into Three Bid Phases
Project division into multiple construction bid packages, resulting in additional engineering and administrative coordination associated with separate bidding, meetings, submittals, and closeout activities.
a. Phase 2
(8,995 LF × $2.75/LF) **$24,735**
b. Phase 3
(3,487 LF × $2.75/LF) **$9,590**

H. Verification of Existing Manhole Inverts
Field verification of existing manhole inverts at project starting points and approximately every 2,000 LF along the corridor (29 locations).
Verification Services **$21,000**

I. Easement Staking
Construction easement staking and exhibit support services.
Easement Staking **$7,500**

Initial _____

J. Downstream Gravity Sewer Design
Additional downstream gravity sewer extension design revisions associated with project alignment modifications.
(2,200 LF × $2.50/LF) **$5,500**

Summary
The items outlined above reflect additional engineering, permitting support, coordination, survey, and design services performed beyond the original conceptual scope. Project modifications occurred as a result of agency coordination, alignment revisions, owner-directed material changes, permitting considerations, phased construction implementation, and additional field conditions identified during design progression.

We propose to provide our professional services for this study as follows:

PROFESSIONAL SERVICES

Stewarts Creek Sanitary Sewer Extension Phase 2 Updates

A.) **Newberry Subdivision Future Lift Station (517 LF × $5.00/LF) =**	**$2,585**
B.) **Stewart Springs STEP System Modifications (1,850 LF × $4.00/LF) =**	**$7,400**
C.) **Phase I Cultural Resources Survey =**	**$8,625**
D.) **Hydrologic Determination Study**	**$7,500**
E.) **Chandler Tract Sewer Redesign (950 LF × $8.50/LF) =**	**$8,100**
F.) **Aquatic Resource Alteration Permit (ARAP) =**	**$7,500**
G.) **Division of Project into Three Bid Phases**	
a.) Phase (8,995 LF × $2.75/LF) =	**$24,735**
b.) **Phase 3 (3,487 LF × $2.75/LF) =**	**$9,590**
H.) **Verification of Existing Manhole Inverts =**	**$21,000**
I.) **Easement Staking =**	**$7,500**
J.) **Downstream Gravity Sewer Design (2,200 LF x $2.50/LF) =**	**$5,500**
Total Additional Updated Phase 2 Cost	**$110,035**

All reports, drawings, specifications, computer files, field data, notes, and other documents and instruments prepared by SEC, Inc. as instruments of service shall remain the property of SEC, Inc. SEC, Inc. shall retain all common law, statutory, and other reserved rights, including, without limitation, the copyrights thereto.

Services other than those listed in the Scope of Work and Services written above, performed by SEC, Inc. will be charged at our then hourly rates. This could include but is not limited to any work addressing boundary dispute or conflict resolution, additional meetings with adjoiners, court appearances, testimony, additional exhibits, and documents prepared for any dispute/conflict and property line agreements.

Client will be notified of any additional potential fees resulting from these issues and work will not proceed to resolve these issues without express Client approval. Any submittal or recording fees or other unnamed special services that might be required by any regulatory agency are not included in this proposal. Upon your request, we will supply these services to you at our then current hourly rates or a negotiated lump sum fee. Lastly, any service performed by SEC, Inc. outside the scope of services described here in will be charged at our then hourly rates.

Initial _____

Currently, our hourly rates are as follows:

PROFESSIONAL SERVICES HOURLY RATE SCHEDULE

Principal Engineer	$225
Senior Engineer	$200
Professional Engineer, P.E.	$180
Professional Landscape Architect	$180
Registered Land Surveyor	$160
Senior Surveyor	$180
Survey Manager	$130
Engineer Intern	$130
Landscape Architect Intern	$115
Qualified Hydrologic Professional	$160
Hydrologic Intern	$100
Senior Site Designer	$130
Site Designer	$120
Construction Specialist	$120
Survey Crew Chief	$85
Staff Survey Technician	$75
Survey CAD Technician	$100
Clerical Support	$80
2-Man Survey Crew	$180
3-Man Survey Crew	$240
1-Man GPS/Robotic Crew	$150
1-Man Drone	$225

Excluded from the basic services listed above are ARAPs for stream crossings, environmental assessments, offsite easement acquisitions or descriptions, as-built surveys, record drawings, structural design, geotechnical studies, off-site designs, or studies (including utilities, roads, & drainage) and cost estimating. Also considered beyond our scope of work is wetland or stream delineation, submittal fees, or recording fees, or other unnamed special services that might be required by any regulatory agency. Reimbursable expenses shall be billed at cost plus 15%.

This proposal is valid for 60 days. If the proposal is not accepted within 60 days, SEC, Inc. reserves the right to revise the scope of work and fee schedule. The lump sum fees listed above are valid for six months from date of acceptance of proposal. If work continues for longer than twelve months, SEC, Inc. may negotiate revised fees for remaining work items.

The Client also warrants to SEC, Inc. that if the Client designates an individual or company to act as the Client's project manager/agent, the Client is authorizing and granting the project manager full authority to execute documents and bind and obligate the Client for services and payment to SEC, Inc. be it by e-mail, phone, or contract.

Exhibit A – SEC, Inc.'s General Provisions of Engineering and/or Surveying Agreement is attached and incorporated as an integral part of this letter-type agreement. We will bill for our services at monthly intervals based on the percentage of completion as we progress. Accounts are due and payable within thirty (30) days of the date of invoice and are assessed a late payment charge of 1.5% per month of the overdue amount. We accept payment by check, cash, and credit cards. If payment is by credit card, a 2% fee will be added to the total for processing fees.

If our proposal as outlined is acceptable to you, please indicate by initialing each page of this proposal and affixing your signature on the line provided below. In addition, initial pages 1 and 2 and place your signature on page 3 of Exhibit A. Please mail, email, or fax the entire proposal package to SEC so that we may also sign the documents and send you a copy.

Initial _____

You or SEC, Inc. may terminate this agreement for reasons which may arise. In the event such termination becomes necessary, the party effecting termination shall so notify the other party and termination shall become effective fourteen (14) calendar days after receipt of the termination notice. Irresponsive of which party shall affect termination or the cause thereof, you shall, within thirty (30) calendar days of termination, remunerate SEC for services.

If you have any questions or if I may be of further assistance, I can be contacted by phone at 615-890-7901. My email address is jreed@sec-civil.com. Our fax number is 615-895-2567.

Sincerely,

James F. Reed III

Jamie Reed P.E., R.L.S.
President / CEO
SEC, Inc.

Client – Accepted By: _____, _____
Print Name Authorized Signature

as _____ for _____
Title/Ownership/Officer Company Name

on this _____ day of May 2026.

SEC – Accepted By: James F Reed, III, _____
Authorized Signature

as President / CEO for SEC, Inc. on this _____ day of May 2026.

Billing Information

Contact Mike Strange Phone 615-355-5711

Address 315 S. Lowry Street Smyrna, TN. 37167 Email michael.strange@townofsmyrna.org

_____ Cell 615-477-7469

SEC, Inc. is switching to electronic invoicing.
Please provide email utility.invoices@townofsmyrna.org

Initial _____

Site Engineering Consultants, Inc.
Exhibit A
General Provisions of Engineering and/or Surveying Agreement

ARTICLE 1 GENERAL

These General Provisions are incorporated as an integral part of the letter-type agreement to which they are attached between SEC, Inc. and the CLIENT (OWNER) of the Project addressed in such letter-type agreement, wherein the CLIENT engages SEC, Inc. to provide certain engineering, land surveying and/or landscape architectural services on a Project.

As used herein, the term "this Agreement" refers to (1) the SEC, Inc. Proposal Letter which becomes the Letter Agreement upon its written acceptance by the CLIENT, (2) these General Provisions and (3) any attached Exhibits, as if they were part of one and the same document. In event that these provisions conflict with the proposal letter or exhibits, the proposal letter and its exhibits shall govern.

ARTICLE 2 PERIOD OF SERVICE

The term of this Agreement for the performance of services hereunder shall be as set forth in the Letter Agreement. In this regard, any lump sum or estimated maximum payment amounts set forth in the Letter Agreement have been established in anticipation of an orderly and continuous progress of the Project in accordance with the schedule set forth in the Letter Agreement or any Exhibits attached thereto. Unless the schedule is a requirement of the Agreement, the work shall proceed in a timely manner as determined by SEC, Inc.

ARTICLE 3 COMPENSATIONS TO SEC, Inc.

A. Compensation to SEC, Inc., for professional services described in this Agreement shall be on a Lump Sum basis and/or an Hourly Rate basis as designated in the Letter Agreement and as hereafter described.
   1. A Lump Sum method of payment for SEC's services shall apply to all parts of a work scope where SEC's tasks can be readily defined and/or where the level of effort required to accomplish such tasks can be estimated with a reasonable degree of accuracy. The CLIENT shall make monthly payments to SEC within 30 days of date of invoice based on an estimated percentage of completion of SEC's services.
   2. An Hourly Rate method of payment for SEC's services shall apply to all or parts of a work scope where SEC's tasks cannot be readily defined and/or where the level of effort required to accomplish such tasks cannot be estimated with any reasonable degree of accuracy. Under an hourly method of payment, SEC shall be paid for the actual hours worked on the Project by SEC's technical personnel times an hourly billing rate established for each employee. Hourly billing rates shall include compensation for all salary costs, payroll burden, general and administrative overhead and professional fee. A rate schedule shall be furnished by SEC to CLIENT upon request. The CLIENT shall make monthly payments within 30 days of the invoice based on the amount of work completed.

B. In addition to the foregoing, SEC shall be reimbursed at cost for the following Expenses when incurred in the performance of the work:
   1. Travel and subsistence.
   2. Outside professional and technical services and agency fees with cost defined as the amount billed SEC plus 10%.
   3. Identifiable reproduction, reprographic, and delivery costs.

The CLIENT shall make monthly payments to SEC within 30 days of date of invoice for services provided and expenses incurred to date accompanied by supporting evidence as required and stated in the Letter Agreement.

C. The CLIENT will pay the balance stated on all invoices unless CLIENT notifies SEC in writing of the particular item that is alleged to be incorrect within 15 days from the date of receipt of the invoice, in which case, only disputed item will remain undue until resolved by the parties. All accounts unpaid after 30 days from the date of original invoice shall be subject to a service charge of 1-1/2% per month, or the maximum amount authorized by law, whichever is less. In addition, SEC may, after giving 7 days written notice to the CLIENT, suspend services under this Agreement until SEC has been paid in full for all amounts then due for services, expenses and charges. The CLIENT additionally agrees to pay all attorney fees, collection fees, court and lien costs, and other such expenditures incurred to satisfy any unpaid balance.

ARTICLE 4 GOVERNMENT APPROVALS

SEC shall provide services defined herein based on education, training, experience, and judgment as a design professional familiar with the industry. Since SEC has no control over government agencies responsible for review and approval of designs, SEC cannot and does not guarantee government approval.

SEC shall not be liable for damages resulting from the actions or inactions of government agencies, and SEC shall only act as an advisor in all government relations. CLIENT agrees that payment of professional fees is not contingent upon approvals by a governmental body or agency.

ARTICLE 5 EXTRA WORKS

If SEC is of the opinion that any work they have been directed to perform is beyond the Scope of this Agreement, or that the level of effort required significantly exceeds that estimated due to changed conditions and thereby constitutes extra work, they shall promptly notify the CLIENT of that fact. Extra work and additional compensation for same has been described and covered in the letter-type agreement. In the event of an unresolved dispute over change in scope or changed conditions, this Agreement may be terminated upon 7 days written notice as provided in Article 6.

ARTICLE 6 ABANDONMENTS, CHANGE OF PLAN AND TERMINATION

Either Party has the right to terminate this Agreement upon 7 days written notice. In addition, the CLIENT may at any time, reduce the scope of this Agreement. Such reduction in scope shall be set forth in a written notice from the CLIENT to SEC.

In the event of reduction in scope of the Project work, SEC shall be paid for the work performed and expenses incurred on the project work thus reduced and for all completed and abandoned work, for which payment has not been made, computed in accordance with the provisions of Article 3 and the Letter Agreement.

In the event of termination and payment by the CLIENT of amounts due for work performed and expenses incurred to the

_____Initials

date and time of termination, computed in accordance with the provisions of Article 3 and the Letter Agreement, all documents, finished or unfinished, prepared by SEC under this Agreement shall be made available by SEC to the CLIENT and there shall be no further obligation of the CLIENT to SEC under this agreement.

ARTICLE 7 OWNERSHIPS OF INSTRUMENTS OF SVCS

All reports, plans, specifications, computer files, field data, notes and other documents and instruments prepared by the Consultant as instruments of service shall remain the property of the Consultant. The Consultant shall retain all common law, statutory and other reserved rights, including, without limitation, the copyright thereto.

ARTICLE 8 DISPOSITIONS OF PLANS, REPORTS AND OTHER DATA

At the time of completion or termination of the work, SEC shall make available to the CLIENT paper copies of all maps, tracings, reports, resource materials and other documents pertaining to the work or to the Project. All such documents are not intended or represented to be suitable for reuse by the CLIENT or others on extensions of the Project or any other project. Any reuse without verification or adaptation by SEC for the specific purpose intended will be at CLIENT's sole risk and without liability or legal exposure to SEC. In this regard, the CLIENT will indemnify and hold harmless SEC from any and all suits or claims of third parties arising out of such reuse, including legal expenses, which is not specifically verified, adapted or authorized by SEC.

ARTICLE 9 CLIENT'S RESPONSIBILITIES

A. To permit SEC to perform the services required hereunder, the CLIENT shall provide, in proper time and sequence, the following at no expense to SEC all necessary information regarding CLIENT requirements as necessary for orderly progress of the work.
   1. Designate in writing, one person to act as CLIENT's representative with respect to the services to be rendered under this Agreement. Such person shall have authority to transmit instructions, receive instructions, receive information, interpret and define CLIENT's policies with respect to SEC's Services.
   2. Furnish, as required for performance of SEC's services (except to the extent as provided otherwise in the Letter Agreement or any Exhibits attached hereto), data prepared by or services of others, including without limitation, core borings, probings and subsurface explorations: laboratory tests and inspections of samples; appropriate professional interpretations of all of the foregoing; environmental assessment and impact statements; property, boundary, easement, right-of-way, topographic and utility surveys; property descriptions: zoning, deed and other land use restrictions; and other special data not covered in the Letter Agreement or any Exhibits attached hereto.
   3. Provide access to, and make all provisions for SEC to enter upon publicly or privately owned property as required to perform the work.
   4. Act as liaison with other agencies or involved parties to carry out necessary coordination and negotiations; furnish approvals and permits from all governmental authorities having jurisdiction over the Project and such approvals and consents from others as may be necessary for completion of the Project.
   5. Examine all reports, sketches, drawings, specifications and other documents prepared and presented by SEC, obtain advice of an attorney, insurance counselor or others as CLIENT deems necessary for such examination and render, in writing, decisions pertaining thereto within a reasonable time so as not to delay the services of SEC.
   6. Give prompt written notice to SEC whenever CLIENT observes or otherwise becomes aware of any development that affects the scope or timing or SEC's services or any defect in the work of Construction Contractor(s), Consultants or SEC.
   7. Initiate action where appropriate, to identify, remove and/or encapsulate asbestos products or materials or other such hazardous materials located in the Project area prior to accomplishment of any work contemplated under the Project.
   8. Provide such accounting, independent cost estimating and insurance counseling services as may be required for the Project, such legal services as CLIENT may require or SEC may reasonably request with regard to legal issues pertaining to the Project including any that may be raised by Contractor(s), such auditing service as CLIENT may require to ascertain how or for what purpose any Contractor has used the moneys paid under the construction contract, and such inspection services as CLIENT may require to ascertain that Contractor(s) are complying with any law, rule, regulation, ordinance, code or order applicable to their furnishing and performing the work.
   9. Provide "record" drawings and specifications for all existing physical plants or facilities which are pertinent to the Project.
   10. Provide other services, materials, or data as may be set forth in the Letter Agreement or any Exhibits attached hereto.

SEC shall be entitled to rely on the accuracy and completeness of information furnished by the CLIENT. If SEC finds that any information furnished by the CLIENT is in error or is inadequate for its purpose, SEC shall promptly notify the CLIENT.

ARTICLE 10 OPINIONS OF COST

Opinions of probable project cost, construction cost, financial evaluations, feasibility studies, economic analyses of alternate solutions and utilitarian considerations of operations and maintenance costs provided for in the Letter Agreement or any Exhibits attached hereto, are made on the basis of SEC's experience and qualifications and represents SEC's judgment as an experienced and qualified design professional. It is recognized, however, that SEC does not have control over the cost of labor, material, equipment or services furnished by others or over market conditions or contactors' methods of determining their prices, and that any evaluation of any facility to be constructed, or acquired, or work to be performed on the basis of SEC's cost opinions, must of necessity, be speculative until completion of construction or acquisition. Accordingly, SEC does not guarantee that proposals, bids or actual costs will not substantially vary from opinions, evaluations or studies submitted by SEC to CLIENT hereunder.

ARTICLE 11 CONSTRUCTION PHASE SERVICES CLIENT acknowledges that it is customary for the engineer who is responsible for the preparation and furnishing of Drawings and Specifications and other construction-related documents to be employed to provide professional services during the Bidding and Construction Phases of the Project, (1) to interpret and clarify the documentation so furnished and to modify the same as circumstances revealed during bidding and construction may dictate, (2) in connection with acceptance of substitute or equal items of materials and equipment proposed by bidders and Contractor(s), in connection with approval of shop drawings and

_____Initials

sample submittals, and (3) as a result of and in response to SEC's detecting in advance of performance of affected work inconsistencies or irregularities in such documentation.

CLIENT agrees that if SEC is not employed to provide such professional services during the Bidding (if the work is put out for bids) and the Construction Phases of the Project, (1) SEC will not be responsible for, and CLIENT shall indemnify and hold SEC (and SEC's professional associates and consultants) harmless from all claims, damages, losses and expenses including attorneys' fees arising out of, or resulting from, any interpretation, clarification, substitution acceptance, shop drawing or sample approval or modification of such documentation issued or carried out by CLIENT or others and (2) the CLIENT assumes all responsibility for interpretation of the contract documents and for construction observation. Nothing contained in this paragraph shall be construed to release SEC (or SEC's professional associates or consultants) from liability for failure to perform in accordance with professional standards any duty or responsibility which SEC has undertaken or assumed under this Agreement.

Neither the professional activities of SEC, nor the presence of SEC or its employees and subconsultants at a construction site, shall relieve the General Contractor of its obligations, duties and responsibilities including, but not limited to, construction means, methods, sequence, techniques or procedures necessary for performing, superintending and coordinating the Work in accordance with the contract documents and health or safety precautions required by regulatory agencies. SEC and its personnel have no authority to exercise control over construction contractor or its employees in connection with their work or health or safety programs or procedures. The CLIENT agrees that the General Contactor shall be solely responsible for jobsite safety, and warrants that this intent shall be carried out in the CLIENT's contract with the General Contractor. The CLIENT also agrees that the CLIENT, SEC and SEC's subconsultants shall be indemnified by the General Contractor and shall be made additional insured under the General Contractor's polices of general liability insurance.

ARTICLE 12 ERRORS AND OMISSIONS

SEC's services shall be provided consistent with and limited to the standard of care applicable to such services, which is that Consultant shall provide its services consistent with the degree of care and skill ordinarily exercised by members of the same profession currently practicing under similar circumstances or similar locality. If, after the construction has begun, an error or omission is discovered and the item can still be provided in the sequence of construction without premium cost to the CLIENT, the CLIENT agrees to pay for this item as if it had been included in the original construction documents. If this error or omission is discovered out of sequence with the construction timetable, then SEC will pay for the premium cost to have this item corrected or included, with the CLIENT paying for the item's basic cost as if it had been included in the original documents. If the premium cost falls below 2% of the defined construction cost, then the entire premium cost shall be the responsibility of the CLIENT. This premium cost concept for errors and omissions is not applicable if the CLIENT chooses not to employ SEC during construction phase services per Article 11 above. To the maximum extent permitted by law, the CLIENT agrees to limit SEC's liability for the CLIENT damages to the sum of $50,000 or SEC's fees, whichever is greater. This limitation shall apply regardless of the cause of action or legal theory pled or asserted.

ARTICLE 13 INSURANCE

SEC maintains insurance coverage including Workman's' Compensation Insurance, Employer's Liability Insurance, Commercial General Liability Insurance, Automobile Liability Insurance and Professional Errors and Omission (E&O) liability coverage for the period of design and construction of the Project and for a period of three (3) years following substantial completion, if such coverage is reasonably available at commercially affordable premiums. Certificates of Insurance will be furnished upon request.

ARTICLE 14 ALTERNATIVE DISPUTE RESOLUTIONS

The Client and SEC hereby waive any and all rights to file legal actions in the courts of the State of Tennessee or any other Federal or state court. However, suits filed by SEC against Client for the nonpayment of any bill for services provided by SEC, Inc shall be expressly exempted here from.

The parties or any successors shall endeavor to resolve any controversy or claim arising out of or relating to this agreement, as to services rendered by SEC or otherwise, by mediation, unless both SEC and the Client shall mutually agree otherwise. Said mediation shall be in accordance with the Commercial Mediation Rules (or most appropriate rules of Mediation of the American Arbitration Association applicable to the controversy or claim as decided by said Association) of the American Arbitration Association currently in effect. A Request for mediation shall be in writing and shall be delivered by mail to the other party.

The request may be made concurrently with the filing of a demand for arbitration, but in such event, mediation shall proceed in advance of arbitration or legal or equitable proceedings, which shall be stayed pending mediation for a period of 60 days from the date of the mailing of the demand, unless stayed for a longer period by agreement of the parties or court order.

Any controversy or claim not resolved by mediation shall be decided by arbitration administered by the American Arbitration Association under its Commercial Arbitration Rules, (or most appropriate rules of Arbitration of the American Arbitration Association applicable to the controversy or claim as decided by said Association), and judgment on the award rendered by the arbitrators(s) may be entered and enforced in any court having jurisdiction thereon.

The direct expense of any mediation or arbitration proceeding shall be borne equally by the Client and SEC. Each Party shall bear its own counsel fees. If possible any mediation or arbitration proceeding shall be held in Murfreesboro, Tennessee. Notwithstanding either shall be entitled to seek injunctive or other equitable relief, as a means of protecting any interests or right, from any court of competent jurisdiction, until such time as the mediation or arbitration proceeding can be held.

ARTICLE 15 INDEMNIFICATIONS

In addition, and notwithstanding any other provisions of this Agreement, the CLIENT agrees, to the fullest extent permitted by law, to indemnify and hold harmless SEC, Inc. the legal entity and its directors, officers, employees, agents, shareholders, their families, heirs, and assigns, and subconsultants (collectively, SEC) against all damages, liabilities or costs including reasonable attorneys' fees and defense costs, arising out of or in any way connected with this Project or the performance by the parties above named for the services under this Agreement, excepting only those damages, liabilities or costs attributable to the negligent acts or negligent failure to act by SEC.

ARTICLE 16 ASSIGNMENTS

This Agreement, being intended to secure the personal service of the individuals employed by and through whom SEC performs work hereunder, shall not be assigned, sublet or transferred without the written consent of the CLIENT and SEC.

_____Initials

ARTICLE 17 CONTROLLING LAW
This Agreement is to be governed by the laws of the State of Tennessee.

ARTICLE 18 SEVERABILITY
Any provision or part of this Agreement held to be void or unenforceable under any laws or regulations shall be deemed stricken, and all remaining provisions shall continue to be valid and binding upon the Client and SEC, Inc., who agree that this Agreement shall be reformed to replace such stricken provision as close as possible to expressing the intention of the stricken provision.

ARTICLE 19 FORCE MAJEURE
If an event or circumstance beyond SEC's reasonable control occurs, including without limitation an act of God, fire, flood, hurricane, wind event, storm, weather disturbance, earthquake, pandemic, disease, epidemic, or other viral or bacterial outbreak, government-ordered shutdown, quarantine or shelter-in-place order, an act or omission of a third party, strike, war, riot, terrorism or threat of terrorism, civil unrest, or any other event or circumstance not within the reasonable control of SEC, Inc., whether similar or dissimilar to any of the foregoing, that cause SEC, Inc. delay or additional expense ("Force Majeure Event"), then SEC, Inc. is entitled to an equitable adjustment in the contract price or time for performance, or both. If any Force Majeure Event renders SEC's performance impossible or impracticable, SEC, Inc. has the right to terminate performance under this Agreement consistent with any termination requirements that might exist in this Agreement. Upon occurrence of a Force Majeure Event, SEC, Inc. will notify the Client within a reasonable time that a Force Majeure Event has occurred and its anticipated impact on SEC's performance, including its expected duration. SEC Inc. will use reasonable efforts to mitigate the impact of any Force Majeure Event on the SEC's ability to perform under this Agreement.

ARTICLE 20 CONSEQUENTIAL DAMAGES
Notwithstanding any other provision of this Agreement, and to the fullest extent permitted by law, neither the Client nor SEC, Inc, their respective officers, directors, partners, employees, contractors or subconsultants shall be liable to the other or shall make any claim for any incidental, indirect or consequential damages arising out of or connected in any way to the Project or to this Agreement. This mutual waiver of consequential damages shall include, but is not limited to, loss of use, loss of profit, loss of business, loss of income, loss of reputation and any other consequential damages that either party may have incurred from any cause of action including negligence, strict liability, breach of contract and breach of strict or implied warranty. Both the Client and SEC, Inc. shall require similar waivers of consequential damages protecting all the entities or persons named herein in all contracts and subcontracts with others involved in this project.

ARTICLE 21 GEOTECHNICAL ENGINEER INDEMNIFICATION
In addition, and notwithstanding any other provisions of this Agreement, the CLIENT agrees, to the fullest extent permitted by law, to indemnify and hold harmless SEC, Inc. the legal entity and its directors, officers, employees, agents, shareholders, their families, heirs, and assigns, and subconsultants (collectively, SEC) against all damages, liabilities or costs including reasonable attorneys' fees and defense costs, arising out of or in any way connected with the performance by the Geotechical Engineer.

APPROVED AND ADOPTED:

By:_____
CLIENT DATE

By:_____
SEC, Inc. DATE

_____Initials

STANDARD ADDENDUM TO AGREEMENT

This standard contract addendum is executed on the 18th day of June, 20 26 by and between **THE TOWN OF SMYRNA, TENNESSEE,** a municipal corporation in the State of Tennessee, herein further referenced and identified as ("The Town") and SEC Inc. herein further referenced and identified as ("Vendor") in order to amend the terms of the Agreement, including all attachments, exhibits, or any actual or virtual documents or writing, including, but not limited to, all any "clickwrap," "clickthrough" or "click and accept" agreement or other Terms of Service scheduled for presentation to the Town Council for approval on the ____ day of June, 20 26.

WITNESSETH

WHEREAS, the parties wish to execute this addendum to the Agreement for the purposes of substituting, clarifying or inserting certain terms of or into their original Agreement executed on the _____ day of June, 20 26; and

WHEREAS, the terms of this addendum to the Agreement shall take precedence over all other terms, conditions or language to the contrary or in conflict with the language contained in the Agreement; however, any term or clause not modified by the provisions herein shall be governed by the original agreement. The parties agree that this addendum shall not be construed to create any ambiguity, it being the expressed intent of the parties that this addendum shall control;

THEREFORE, In consideration of using Vendor's form Agreement, the mutual promises set out herein, and other good and valuable consideration, the sufficiency of which is hereby acknowledged by Vendor the parties hereto agree to the following:

1. VENUE: The parties agree that venue for any legal or other dispute arising under the terms of the original agreement or this addendum to agreement shall lie exclusively in the courts of Rutherford County, Tennessee or the United States District Court, for the Middle District of Tennessee. The parties hereby waive their right to a jury trial;

2. CHOICE OF LAW: The Agreement shall be deemed to be entered into under Tennessee law, and the rights and obligation of the parties are governed by the laws of the State of Tennessee, without regard to its conflict of laws principles, and all obligations of the parties are performable in Smyrna, Tennessee.

3. INDEMNIFICATION: The parties hereto agree that Vendor shall indemnify The Town for any and all claims of negligence, tortious conduct or otherwise unlawful acts committed by Vendor in the performance of their obligations under the terms of the original agreement or this addendum to agreement and Vendor agrees to pay any and all costs associated with the enforcement of the terms of this indemnity agreement by The Town, including but not limited to, court costs, civil judgments, assessments or any other reasonable fees associated therewith. In addition, Article II, Section 29 of the Tennessee Constitution prohibits municipalities from lending their credit to private or public entities and, therefore, prohibits an agreement by the Town to indemnify a third party or agree to a limitation of liability provision. Any indemnity or hold harmless provision contained in the Agreement requiring the Town to indemnify or hold harmless Vendor or any other person or entity or any limitation of liability in favor of Vendor shall be deemed null, void and unenforceable against the Town under any and all circumstances.

4. NON-APPROPRIATION: Vendor acknowledges that the Town is a governmental entity, and the validity of the Agreement is based upon the availability of public funding under its authority. In the event the Town fails to appropriate funds or make monies available for any fiscal year covered by the term of the Agreement for services to be provided, the Agreement shall be terminated on the last day of the fiscal year for which funds were appropriated or monies made available for such purposes without liability to the Town, and such termination shall not be a breach of the Agreement, and any unused payment made to Vendor shall be returned to the Town.

5. TAX EXEMPTION: As a tax-exempt entity, the Town shall not be responsible for sales or use taxes incurred for products or services. The Town shall supply Vendor with its Sales and Use Tax Exemption Certificate upon Vendor's request. Vendor shall bear the burden of providing its suppliers with a copy of the Town's tax exemption certificate and Vendor shall assume all liability for such taxes, if any, that should be incurred.

6. NO ATTORNEY'S FEES: The parties hereto agree that The Town shall be in no event liable for any attorney's fees which Vendor may incur due to breach of the original agreement or this addendum agreement by either party; and further, The Town shall not acquiesce to any term of the original contract/agreement that indicates or infers The Town may or shall be responsible for the fees of another party or the Vendor's attorney fees.

7. MEDIATION; NO ARBITRATION: The Town may, at its option, require the attempted resolution of any dispute arising under the original contract or this addendum to agreement by mediation prior to the filing of any lawsuit or other claim. Should any dispute arise, Vendor shall provide the Town notice of any intent to file suit by certified mail. The Town shall notify the Vendor of its intent to exercise its right to mediation within thirty (30) days of receiving such notice. If the Town does not exercise its right to mediation, Vendor may file suit. Any mediator selected under this clause shall be agreed upon by the parties and the costs of such mediation shall be divided and paid equally between the parties. The parties hereby further agree that, except as provided for in this addendum or by applicable law, the parties shall not be required to participate in any alternative dispute resolution process or procedure, including but not limited to arbitration and med-arb, relating to disputes that arise between the parties to the Agreement.

8. FAILURE TO PERFORM: The parties agree, in the event Vendor fails to perform any obligation, other than with regards to the date of delivery, set out in the Agreement/Contract, the Town shall be reimbursed by Vendor for any and all expenses associated with having to obtain a new provider to finish out the contracted term, including, but in no way limited to, any charges/fees, which are above and beyond the amount the Town would have paid to Vendor to complete the same task; provided, however, that if the failure, by its nature, is one that can be cured, the Vendor shall have

fifteen (15) business days after receipt of written notice from the Town to cure said failure to perform. The parties hereby agree, unless a specific date of delivery is provided in the Agreement/Contract all deliveries shall be made to the Town no later than ninety (90) days from the date of the Agreement/Contract. The parties further agree that if Vendor, in good faith, is not able to meet this ninety (90) day deadline of delivery due to forces beyond his, her or its control, that were unforeseeable at the time of signing the Agreement/Contract, then the entire Agreement/Contract shall be voidable at the sole discretion of the Town. Should the Town elect to void the Agreement/Contract due to Vendor's good faith inability, due to forces beyond his, her or its control, and which were unforeseeable at the time of signing the Agreement/Contract to meet the delivery deadline, then neither party shall be deemed to have breached the Agreement/Contract, and Vendor shall return all monies, within seven (7) business days, paid by the Town for the products/items that could not be delivered in the allotted time. This provision shall take propriety over any Force Majeure Clause contained within the Agreement/Contract.

9. USE OF TOWN's LOGO OR NAME: Vendor shall not use the Town's name or any logo in marketing or publicity materials or for marketing or publicity purposes without the prior written authorization from the Town. Vendor shall not issue, publish, or divulge any materials developed or used in the performance of this Agreement or make any statement to the media relating to this Agreement without the prior written consent of the Town.

10. WARRANTY: Vendor warrants that the product(s) herein, when used in accordance with the documentation, shall operate and conform in all material respects in conformity with this Agreement and the written representations of Vendor, including applicable user manuals and guides supplied by Vendor or with Vendor's Software. If it does not perform as warranted, Vendor shall use all commercially reasonable efforts to correct the product(s) so that it operates in all material respects in conformity with the written representations of Vendor. If Vendor cannot correct the product(s) within a reasonable period of time, Vendor shall refund the purchase price of the product(s).

11. SOFTWARE DEADLINE, TESTING AND ACCEPTANCE: If applicable to the Agreement, software provided by Vendor shall be installed for the purposes of

testing, as stated herein below, no later than one hundred twenty (120) days from the effective date of the Agreement and this Addendum thereto, unless the Agreement states a specific date which is before or after said deadline. In Addition, software provided by Vendor to the Town is subject to inspection and testing to verify that the software conforms to its written specifications and to ensure it meets the Town's needs. The Town shall have seven (7) business days after the software is installed to perform testing of the software using the Town's data. The Town shall provide Vendor with written notice of acceptance or rejection of the software five (5) business days or less after the end of the testing period. If the Town does not provide timely written notice of acceptance or rejection to Vendor, the software shall be deemed to be accepted by the Town. If the software is rejected, the Town may, at its sole discretion, either (1) return the software and receive a refund of all fees paid with respect thereto, or (2) allow Vendor to repair or replace the software, without charge, in a timely manner. In the event the Town elects to allow the Vendor to repair or replace the software, the Town shall have an additional (7) business days in which to accept or reject the software as laid out hereinabove.

12. NO AUTOMATIC RENEWAL: The term of the Agreement shall not be renewed or extended beyond the initial term and any provision providing for automatic or continuing renewal of the Agreement is not applicable.

13. UNILATERAL MODIFICATION OF AGREEMENT NOT PERMITTED: Vendor may make unilateral changes to its Privacy Policy, provided any such changes are subject to the provisions of this Addendum, shall not alter this Addendum, and shall not materially alter the use of the service or reduce the level of protection provided to the Town at the time of the execution of this Agreement. Except as provided in the preceding sentence, notwithstanding anything in the Agreement to the contrary, any change to the Agreement made by Vendor that is not in writing and that is not properly executed by the signatures of authorized representatives of the parties hereto, including attestation by the Town's Clerk and approved as to form by the Town Attorney are subject to the terms and conditions of this Addendum, and shall not alter this Addendum and shall not materially alter the use of the service or reduce the level of protection provided to the Town at the time of the execution of this Agreement.

14. CHANGES TO TERMS. Except as provided in Paragraph No. 13 above pertaining to Vendor's Privacy Policy, Vendor shall provide the Town written notice, sent in care of Town Attorney's Office, Smyrna, Tennessee, 315 South Lowry Street, Tennessee 37167, of any proposed change to the Agreement at least ninety (90) days prior to being effective to the Town. The Town shall have thirty (30) days after receiving the written notice to terminate this Agreement, and such cancellation shall not be a breach of this Agreement. Vendor will refund to the Town any payment made by the Town to Vendor equal to the difference between the number of months the payment was intended for and the number of months remaining on Agreement that the fee was intended to cover.

15. PRICE ASSURANCE: Unless specifically stated in the Agreement, the price shall be valid for the full term of the Agreement. If Vendor, specifically states, in the Agreement that he, she or it cannot honor the price for the full term of the Agreement; the Agreement is voidable at the sole discretion of the Town, if at any time during the full term of the Agreement, Vendor requests to raise the contract price. If the Town elects to void the Agreement, at its sole discretion, it shall not be deemed to be a breach of the contract by either party.

16. CONFIDENTIALITY: The Town, as a Tennessee Municipal Corporation is subject to the Tennessee Open Records Act, set out in T.C.A. §10-7-503 et seq; therefore, this Addendum, the Agreement and all documents or materials, in any format, including, but not limited to paper, electronic or virtual, that are public records pursuant to law, are not confidential and are subject to disclosure, without regard to any provision contained in the Agreement declaring information confidential. The Town will respond to all proper Open Records Requests in the time allowed by law, without any requirement to disclose such request to Vendor or provide Vendor with notice or the time to obtain a protective order. The Town does not have the burden of establishing that information is not confidential information or that its release is authorized to release the records. This section 16 serves to meet such burden and authorization of disclosure.

17. BOYCOTT OF ISRAEL: The Vendor certifies that it is not currently engaged in, and covenants that it will not, for the duration of the Contract, engage in a Boycott of Israel, as that term is defined in Tenn. Code Ann. § 12-4-119.

18. NO PRESUMPTION AGAINST DRAFTER: The parties are both business entities having substantial experience with the subject matter of this addendum, and each has fully participated in the negotiation and drafting of this addendum. Accordingly, this addendum shall be construed without regard to the rule that ambiguities in a document are to be construed against the draftsman. No inferences shall be drawn from the fact that the final, duly executed addendum differs in any respect from any previous draft hereof.

19. SURVIVAL: This entire addendum shall survive the completion of or any termination of the Agreement or other document which may accompany the Agreement or be incorporated by reference and shall remain in full force and effect until the expiration of any applicable statute of limitation.

20. EFFECTIVE DATE: This addendum shall be deemed to have the same effective date of the Agreement.

(execution page follows)

IN WITNESS WHEREOF, the parties hereto warrant and represent that the individual who has signed this addendum on behalf of such party is duly

authorized by all necessary and appropriate corporate action to sign this addendum.

James T Lee III CEO, President

VENDOR OR AGENT

VENDOR OR AGENT

MAYOR OF SMYRNA, TENNESSEE

Town of Smyrna
Town Council Meeting
Agenda Summary

Agenda Item Number 5.e.
Department: Public Works
Date: July 14, 2026

Subject:
Approval of the terms of, and authorization for the Mayor to execute, a contract with Icon Custom Masonry, Inc. for construction of two monument signs to be installed along Lowry Street (SR-1).

Fiscal Impact:
The original engineering estimate for this project was set at $130,000. The work is expected to begin next fiscal year and we budgeted $300,000. The only bidder came in at $81,655 for the signs.

Contract Type:
Original Contract

Contract Term (if applicable):
The project is expected to be completed within 60 days of notice to proceed.

Background:
To display a nice welcome sign to visitors, the Public Works Department was requested to work on a project to add two monument signs along Lowry Street. These signs were presented for council approval by Charles King via presentation at the October 14, 2025, regular meeting.

Summary:
One will be placed on the northern border with the City of LaVergne and one on the southern border with the City of Murfreesboro. These monument sign locations have been approved by TDOT.

Recommended Council Action:
Staff recommends the Council approve the Mayor to sign the contract.

Attachments:
1. Bid Tabulation
2. Icon Custom Masonry Inc Bid
3. Gateway Signs Presentation
4. Gateway Sign Details

TOWN OF SMYRNA, TN
GATEWAY MONUMENTATION
BID OPENING SUMMARY
May 27, 2026 @ 2:30 p.m.

Contractor	Total Lump Sum Cost
ICON Custom Masonary Inc.	$ 81,655

Attendee	Company	E-mail
Beth Morris	Town of Smyrna	
Jason Taylor	" "	
Angie Bailey	Town of Smyrna	
Jon Rose	TOS	

LEGAL NOTICE

INVITATION TO SUBMIT QUOTATIONS

The Town of Smyrna will accept quotations for the installation of Gateway Monumentation. Bidders shall submit sealed proposals in the format specified in the Invitation to Submit Quotations no later than 2:30 p.m. May 27, 2026 at which time proposals will be publicly opened and read aloud. No bid may be withdrawn after the scheduled closing time for a period of 90 days. Bidding documents may be obtained at Smyrna Town Hall during regular business hours or www.townofsmyrna.org. Quotations should be mailed or hand delivered to:

Purchasing Department
Smyrna Town Hall
Sealed Bid on Gateway Monumentation / May 27 @ 2:30 p.m.
315 South Lowry Street
Smyrna, TN 37167

Verbal quotations or quotations received after the closing date will not be accepted. The Town of Smyrna reserves the right to reject any and all bids, to waive technicalities or informalities and to accept any bid deemed to be in the best interest of the Town.

All Bidders must be licensed Contractors in the State of Tennessee in strict accordance with State regulations. All bidders shall comply with the Tennessee Contractor' License law Section 62-6-119 (Bid documents - Required disclosure by bidders) when submitting bids. Please refer to State Licensing Board https://www.tn.gov/commerce/regboards/contractors.html for all applicable licensing laws.

The Town of Smyrna will not discriminate in the purchase of all goods and services on the basis of race, color, religion, sex, national origin, age, disability or any other lawfully protected classification.

SUBMITTED BY: Sierra Lowry
Finance Director

TO BE RUN: MAY 12, 2026

TABLE OF CONTENTS

		Page
Section I	- General Information	3
Section II	- Specifications	4
Section III	- Price Quotation	9
	Required Forms	10-21
Section IV	- Specification Compliance	22

SECTION I - GENERAL INFORMATION

A. The Town of Smyrna desires quotations on the installation of Gateway Monumentation at the north and south town limits on South Lowry Street located in Smyrna, TN.

Questions should be directed to Jason Taylor, Engineer, Office (615) 267-5007 or E-mail: jason.taylor@townofsmyrna.org.

B. The Town of Smyrna reserves the right to reject any and all bids, to waive technicalities or informalities and to accept any bid deemed to be in the best interest of the Town. No bid may be withdrawn after the scheduled closing time for a period of 90 days.

C. The bidder shall abide by and comply with the true intent of the specifications and not take advantage of any unintentional error or omission, but shall fully address the full intent and meaning of each aspect of the specifications.

D. Section II, III, IV, and Required Forms shall be completed and included as an integral part of each bidder's proposal.

E. Successful bidder will be expected to enter into a contract Agreement with the Town of Smyrna. Agreement shall be signed and attested (but not dated) by the proper business representative and submitted with the bid proposal.

F. Freight shall be paid by vendor and should be included in unit price bid.

G. The Town is a tax-exempt organization.

H. Mail is delivered after 11:00 a.m. Monday through Friday.

I. The Town of Smyrna, in accordance with Title VI of the Civil Rights Act of 1964 and Title 49, Code of Federal Regulations, hereby notifies all Bidders that it will affirmatively insure that in any contract entered into pursuant to this advertisement, minority business enterprises will be afforded full opportunity to submit bids in response to this invitation and will not be discriminated against on the grounds of race, color, creed, sex, handicap or national origin in consideration for an award.

J. Bid quotations *must* be submitted on the Town's quotation page(s). No exceptions.

K. By submission of this bid, each bidder/proposer and each person signing on behalf of any bidder certifies, and in the case of a joint bid each party thereto certifies as to its own organization, under penalty of perjury, that to the best of its knowledge and belief that each bidder is not on the list created pursuant to T.C.A. § 12-12-106 Iran Divestment Act. For reference purposes, the list is currently available online at: State of TN_Debarred_Vendors.pdf

SECTION II - SPECIFICATIONS FOR GATEWAY MONUMENTATION

SCOPE OF WORK:
The work for which bids are to be submitted consists of furnishing all labor, materials and performing all work required for the installation of a Gateway Monumentation at the north and south town limits on South Lowry Street located in Smyrna, TN.

Construction to include the following but not limited to:

- (2) Monuments approx. 4'-8" x approx. 10'- 6" above ground line with a precast caps, precast keystone, powder coated lettering "TOWN OF SMYRNA EST. 1869" and natural stone encasement
- Low voltage lighting
- Power Meter Service
- Permit Service (Excluding Fees)
- Permit Fees (Allowance)

GENERAL REQUIREMENTS
1. All vendors must visit the site in Smyrna. Call Jason Taylor at 615-267-5007 to schedule an appointment if you need him on-site.
2. Contractor is responsible for locating all utilities in the work area and is responsible for repair to any damaged utilities or facilities.
3. Contractor is responsible for clean up of any debris or damage from their work on the project.
4. The Town Engineer or his designee will perform final inspection before last invoice is paid. Any problems will be communicated to the contractor.

REFERENCE STANDARDS
A. See attached prepared plans

DESIGN REQUIREMENTS
A. Standard Industry practice

QUALITY ASSURANCE
A. Fabricate members in accordance with standard industry practice.

QUALIFICATIONS
A. Contractor shall have proper licensing for work
B. Contractor shall be responsible for all materials, whether furnished by himself or a subcontractor, and proper storage of the same.

REGULATORY REQUIREMENTS
A. Contractor shall be responsible for compliance with all applicable building codes and ordinances covering the work.
B. Contractor shall cooperate with regulatory agencies or authorities to provide data as requested.

PRE-CONSTRUCTION MEETING
A. The meeting will convene no later than one week prior to commencing work.

FIELD MEASUREMENTS

A. Field measurements shall be taken to verify that components match photo.

WARRANTY

A. No Warranty is required.

INSURANCE REQUIREMENTS

The Contractor shall purchase and maintain for the duration of the contract insurance against claims for injuries to persons or damages to property which may arise from or in connection with the performance of the work hereunder by the Contractor, its agents, representatives, employees or subcontractors.

A. MINIMUM SCOPE AND LIMITS OF INSURANCE

1. **Workers Compensation**
   Workers Compensation insurance shall be in compliance with the State of Tennessee and shall be statutory. Employers Liability shall be included with a minimum limit of $500,000 per accident/per disease/per employee.

2. **Commercial General Liability**
   Commercial General Liability insurance shall have a minimum limit per occurrence of $1,000,000 and a minimum general aggregate of $2,000,000. It shall include completed operations, product liability and personal injury liability insurance.

3. **Automobile Liability**
   Automobile Liability Insurance shall have a minimum combined single limit per occurrence of $1,000,000. This insurance shall include third-party bodily injury and property damage liability for owned, hired, borrowed and non-owned automobiles.

B. DEDUCTIBLES AND SELF-INSURED RETENTIONS

Any deductibles or self-insured retentions must be declared to the Town of Smyrna. The Contractor shall be responsible for all deductibles and self-insured retentions.

C. OTHER INSURANCE PROVISIONS

The policies are to contain, or be endorsed to contain, the following provisions:

1. General Liability and Automobile Liability Coverages

   a. The Town, its elected and appointed officials, agents, employees and volunteers shall be named as an additional insured as regards negligence by the contractor.

   b. The Contractor's insurance shall be primary as respects the Town, its elected and appointed officials, agents, employees and volunteers. Any insurance or self-insurance maintained by the Town of Smyrna shall be excess and non-contributory of the Contractor's insurance.

2. Workers Compensation and Employers Liability Coverage

The insurer shall agree to waive all rights of subrogation against the Town, its elected and appointed officials, agents, employees and volunteers for losses arising from work performed by the Contractor for the Town of Smyrna.

3. All Coverages

   a. Coverage shall not be canceled, suspended, or voided by either party (the Contractor or the insurer) or reduced in coverage or in limits except after 30 days written notice has been given to the Town of Smyrna. Ten-day written notice of cancellation is acceptable for non-payment of premium. Notifications shall comply with the standard cancellation provisions in the Contractor's policy.

   b. Neither the acceptance of the completed work nor the payment thereof shall release the Contractor from the obligations of the insurance requirements or indemnification agreement.

   c. The insurance companies issuing the policies shall have no recourse against the Town of Smyrna for payment of premiums or for assessments under any form of the policies.

   d. Replacement certificates, policies or endorsements shall be provided to the Town for any such insurance expiring prior to the completion of services.

   e. Any failure of the Contractor to comply with reporting provisions of the policy shall not affect coverage provided to the Town, its elected and appointed officials, agents, employees and volunteers.

D. ACCEPTABILITY OF INSURERS

All required insurance shall be provided by a company or companies licensed to conduct business in the State of Tennessee. Insurance shall be underwritten by insurers with an A.M. Best Company ratings no less than an A.

E. VERIFICATION OF COVERAGE

The Contractor shall furnish the Town with Certificates of Insurance reflecting proof of required coverage. The Certificates for each insurance policy are to be signed by a person authorized by that insurer to bind coverage on its behalf. **The Certificates are to be received and approved by the Town before work commences and upon any contract renewal thereafter.**

Upon failure of the Contractor to furnish, deliver and maintain such insurance as requested, this contract, at the election of the Town, may be suspended, discontinued or terminated. Failure of the Contractor to purchase and/or maintain any required insurance shall not relieve the Contractor from any liability or indemnification under the contract.

The Certificate of Insurance naming the "Town of Smyrna" as **Additional Insured** shall be addressed to the attention of:

Town of Smyrna
Department of Safety & Risk Management
ATTN: Henry Urbina
315 S Lowry St
Smyrna, TN 37167

It can also be submitted electronically to henry.urbina@townofsmyrna.org. The subject line has to indicate the name of the project.

The Town reserves the right to request complete certified copies of all required insurance policies at any time.

F. SUBCONTRACTORS

Contractor shall include all subcontractors as insureds under its policies **OR** shall be responsible for verifying and maintaining the Certificates provided by each subcontractor. Subcontractors shall be subject to all of the requirements stated herein. The Town of Smyrna reserves the right to request copies of subcontractor's Certificates at any time.

G. WORKERS' COMPENSATION INDEMNITY

In the event Contractor is not required to provide or is exempt from providing workers' compensation coverage, the parties hereby agree that Contractor, its owners, agents and employees will have no cause of action against, and will not assert a claim against the Town of Smyrna, its elected and appointed officials, agents, employees and volunteers, under any circumstances. The parties also hereby agree that the Town of Smyrna, its elected and appointed officials, agents, employees and volunteers shall in no circumstance be, or considered as, the employer or statutory employer of Contractor, its owners, agents and employees. The parties further agree that Contractor is a wholly independent contractor and is exclusively responsible for its employees, owners, and agents. Contractor hereby agrees to protect, defend, indemnify and hold the Town of Smyrna, its elected and appointed officials, agents, employees and volunteers harmless from any such assertion or claim that may arise from the performance of this contract.

HOLD HARMLESS AND INDEMNITY REQUIREMENT:

Contractor shall indemnify and hold harmless, to the maximum extent permitted by law, the Town of Smyrna and its officers, agents, employees, volunteers, from and against any and all liability, damages, losses, (whether in contract or in tort, including personal injury, accidental death or property damage, and regardless, of whether the allegations are false, fraudulent or groundless), and costs (including reasonable attorney's fees, litigation, arbitration, mediation, appeal expenses) which in whole or in part are caused by the negligence, recklessness or intentional wrongful misconduct of the Contractor and persons employed by or utilized by the Contractor in Contractor's performance of this Agreement.

The contractor further agrees to protect, defend, and save the Town, its elected and appointed officials, agents, employees and volunteers while working in the scope of their duties as such, harmless from and against all claims, demands, and causes of action of any kind of character, including the cost of their defense, arising in favor of the contractor's employees or third parties on account of bodily or personal injuries, death or damage to

property arising out of services performed or omissions of services or in any way resulting from the acts of omissions of the contractor and/or its agents, employees, subcontractors, representative of the Town under this agreement.

Pursuant to Tennessee Attorney General Opinion 93-01, the Town will not indemnify, defend or hold harmless in any fashion the Contractor from any claims arising from any failure, regardless of any language in any attachment or other document that the Contractor may provide.

APPLICABLE LAW:

Any contract resulting from this ISQ shall be governed by and construed under the laws of the State of Tennessee.

SMYRNA BUSINESS LICENSE

Compensation of more than $100,000 from contracts performed in one county by a contractor described in Tenn. Code Ann. § 67- 4-708(4)(A) will be sourced to that county and the tax from such contracts will be distributed to that county. Compensation of $100,000 or less from contracts performed in one county by such person will be sourced to the county of the person's domicile or location. If the person does not have a domicile or location in Tennessee, such compensation will be earmarked and allocated to the state's general fund.

For purposes of distribution of the municipal business tax provided for in Tenn. Code Ann. § 67-4-705, receipts will be sourced to the municipality in which the person's established physical location, outlet, or other place of business is located. Receipts from sales made by persons operating from an established physical location, outlet, or other place of business in one municipality who extend their operations outside the boundaries of the municipality without establishing a physical location, outlet, or place of business outside the boundaries of the municipality will be sourced to the municipality in which the person's established physical location, outlet, or other place of business is located.

If the person has no established physical location, outlet, or other place of business in the state, then such receipts will not be subject to the municipal business tax. Receipts from all taxable sales of any services or tangible personal property by a provider of video programming services will be sourced to the municipality where the property or service is received by the customer regardless of whether or not the provider has a physical location, outlet, or other place of business in that municipality.

Compensation of more than $100,000 from contracts performed in one municipality by a contractor described in Tenn. Code Ann. § 67- 4-708(4)(A) will be sourced to that municipality and the tax from such contracts will be distributed to that municipality. Compensation of $100,000 or less from contracts performed in one municipality by such person will be sourced to the municipality of the person's domicile or location. If the person does not have a domicile or location in Tennessee, such compensation will not be subject to the municipal business tax. (*from Tennessee Business Tax Guide/ Tenn. Dept. of Revenue 2019; See also, Tennessee Works Tax Act (2023), Public Chapter 377, 2023 Session of the 113th General Assembly*)

SECTION III – PRICE QUOTATION FOR GATEWAY MONUMENTATION

TOTAL LUMP SUM COST $ 81,655.00

NUMBER OF DAYS TO COMPLETE JOB FROM NOTICE TO PROCEED 60



AGREEMENT

This Agreement is made and entered into as of this 26 th day of May, 2026, by and between Icon Custom Masonry Inc., a General Contractor (the "Bidder") and the Town of Smyrna, Tennessee, a Tennessee municipal corporation (the "Town") for the purpose of Gateway Monumentation.

WHEREAS, the Bidder has submitted a quotation for the provision of certain products and/or services to the Town, all in accordance with the terms of the Invitation to Submit Quotations attached hereto and incorporated herein by reference as if set forth at length verbatim as Exhibit A (the "ISQ"), and which Proposal from the Bidder is attached hereto and incorporated herein by reference as if set forth at length verbatim as Exhibit B (the "Quotation"); the ISQ and the Quotation, together with any and all ancillary documents thereto, shall be collectively referred to herein as the "Bid Documents"; and

WHEREAS, the Town now desires to accept the Bidder's quotation, in accordance with the terms set forth in such Bid Documents.

NOW, THEREFORE, in consideration of the mutual covenants contained herein, and for other good and valuable consideration, the receipt and sufficiency of which is hereby acknowledged, the undersigned do hereby agree as follows:

1. Acceptance of Bid Documents. The terms of the Bid Documents, as incorporated herein by reference, are hereby accepted by the parties hereto. The Bidder hereby agrees to provide the goods and/or services contemplated by such Bid Documents in accordance with the terms set forth therein. The Town hereby accepts the Bidder's quotation to provide the goods and/or services contemplated by such Bid Documents in accordance with the terms set forth therein.

2. Entire Agreement. This Agreement, including the exhibits and any other documents referred to herein or therein, which form a part hereof, contains the entire understanding of the parties with respect to its subject matter. There are no restrictions, agreements, promises, warranties, covenants or undertakings other than those expressly set forth herein or therein. This Agreement supersedes all prior written or oral agreements and understandings between the parties with respect to its subject matter and may not be altered, modified or amended, in whole or in part, except by the express written authorization and consent of the parties hereto.

3. Severability. This agreement constitutes the product of negotiations of the parties hereto and any enforcement of hereof will be interpreted in a neutral manner and not more strongly against any party based upon the source of the draftsmanship of this Agreement. If any provision of this Agreement shall be held invalid or unenforceable by a court of competent jurisdiction, the remaining provisions hereof shall continue to be fully effective.

4. Limitation of Liability. The Town of Smyrna shall not be liable for any loss, claim, expense or damage caused by, contributed to or arising out of the acts or omission of Bidder or third parties, whether negligent or otherwise.

5. Warranties. The Bidder warrants to the Town that all materials and equipment furnished under this Contract will be new unless otherwise specified, and that all work will be of good quality, free from faults and defects, suitable for the purpose for which the materials and equipment are furnished, and in conformance with the Agreement. If it does not perform as warranted, Bidder shall use all commercially reasonable efforts to correct the product(s) so that it operates in all material respects in conformity with the written representations of Bidder. If Bidder cannot correct the product(s) within a reasonable period of time, Bidder shall refund the purchase price of the product(s). All work not conforming to these requirements, including substitutions not properly approved and authorized, may be considered defective.

6. Software Deadline, Testing and Acceptance: If applicable to the Agreement, software provided by Bidder shall be installed for the purposes of testing, as stated herein below, no later than one hundred twenty (120) days from the effective date of this Agreement unless the parties, in writing, set a different specific date. In Addition, software provided by Bidder to The Town is subject to inspection and testing to verify that the software conforms to its written specifications and to ensure it meets The Town's needs. The Town shall have seven (7) business days after the software is installed to perform testing of the software using The Town's data. The Town shall provide Bidder with written notice of acceptance or rejection of the software five (5) business days or less after the end of the testing period. If the Town does not provide timely written notice of acceptance or rejection to Bidder, the software shall be deemed to be accepted by The Town. If the software is rejected, The Town may, at its sole discretion, either (1) return the software and receive a refund of all fees paid with respect thereto, or (2) allow Bidder to repair or replace the software, without charge, in a timely manner. In the event The Town elects to allow the Bidder to repair or replace the software, The Town shall have an additional (7) business days in which to accept or reject the software as laid out hereinabove.

7. Use of The Town's Logo or Name: Bidder shall not use The Town's name or any logo in marketing or publicity materials or for marketing or publicity purposes without the prior written authorization from The Town. Bidder shall not issue, publish, or divulge any materials developed or used in the performance of this Agreement or make any statement to the media relating to this Agreement without the prior written consent of The Town.

8. Indemnification. The parties hereto agree that Bidder shall indemnify The Town for any and all claims of negligence, tortious conduct or otherwise unlawful acts committed by Bidder in the performance of their obligations under the terms of this agreement, including any and all attachments or exhibits thereto and Bidder agrees to pay any and all costs associated with the enforcement of the terms of this indemnity agreement by The Town, including but not limited to, court costs, civil judgments, assessments or any other reasonable fees associated therewith. This clause shall survive the expiration or termination of this Agreement and shall remain in full force and effect until the expiration of any applicable statute of limitation. In addition, Article II, Section 29 of the Tennessee Constitution prohibits municipalities from lending their credit to private of public entities and, therefore, prohibits an agreement by The Town to indemnify a third party or agree to a limitation of liability provision.

9. Non-Appropriation: Bidder acknowledges that The Town is a governmental entity, and the validity of this Agreement is based upon the availability of public funding under its authority. In the event The Town fails to appropriate funds or make monies available for any fiscal year covered by the term of this Agreement for services to be provided, this Agreement shall be terminated on the last day of the fiscal year for which funds were appropriated or monies made available for such purposes without liability to The Town, and such termination shall not be a breach of the Agreement, and any unused payment made to Bidder shall be returned to The Town.

10. Tax Exemption: As a tax-exempt entity, The Town shall not be responsible for sales or use taxes incurred for products or services. The Town shall supply Bidder with its Sales and Use Tax Exemption Certificate upon Bidder's request. Bidder shall bear the burden of providing its suppliers with a copy of The Town's tax exemption certificate and Bidder shall assume all liability for such taxes, if any, that should be incurred.

11. Attorney Fees. The parties hereto agree that The Town shall be in no event liable for any attorney's fees which Bidder may incur due to breach of this Agreement by either party; and further, The Town shall not acquiesce to any term in any document that indicates or infers The Town may or shall be responsible for the Attorney's fees of another party or the Bidder's attorney fees.

12. Boycott of Israel. The Bidder certifies that it is not currently engaged in, and covenants that it will not, for the duration of the Contract, engage in a Boycott of Israel, as that term is defined in Tenn. Code Ann. § 12-4-119.

13. Failure to perform. The parties agree, in the event Bidder fails to perform any obligation, other than with regards to the date of delivery, set out in this Agreement, the Town shall be reimbursed by Bidder for any and all expenses associated with having to obtain a new provider to finish out the contracted term, including, but in no way limited to, any charges/fees, which are above and beyond the amount the Town would have paid to Bidder to complete the same task; provided, however, that if the failure, by its nature, is one that can be cured, the Bidder shall have fifteen (15) business days after receipt of written notice from the Town to cure said failure to perform. The parties hereby agree, unless a specific date of delivery is provided in this Agreement or other bid documents, all deliveries shall be made to the Town no later than ninety (90) days from the date of order. The parties further agree that if Bidder, in good faith, is not able to meet this ninety (90) day deadline of delivery due to forces beyond his, her or its control, that were unforeseeable at the time of signing this contract, then this entire Agreement shall be voidable at the sole discretion of the Town. Should the Town elect to void this Agreement due to Bidder's good faith inability, due to forces beyond his, her or its control, and which were unforeseeable at the time of signing this Agreement to meet the delivery deadline, then neither party shall be deemed to have breached this Agreement, and Bidder shall return all monies, within seven (7) business days, paid by the Town for the products/items that could not be delivered in the allotted time.

14. Unilateral Modification of Agreement Not Permitted: Bidder may make unilateral changes to its Privacy Policy, provided any such changes are subject to the provisions of this Agreement but shall not materially alter the use of the service or reduce the level of protection provided to the Town at the time of the execution of this Agreement. Except as provided in the preceding sentence, notwithstanding anything in this Agreement to the contrary, any change to this Agreement made by Bidder that is not in writing and that is not properly executed by the signatures of authorized representatives of the parties hereto, including attestation by The Town's Clerk and approved as to form by the Town Attorney are subject to the terms and conditions of this Agreement.

15. Changes to Terms: Except as provided in Paragraph No. 13 above pertaining to Bidder's Privacy Policy, Bidder shall provide The Town written notice, sent in care of Town Attorney's Office, Smyrna, Tennessee, 315 South Lowry Street, Tennessee 37167, of any proposed change to this Agreement at least ninety (90) days prior to being effective to The Town. The Town shall have thirty (30) days after receiving the written notice to terminate this Agreement, and such cancellation shall not be a breach of this Agreement. Bidder will refund to The Town any payment made by The Town to Bidder equal to the difference between the number of months the payment was intended for and the number of months remaining on this Agreement that the fee was intended to cover.

16. Price Assurance: Unless specifically stated in this Agreement or other bid documents, the bid price shall be valid for the full term of this Agreement. If the Bidder, specifically states that he, she or it cannot honor the bid price for the full term of this Agreement; then this Agreement is voidable at the sole discretion of the Town, if at any time during the full term of this Agreement, Bidder requests

to raise the bid price. If the Town elects to void this Agreement, at its sole discretion, it shall not be deemed to be a breach of the contract by either party.

17. Confidentiality. The Town, as a Tennessee Municipal Corporation is subject to the Tennessee Open Records Act, set out in T.C.A. §10-7-503 et seq; therefore, this Agreement and all documents or materials, in any format, including, but not limited to paper, electronic or virtual, that are public records pursuant to law, are not confidential and are subject to disclosure. The Town will respond to all proper Open Records Requests in the time allowed by law, without any requirement to disclose such request to Bidder or provide Bidder with notice or the time to obtain a protective order. The Town does not have the burden of establishing that information is not confidential information or that its release is authorized to release the records. This section 16 serves to meet such burden and authorization of disclosure.

18. Mediation. The Town may, at its option, require the attempted resolution of any dispute arising under this Agreement by mediation prior to the filing of any lawsuit or other claim. Should any dispute arise, Bidder shall provide the Town notice of any intent to file suit by certified mail. The Town shall notify the Bidder of its intent to exercise its right to mediation within thirty (30) days of receiving such notice. If the Town does not exercise its right to mediation, Bidder may file suit. Any mediator selected under this clause shall be agreed upon by the parties and the costs of such mediation shall be divided and paid equally between the parties.

19. No Presumption Against Drafter: The parties are both business entities having substantial experience with the subject matter of this Agreement, and each has fully participated in the negotiation and drafting of this Agreement. Accordingly, this Agreement shall be construed without regard to the rule that ambiguities in a document are to be construed against the draftsman. No inferences shall be drawn from the fact that the final, duly executed Agreement differs in any respect from any previous draft hereof.

20. Governing Law. This Agreement shall be deemed to have been executed and delivered within the State of Tennessee, and the rights and obligations of the parties shall be construed and enforced in accordance with, and governed by, the laws of the State of Tennessee. The parties agree that all obligations of the parties are performable in Smyrna, Tennessee.

21. Choice of Forum and Venue. The parties' choice of forum and venue shall be exclusively in the courts of Rutherford County, Tennessee or the United States District Court, for the Middle District of Tennessee. The parties hereby waive their right to a jury trial. Any provision of the Agreement held to violate a law or regulation shall be deemed void, and all remaining provisions shall continue in force.

IN WITNESS WHEREOF, the undersigned have executed this Agreement as of the date set forth above.

TOWN OF SMYRNA, TENNESSEE

By: _____
Name: Mary Esther Reed
Title: Mayor

ATTEST:

_____
Amber Hobbs, Town Clerk

BIDDER:

By: _____
Title: President

ATTEST:

_____

TOWN OF SMYRNA

TITLE VI COMPLIANCE SURVEY

The Town of Smyrna intends to fully comply with the Tennessee Department of Transportation's policy regarding TITLE VI of the CIVIL RIGHTS ACT of 1964; 49 CFT, PART 21; related statutes and regulations to the end that no person shall be excluded from participation in or be denied the benefits of, or be subjected to discrimination under any program or activity receiving federal financial assistance from the U.S. Department of Transportation on the grounds of race, color, gender, age, disability or national origin.

Please complete the following information:

NAME OF COMPANY: Icon Custom Masonry Inc.

NAME OF OWNER/CONTRACTOR: James McCarthy

ADDRESS OF OWNER/CONTRACTOR: 10942 Barberville Rd Fort Mill SC 29707

COUNTY: Lancaster

TYPE OF SERVICES PROVIDED: Construction of Gateway Signage

CONTRACT: Gateway Signage

OWNER/CONTRACTOR (Race/Gender)		**EMPLOYEES** (Number in each category)	
White Male		White Males	6
White Female		White Females	2
African-American Male		African-American Males	
African-American Female		African-American Females	
Hispanic Male	✓	Hispanic Males	2
Hispanic Female		Hispanic Females	
Native American Male		Native American Males	
Native American Female		Native American Females	
Asian-American Male		Asian-American Males	
Asian-American Female		Asian-American Females	
Other _____Male		Other _____ Males	
Other _____Females		Other _____ Females	

TOWN OF SMYRNA CONSTRUCTION CONTRACT

CERTIFICATE OF NON-DISCRIMINATION

As Bidder, Contractor, or Subcontractor on Town of Smyrna Construction or Other Project,

Icon Custom Masonry Inc.

1. the undersigned states that he does not discriminate against any subcontractor, employee or applicant for employment on the grounds of race, color, religion, sex, national origin, age, disability or any other lawfully protected classification, if awarded a contract for this project, agrees in performance of work:

2. not to discriminate against any subcontractor, employee, or applicant for employment on the grounds of race, color, religion, sex, national origin, age, or disability:

3. to maintain payrolls of laborers and mechanics employed on this contract until 90 days after final release and final payment by the Town;

4. require a similar certificate to be executed by each subcontractor at the time a subcontractor is executed under the contract with the requirement that such subcontractor agrees to require a similar certificate of requirement on any lower tier of subcontractors.

Contractor's Name James McCarthy Date 5/26/2026

Signature _____ Title President

Printed or typed name and title

AFFIDAVIT

STATE OF TENNESSEE DRUG-FREE WORKPLACE AFFIDAVIT

COUNTY OF Lancaster SC OF PRIME BIDDER

NOW COMES AFFIANT, who being duly sworn, deposes and says:

1. He/She is the principal officer for Icon Custom Masonry Inc;
2. That the bidding entity has submitted a bid to the Town of Smyrna for the construction of Gateway Monumentation;
3. That the bidding entity employs no less than five (5) employees;
4. That Affiant certifies that the bidding entity has in effect, at the time of submission of its bid to perform the construction referred to above, a drug-free workplace program that complies with §50-9-113, *Tennessee Code Annotated.*
5. That this affidavit is made on personal knowledge.

Further Affiant saith not.

AFFIANT

SUBSCRIBED AND SWORN TO before me this 26 day of May, 2026.

MICHAEL V SWEENEY
NOTARY PUBLIC
UNION COUNTY
NORTH CAROLINA
MY COMMISSION EXPIRES MAY 17, 2028

NOTARY PUBLIC

My Commission expires: May 17 2028

50-9-113. State and local government construction contracts.

(a) Each employer with no less than five (5) employees receiving pay who contracts with the state or any local government to provide construction services or who is awarded a contract to provide construction services or who provides construction services to the state or local government shall submit an affidavit stating that such employer has a drug-free workplace program that complies with this chapter, in effect at the time of such submission of a bid at least to the extent required of governmental entities. Any private employer that certifies compliance with the drug-free workplace program, only to the extent required by this section, shall not receive any reduction in workers' compensation premiums and shall not be entitled to any other benefit provided by compliance with the drug-free workplace program set forth in this chapter. Nothing in this section shall be construed to reduce or diminish the rights or privileges of any private employer who has a drug-free workplace program that fully complies with this chapter. For purposes of compliance with this section, any private employer shall obtain a certificate of compliance with the applicable portions of the Drug-free Workplace Act from the department of labor and workforce development. No local government or state governmental entity shall enter into any contract or award a contract for construction services with an employer who does not comply with the provisions of this section.

(b) For the purposes of this section, "employer" does not include any utility or unit of local government. "Employer" includes any private company and/or corporation.

(c) If it is determined that an employer subject to the provisions of this section has entered into a contract with a local government or state agency and such employer does not have a drug-free workplace pursuant to this section, such employer shall be prohibited from entering into another contract with any local government or state agency until such employer can prove compliance with the drug-free workplace program pursuant to this section. If the same employer again contracts with any local government or state agency and does not have a drug-free workplace program pursuant to this section, then such employer shall be prohibited from entering into another contract with any local government or state agency for not less than three (3) months from the date such violation was discovered and verified and shall be prohibited from entering into another contract until such employer complies with the drug-free workplace program pursuant to this section. If the same employer for a third time contracts with any local government or state agency and does not have a drug-free workplace program pursuant to this section, then such employer shall be prohibited from entering into another contract with any local government or state agency for not less than one (1) year from the date such violation was discovered and verified and shall be prohibited from entering into another contract until such employer complies with the drug-free workplace program pursuant to this section.

(d) A written affidavit by the principal officer of a covered employer provided to a local government at the time such bid or contract is submitted stating that the employer is in compliance with this section shall absolve the local government of all further responsibility under this section and any liability arising from the employer's compliance or failure of compliance with the provisions of this section.

[Acts 2000, ch.918,§§ 1,2.]

TOWN OF SMYRNA CONSTRUCTION CONTRACT

CERTIFICATE OF NON-ILLEGAL IMMIGRANT USE

As Bidder, Contractor, or Subcontractor on Town of Smyrna Construction Project,

Icon Custom Masonry Inc.

1. the undersigned states that he does not knowingly utilize the services of **illegal immigrants** in the performance of a contract for goods or services entered into with the Town of Smyrna:

2. and will not knowingly utilize the services of any subcontractor who will utilize the services of **illegal immigrants** in the performance of the contract;

3. If any person who contracts to supply goods or services to the Town of Smyrna or who submits a bid to contract to supply goods or services to the state or other state entities, is discovered to have knowingly utilized the services of **illegal immigrants** in the performance of the contract to supply goods or services to the Town of Smyrna, the Town of Smyrna shall declare that person to be prohibited from contracting for or submitting a bid for any contract to supply goods or services to the Town of Smyrna for a period of one (1) year from the date of discovery of the usage of **illegal** immigrant services in the performance of a contract to supply goods or services to the Town of Smyrna

Contractor's Name James McCarthy Date 5/26/2026

Signature James W McCarthy Title President

Printed or typed name and title

TOWN OF SMYRNA CONSTRUCTION CONTRACT

CERTIFICATE OF NON-COLLUSION

As Bidder, Contractor, or Subcontractor on Town of Smyrna Construction or Other Project:

Icon Custom Masonry Inc.

the undersigned hereby declares that no person or party other than the undersigned has any interest whatever in the submitted bid proposal, that it is without any connection or collusion with any person or persons making or having made any proposal for the same work and without any previous understanding with such person or persons as to relative prices, obviating competition, and that it is made in good faith.

Contractor's Name James McCarthy Date 5/26/2026

Signature _____ Title President

Printed or typed name and title

SECTION IV - SPECIFICATION COMPLIANCE

Unless otherwise noted, all quotations for the installation of Gateway Monumentation shall be in complete accordance with the specifications detailed herein.

Bidders shall note in the space provided below any exceptions or deviations in any way from the specifications of any section of this ISQ. Bidders should provide complete detail of exceptions or deviations.

Proposal Exceptions

Section	Brief Description
Monument Section 3	Wall will be 5000psi Rebar Reinforced Precast Concrete
	Sealed by a Structural Engineer Licensed in Tennessee
	This will replace the CMU if accepted by Town Engineer
Monument Section 3	Footing will be cast at ICON Manufacturing facillity using
	5000psi Rebar Reinforced Precast Concrete
	The Concrete, Rebar Placement will be inspected and
	Sealed by a Structural Engineer Licensed in Tennessee
	If accepted by Town Engineer
	ICON can install both monuments in 2 Days

By signature below, vendor acknowledges any quotation to be in full compliance with all aspects of each section of the ISQ not noted above.

Icon Custom Masonry Inc.
COMPANY

704 400 5715
TELEPHONE NUMBER

James McCarthy
REPRESENTATIVE NAME

President
REPRESENTATIVE TITLE

SIGNATURE

jmccarthy@iconmasonry.com
E-MAIL ADDRESS

Lowry Street (SR-1) Southbound from LaVergne



Lowry Street (SR-1) Northbound from Murfreesboro



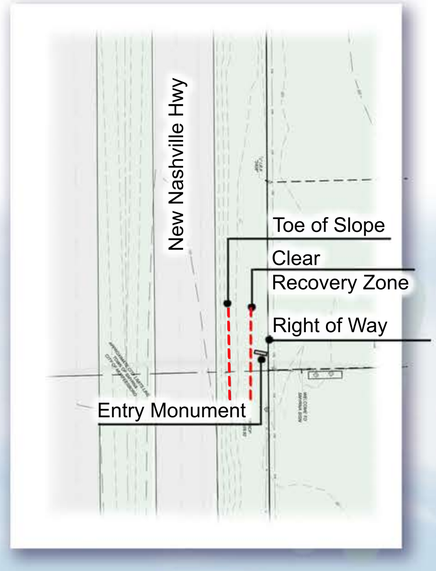

SOUTH

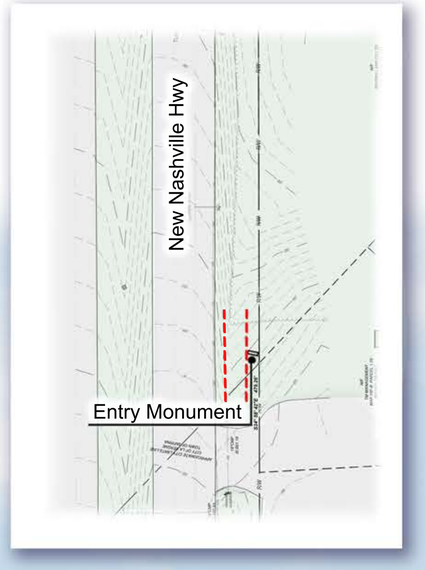

NORTH

CESO

This exhibit is conceptual in nature and may change at owner's discretion in order to meet jurisdictional codes, final site engineering requirements and budget based on pricing for the final plan.

TOWN of SMYRNA

CONCEPTUAL GATEWAY MONUMENT A

06.12.2023

Sign Details Plan Sheet

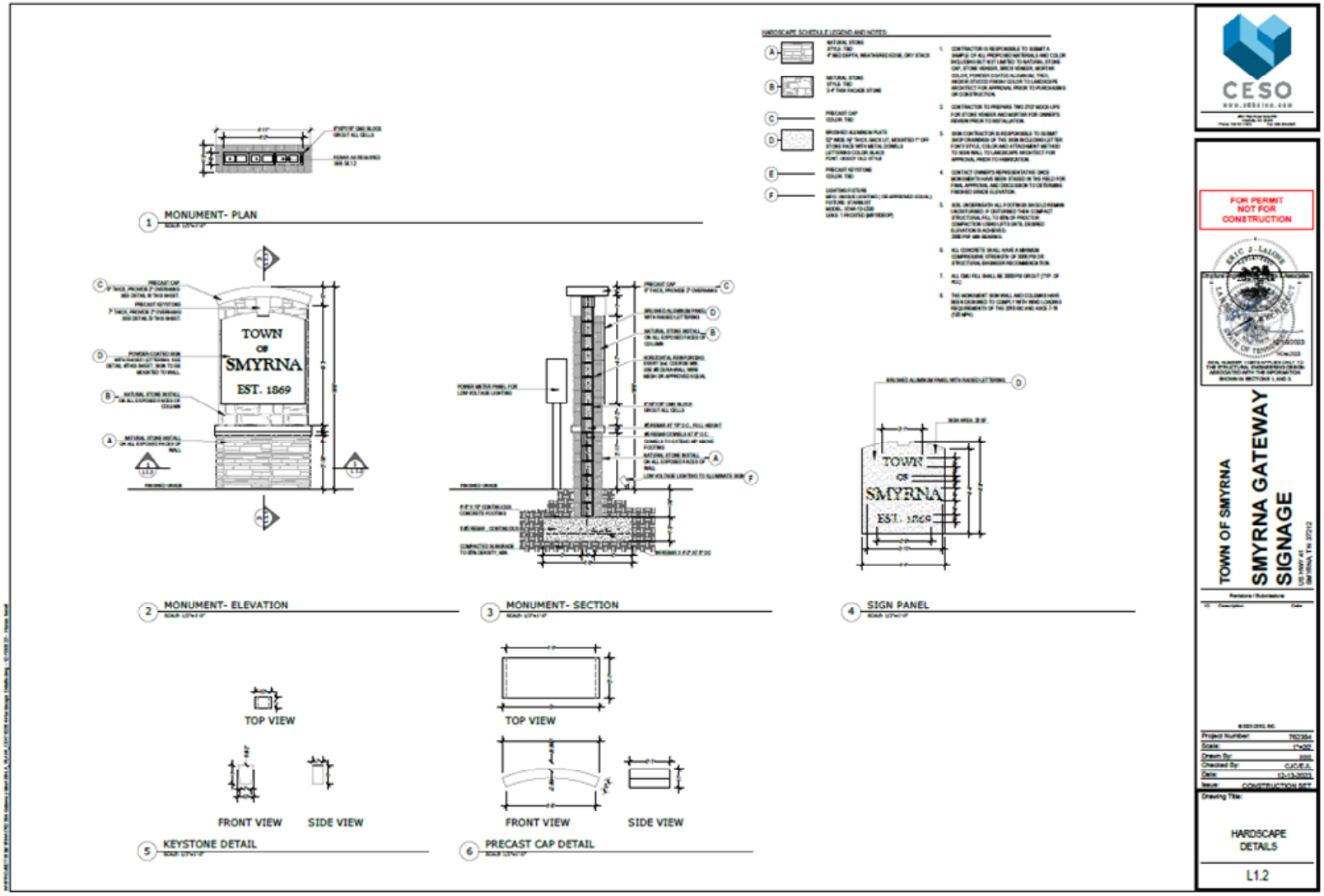

PRECAST CAP AND KEYSTONE
COLOR OPTIONS



SW 7000
Ibis White

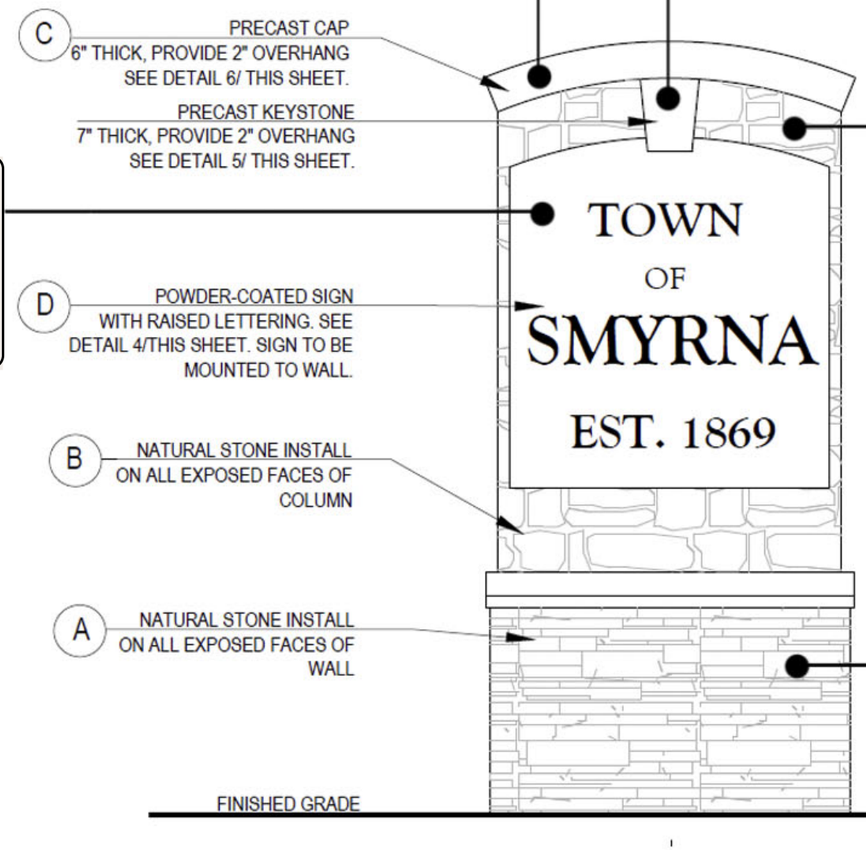







CESO

This exhibit is conceptual in nature and may change at owner's discretion in order to meet jurisdictional codes, final site engineering requirements and budget based on pricing for the final plan.

TOWN of SMYRNA

MATERIALS EXHIBIT

11.21.2023

Example of Aluminum with Raised Black Letters





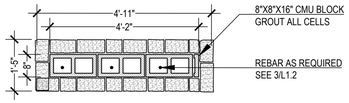

1 MONUMENT- PLAN

SCALE: 1/2"=1'-0"

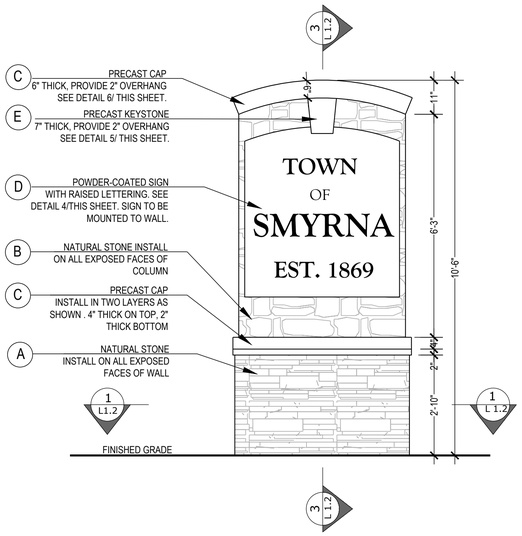

2 MONUMENT- ELEVATION

SCALE: 1/2"=1'-0"

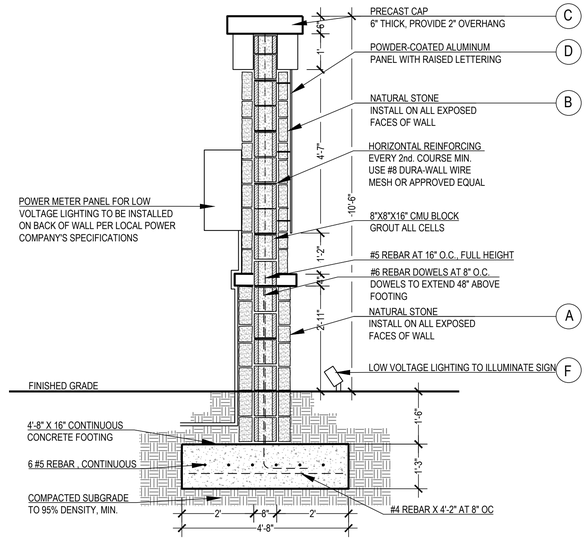

3 MONUMENT- SECTION

SCALE: 1/2"=1'-0"

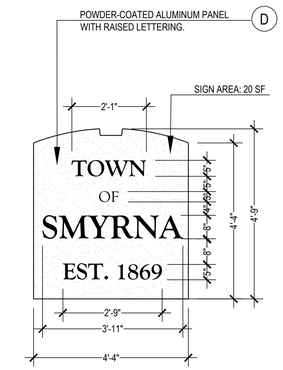

4 SIGN PANEL

SCALE: 1/2"=1'-0"

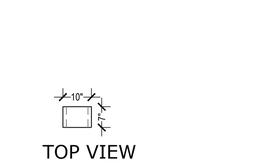

5 KEYSTONE DETAIL

SCALE: 1/2"=1'-0"

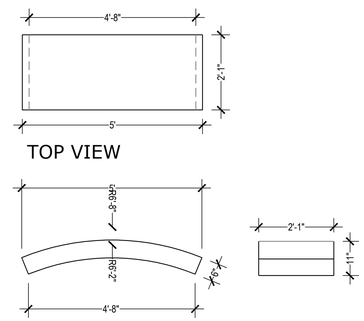

6 PRECAST CAP DETAIL

SCALE: 1/2"=1'-0"





HARDSCAPE SCHEDULE LEGEND AND NOTES:

A — NATURAL STONE
STYLE: TENNESSEE FIELDSTONE (SEE IMAGE FOR COLOR REFERENCE)
4" BED DEPTH, WEATHERED EDGE, DRY STACK

B — NATURAL STONE
STYLE: TENNESSEE FIELDSTONE (SEE IMAGE FOR COLOR REFERENCE)
2-4" THIN FACADE STONE

C — PRECAST CAP
COLOR: SILVER BUFF LIMESTONE

D — POWDER-COATED ALUMINUM PANEL, MOUNTED
1" OFF STONE FACE WITH METAL DOWELS
COLOR: TRAFFIC WHITE (RAL 9016)
LETTERING COLOR: TRAFFIC BLACK (RAL 9017)
FONT: GOUDY OLD STYLE

E — PRECAST KEYSTONE
COLOR: GREY

F — LIGHTING FIXTURE
MFG: UNIQUE LIGHTING (OR APPROVED EQUAL)
FIXTURE: STARBUST
MODEL: STAR-12-L530
LENS: 1 FROSTED (MR16DEOP)

1. CONTRACTOR IS RESPONSIBLE TO SUBMIT A SAMPLE OF ALL PROPOSED MATERIALS AND COLOR INCLUDING BUT NOT LIMITED TO NATURAL STONE CAP, STONE VENEER, MORTAR COLOR, POWDER COATED ALUMINUM AND/OR STUCCO FINISH/COLOR TO LANDSCAPE ARCHITECT FOR APPROVAL PRIOR TO PURCHASING OR CONSTRUCTION.
3. CONTRACTOR TO PREPARE ONE 3'X5' MOCK-UP FOR STONE VENEER AND MORTAR.
4. SIGN CONTRACTOR IS RESPONSIBLE TO SUBMIT SHOP DRAWINGS OF THE SIGN INCLUDING LETTER FONT/ STYLE, COLOR AND ATTACHMENT METHOD TO SIGN WALL TO LANDSCAPE ARCHITECT FOR APPROVAL PRIOR TO FABRICATION.
5. CONTACT OWNER'S REPRESENTATIVE ONCE MONUMENTS HAVE BEEN STAKED IN THE FIELD FOR FINAL APPROVAL AND DISCUSSION TO DETERMINE FINISHED GRADE ELEVATION.
6. SOIL UNDERNEATH ALL FOOTINGS SHOULD REMAIN UNDISTURBED. IF DISTURBED THEN COMPACT STRUCTURAL FILL TO 95% OF PROCTOR COMPACTION USING LIFTS UNTIL DESIRED ELEVATION IS ACHIEVED. 2000 PSF MIN BEARING.
7. ALL CONCRETE SHALL HAVE A MINIMUM COMPRESSIVE STRENGTH OF 3000 PSI OR STRUCTURAL ENGINEER RECOMMENDATION.
8. ALL CMU FILL SHALL BE 3000 PSI GROUT (TYP. OF ALL)
9. THE MONUMENT SIGN WALL AND COLUMNS HAVE BEEN DESIGNED TO COMPLY WITH WIND LOADING REQUIREMENTS OF THE 2018 IBC AND ASCE 7-16 (105 MPH)

CESO
WWW.CESOINC.COM
4601 Park Road Suite 650
Charlotte, NC 28209
Phone: 704.521.7979 Fax: 888.208.4826

ERIC J. LALONE — REGISTERED — AGRICULTURE — LANDSCAPE ARCHITECT — TENNESSEE
10-17-2025

Structural Engineer: Britt, Peters & Associates
WILLIAM B UNDERWOOD — REGISTERED ENGINEER — AGRICULTURE — COMMERCE — No. 119879 — STATE OF TENNESSEE
17Oct2025
SEAL NUMBER 119879 APPLIES ONLY TO THE STRUCTURAL ENGINEERING DESIGN ASSOCIATED WITH THE INFORMATION SHOWN IN SECTIONS 1, AND 3.

TOWN OF SMYRNA

SMYRNA GATEWAY SIGNAGE

US HWY 41
SMYRNA, TN 37212

Revisions / Submissions

ID	Description	Date

© 2023 CESO, INC.

Project Number:	762384
Scale:	1"=20'
Drawn By:	HHI
Checked By:	CJC/EJL
Date:	10-17-2025
Issue:	CONSTRUCTION SET

Drawing Title:

HARDSCAPE DETAILS

L1.2

C:\DCIACCDocs\CESO\Smyrna-Gateway Monuments\Project Files_CESO\06-LA_PLAN_CD\762384-Hardscape Details.dwg - 10/17/2025 - Gracie Gilbert

Town of Smyrna
Town Council Meeting
Agenda Summary

Agenda Item Number 5.f.
Department: Public Works
Date: July 14, 2026

Subject:
Approval of the terms of, and authorization for the Mayor to execute, a time extension request for Lowry Street Phase II (PIN 129837).

Fiscal Impact:
No fiscal impact

Contract Type:
Contract Change Order /Amendment

Contract Term (if applicable):
Extension to April 30, 2028.

Background:
Lowry Street Sidewalk Improvements Phase II includes sidewalks from Harts Branch Bridge to Jackson Street on both sides of Lowry Street. Currently, we are waiting on Design Plan approval and NTP to ROW Phase. This extension is required by TDOT.

Summary:
This project commenced in 2020 with NTP to NEPA Phase. NTP to Design was provided in 2022. The primary delay for the project was the water main replacement along the east side of the corridor. We also had a long period of time waiting on TDOT to approve our access management/drainage plan. Additionally, the environmental NEPA update and the lighting plans were added at the end of last year, which took some time to process.

Recommended Council Action:
Staff recommends Town Council approve the Mayor to sign the extension.

Attachments:
1. PIN 129837 - Time Extension

STATE OF TENNESSEE
DEPARTMENT OF TRANSPORTATION
LOCAL PROGRAMS & COMMUNITY INVESTMENTS DIVISION
12TH FLOOR, WILLIAM R. SNODGRASS TOWER
312 ROSA L. PARKS AVENUE
NASHVILLE, TN 37243
(615) 741-2208

WILL REID
COMMISSIONER

BILL LEE
GOVERNOR

June 1, 2026

The Honorable Mary Esther Reed
Mayor, Town of Smyrna
315 South Lowry Street
Smyrna, TN 37167

Re: SR-1/US-41 (Lowry Street), from Jackson Street to Bridge over Harts Branch
Smyrna, Rutherford County
PIN: 129837.00
Federal Project Number: STP-M-NH-1(418)
State Project Number: 75LPLM-F3-096
Agreement Number: 190347

Dear Mayor Reed:

Thank you for your letter dated today requesting an extension. Based on the justification provided, we concur that an amendment is justified.

I am attaching an amendment to the original contract to this letter. The amendment extends the expiration date of the contract. Please review the amendment and advise me if it requires further explanation. If you find the amendment satisfactory, please execute it in accordance with all rules, regulations, and laws. Adobe Sign will then forward the document for the signature of the attorney for your agency. Once the amendment is fully executed Adobe Sign will email you a link to the fully executed amendment.

If you have any questions or need any additional information, please contact Robert Harris at 629-253-5880 or robert.harris@tn.gov.

Sincerely,

Mike Gilbert
Manager, Local Programs & Community Investments Division

Attachment

Amendment Number: 3

Agreement Number: 190347

Project Identification Number: 129837.00

Federal Project Number: STP-M-NH-1(418)

State Project Number: 75LPLM-F3-096

THIS AGREEMENT AMENDMENT is made and entered into this _____ day of _____, 20___ by and between the STATE OF TENNESSEE DEPARTMENT OF TRANSPORTATION, an agency of the State of Tennessee (hereinafter called the "Department") and the TOWN OF SMYRNA (hereinafter called the "Agency"), for the purpose of providing an understanding among the parties of their respective obligations related to the management of the project described as:

SR-1/US-41 (Lowry Street), from Jackson Street to Bridge over Harts Branch

1. The language of Agreement # 190347 A2 dated July 12, 2024 Section B.2 a) is hereby deleted in its entirety.

2. The following is added as B.2 a) .

B.2 a) The Agency agrees to complete the herein assigned phases of the Project on or before **April 30, 2028**. If the Agency does not complete the herein described phases of the Project within this time period, this Agreement will expire on the last day of scheduled completion as provided in this paragraph unless an extension of the time period is requested by the Agency and granted in writing by the Department prior to the expiration of the Agreement. An extension of the term of this Agreement will be effected through an amendment to the Agreement. Expiration of this Agreement will be considered termination of the Project. The cost of any work performed after the expiration date of the Agreement will not be reimbursed by the Department.

All provisions of the original contract not expressly amended hereby shall remain in full force and effect.

IN WITNESS WHEREOF, the parties have caused this instrument to be executed by their respective authorized officials on the date first above written.

TOWN OF SMYRNA

By: _____ _____

Mary Esther Reed **Date**
Mayor

STATE OF TENNESSEE
DEPARTMENT OF TRANSPORTATION

By: _____ _____

Will Reid **Date**
Commissioner

APPROVED AS TO
FORM AND LEGALITY

By: _____ _____

Kyle Evans **Date**
Attorney

APPROVED AS TO
FORM AND LEGALITY

By: _____ _____

Leslie South **Date**
General Counsel

By: _____ _____

Steve Allen **Date**
Director, Local Programs
& Community Investments
Division

Town of Smyrna
Town Council Meeting
Agenda Summary

Agenda Item Number 5.g.
Department: Public Works
Date: July 14, 2026

Subject:
Approval of the terms of, and authorization for the Mayor to execute, a contract extension for Roadway Patching with Sessions Paving Company.

Fiscal Impact:
This contract is paid out of State Street Aid and has a budget of $200,000 for larger road repairs.

Contract Type:
Contract Renewal

Contract Term (if applicable):
The original contract was approved June 11, 2024 and is a 2-year contract. This is a one-year contract extension from July 1, 2026 to June 30, 2027.

Background:
This contract has been used to make larger road failure repairs along Rock Springs Road, Belaire Drive, and Bane Drive most recently.

Summary:
This work includes cutting and removing sections of asphalt, digging out base stone and subgrade material, installing new, larger stone, and building the road base back while compacting the new stone, then paving over the section of asphalt that was removed. Contracting for these major repairs helps the Public Works Department complete larger, time-consuming road repairs.

Recommended Council Action:
Staff recommends the Town Council approve the Mayor to sign the contract extension.

Attachments:
1. Patching Extension Agreement
2. Roadway Patching Repairs -Sessions Paving Co 2024
3. Final Contract Sessions Paving Co.- Roadway Patching

EXTENSION AGREEMENT

This Agreement is made and entered into on this ____ day of _____, 20___, by and between **Sessions Paving Company** (the "Bidder") and the Town of Smyrna, Tennessee, a Tennessee municipal corporation (the "Town") for the purpose of Roadway Patching.

WHEREAS, pursuant to the terms of an Agreement, dated **June 11, 2024** by and between the Bidder and the Town, the Bidder agreed to provide certain products and/or services to the Town, all in accordance with the terms of the Bid Documents (as defined in the Original Agreement);

WHEREAS, pursuant to the terms of the Bid Documents, upon mutual agreement, the Original Agreement may be renewed for up to a maximum of two additional one-year periods under and upon the same price, terms, and conditions as set forth in the Bid Documents; and

WHEREAS, the parties now desire to renew the Original Agreement for an additional one-year period, in accordance with the terms set forth in the Bid Documents.

NOW, THEREFORE, in consideration of the mutual covenants contained herein, and for other good and valuable consideration, the receipt and sufficiency of which is hereby acknowledged, the parties hereto hereby agree to renew and extend the Original Agreement for an additional two-year period, beginning **July 1, 2026** and ending **June 30, 2027** subject to the following terms and conditions:

1. Extension of Original Agreement & Incorporation of Supporting/Related Documents: All provisions of the Original Agreement which do not conflict with a provision contained in this extension agreement, the quotation/bid for the provision of products or services previously submitted by bidder, and all terms of the invitation to submit quotations are incorporated herein by reference as if set forth at length verbatim. The original agreement shall remain in full force and effect for an additional period of one (1) year commencing on the date of expiration fixed for the original agreement.

2. Severability: This agreement constitutes the product of negotiations of the parties hereto and any enforcement hereof will be interpreted in a neutral manner and not more strongly against any party based upon the source of the draftsmanship of this Agreement. If any provision of this Agreement shall be held invalid or unenforceable by a court of competent jurisdiction, the remaining provisions hereof shall continue to be fully effective.

3. Limitation of Liability: The Town of Smyrna shall not be liable for any loss, claim, expense or damage caused by, contributed to by or arising out of the acts or omission of Bidder or third parties, whether negligent or otherwise.

4. Warranties: The Bidder warrants to the Town that all materials and equipment furnished under this Extension Agreement will be new, unless otherwise specified, and that all work will be of good quality, free from faults and defects, suitable for the purpose for which the materials and equipment are furnished, and in conformance with the Agreement. If it does not perform as warranted, Bidder shall use all commercially reasonable efforts to correct the product(s) so that it operates in all material respects in conformity with the written representations of Bidder. If Bidder cannot correct the product(s) within a reasonable period of time, Bidder shall refund the purchase price of the product(s). All work not conforming to these requirements, including substitutions not properly approved and authorized, may be considered defective.

5. Software Deadline, Testing and Acceptance: If applicable to the Original Agreement, software provided by Bidder during any extension covered under this Extension Agreement, shall be installed for the purposes of testing, as stated herein below, no later than one hundred twenty (120) days from the effective date of this Extension Agreement unless the parties, in writing, set a different specific date. In Addition, software provided by Bidder to the Town is subject to inspection and testing to verify that the software conforms to its written specifications and to ensure it meets the Town's needs. The Town shall have seven (7) business days after the software is installed to perform testing of the software using the Town's data. The Town shall provide Bidder with written notice of acceptance or rejection of the software five (5) business days or less after the end of the testing period. If the Town does not provide timely written notice of acceptance or rejection to Bidder, the software shall be deemed to be accepted by the Town. If the software is rejected, the Town may, at its sole discretion, either (1) return the software and receive a refund of all fees paid with respect thereto, or (2) allow Bidder to repair or replace the software, without charge, in a timely manner. In the event the Town elects to allow the Bidder to repair or replace the software, the Town shall have an additional (7) business days in which to accept or reject the software as laid out hereinabove.

6. Use of The Town's Logo or Name: Bidder shall not use the Town's name or any logo in marketing or publicity materials or for marketing or publicity purposes without the prior written authorization from the Town. Bidder shall not issue, publish, or divulge any materials developed or used in the performance of the Original Agreement or this Extension Agreement or make any statement to the media relating to the Original Agreement or this Extension Agreement without the prior written consent of the Town.

7. Indemnification: The parties hereto agree that Bidder shall indemnify the Town for any and all claims of negligence, tortious conduct or otherwise unlawful acts committed by Bidder in the performance of their obligations under the terms of this Extension agreement, including any and all attachments or exhibits thereto and Bidder agrees to pay any and all costs associated with the enforcement of the terms of this indemnity agreement by the Town, including, but not limited to, court costs, civil judgments, assessments or any other reasonable fees associated therewith. This clause shall survive the expiration or termination of this Extension Agreement and shall remain in full force and effect until the expiration of any applicable statute of limitation. In addition, Article II, Section 29 of the Tennessee Constitution prohibits municipalities from lending their credit to private or public entities and, therefore, prohibits an agreement by the Town to indemnify a third party or agree to a limitation of liability provision.

8. Non-Appropriation: Bidder acknowledges that the Town is a governmental entity, and the validity of this Extension Agreement is based upon the availability of public funding under its authority. In the event the Town fails to appropriate funds or make monies available for any fiscal year covered by the term of this Extension Agreement for services to be provided, this Extension Agreement shall be terminated on the last day of the fiscal year for which funds were appropriated or monies made available for such purposes without liability to the Town, and such termination shall not be a breach of the Original Agreement or this Extension Agreement, and any unused payment made to Bidder shall be returned to the Town.

9. Tax Exemption: As a tax-exempt entity, the Town shall not be responsible for sales or use taxes incurred for products or services. The Town shall supply Bidder with its Sales and Use Tax Exemption Certificate upon Bidder's request. Bidder shall bear the burden of providing its suppliers with a copy of the Town's tax exemption certificate and Bidder shall assume all liability for such taxes, if any, that should be incurred.

10. Attorney Fees: The parties hereto agree that the Town shall be in no event liable for any attorney's fees which Bidder may incur due to breach of the Original Agreement or this Extension Agreement by either party; and further, the Town shall not acquiesce to any term in any document that indicates or infers the Town may or shall be responsible for the Attorney's fees of another party or the Bidder's attorney fees.

11. Unilateral Modification of Agreement Not Permitted: Bidder may make unilateral changes to its Privacy Policy, provided any such changes are subject to the provisions of this Extension Agreement, but shall not materially alter the use of the service or reduce the level of protection provided to the Town at the time of the execution of the Original Agreement. Except as provided in the preceding sentence, notwithstanding anything in this Extension Agreement to the contrary, any change to this Extension Agreement made by Bidder that is not in writing and that is not properly executed by the signatures of authorized representatives of the parties hereto, including attestation by the Town's Clerk and approved as to form by the Town Attorney are subject to the terms and conditions of this Extension Agreement.

12. Failure to perform: The parties agree, in the event Bidder fails to perform any obligation, other than with regards to the date of delivery, set out in the Agreement, the Town shall be reimbursed by Bidder for any and all expenses associated with having to obtain a new provider to finish out the contracted term, including, but in no way limited to, any charges/fees, which are above and beyond the amount the Town would have paid to Bidder to complete the same task; provided, however, that if the failure, by its nature, is one that can be cured, the Bidder shall have fifteen (15) business days after receipt of written notice from the Town to cure said failure to perform. The parties hereby agree, unless a specific date of delivery is provided in the Agreement all deliveries shall be made to the Town no later than ninety (90) days from the date of the Agreement. The parties further agree that if Bidder, in good faith, is not able to meet this ninety (90) day deadline of delivery due to forces beyond his, her or its control, that were unforeseeable at the time of signing the Agreement, then the entire Agreement shall be voidable at the sole discretion of the Town. Should the Town elect to void the Agreement due to Bidder's good faith inability, due to forces beyond his, her or its control, and which were unforeseeable at the time of signing the Agreement to meet the delivery deadline, then neither party shall be deemed to have breached the Agreement, and Bidder shall return all monies, within seven (7) business days, paid by the Town for the products/items that could not be delivered in the allotted time. This provision shall take propriety over any Force Majeure Clause contained within the Agreement.

13. Changes to Terms: Except as provided in Paragraph No. 12 above pertaining to Bidder's Privacy Policy, Bidder shall provide the Town written notice, sent in care of Town Attorney's Office, Smyrna, Tennessee, 315 South Lowry Street, Tennessee 37167, of any proposed change to this Extension Agreement at least ninety (90) days prior to being effective to the Town. The Town shall have thirty (30) days after receiving the written notice to terminate this Extension Agreement, and such cancellation shall not be a breach of this Extension Agreement. Bidder will refund to the Town any payment made by the Town to Bidder equal to the difference between the number of months the payment was intended for and the number of months remaining on this Extension Agreement that the fee was intended to cover.

14. Mediation: The Town may, at its option, require the attempted resolution of any dispute arising under this Extension Agreement by mediation prior to the filing of any lawsuit or other claim. Should any dispute arise, Bidder shall provide the Town notice of any intent to file suit by certified mail. The Town shall notify the Bidder of its intent to exercise its right to mediation within thirty (30) days of receiving such notice. If the Town does not exercise its right to mediation, Bidder may file suit. Any mediator selected under this clause shall be agreed upon by the parties and the costs of such mediation shall be divided and paid equally between the parties.

15. Price Assurance: Unless specifically stated in the Agreement, the price shall be valid for the full term of the Agreement. If Bidder, specifically states, in the Agreement that he, she or it cannot honor the price for the full term of the Agreement; the Agreement is voidable at the sole discretion of the Town, if at any time during the full term of the Agreement, Bidder requests to raise the contract price. If the Town elects to void the Agreement, at its sole discretion, it shall not be deemed to be a breach of the contract by either party.

16. Confidentiality: The Town, as a Tennessee Municipal Corporation is subject to the Tennessee Open Records Act, set out in T.C.A. §10-7-503 et seq; therefore, this Extension Agreement and all documents or materials, in any format, including, but not limited to paper, electronic or virtual, that are public records pursuant to law, are not confidential and are subject to disclosure, without regard to any provision contained in this Extension Agreement declaring information confidential. The Town will respond to all proper Open Records Requests in the time allowed by law, without any requirement to disclose such request to Bidder or provide Bidder with notice or the time to obtain a protective order. The Town does not have the burden of establishing that information is not confidential information or that its release is authorized to release the records. This section 16 serves to meet such burden and authorization of disclosure.

17. Boycott of Israel: The Bidder certifies that it is not currently engaged in, and covenants that it will not, for the duration of the Contract, engage in a Boycott of Israel, as that term is defined in Tenn. Code Ann. § 12-4-127.

18. No Presumption Against Drafter: The parties are both business entities having substantial experience with the subject matter of this Extension Agreement, and each has fully participated in the negotiation and drafting of this Extension Agreement. Accordingly, this Extension Agreement shall be construed without regard to the rule that ambiguities in a document are to be construed against the draftsman. No inferences shall be drawn from the fact that the final, duly executed Extension Agreement differs in any respect from any previous draft hereof.

19. Governing Law: This Extension Agreement shall be deemed to have been executed and delivered within the State of Tennessee, and the rights and obligations of the parties shall be construed and enforced in accordance with, and governed by, the laws of the State of Tennessee. The parties agree that all obligations of the parties are performable in Smyrna, Tennessee.

20. Choice of Forum and Venue: The parties' choice of forum and venue shall be exclusively in the courts of Rutherford County, Tennessee or the United States District Court, for the Middle District of Tennessee. The parties hereby waive their right to a jury trial. Any provision of the Extension Agreement held to violate a law or regulation shall be deemed void, and all remaining provisions shall continue in force.

21. Conflicting Provisions: Should a provision within this Extension Agreement conflict with a provision within in the Original Agreement, the provision of this Extension Agreement shall govern.

IN WITNESS WHEREOF, the undersigned have executed this Extension Agreement on the date set forth above.

TOWN OF SMYRNA, TENNESSEE:

By: _____
MARY ESTHER REED, MAYOR

ATTEST:

_____
AMBER HOBBS, TOWN CLERK

BIDDER: Sessions Paving Company

_____

By: Robert A. Hutcheson

Title: President

LEGAL NOTICE
INVITATION TO BIDDERS

The Town of Smyrna will accept bids on the **Roadway Patching Repairs**. The project will consist of the following general items:

Roadway repair patches shall be performed on existing roadways due to roadway cuts for utility installations, pot holes and/or pavement failures. Traffic control, erosion control, materials cost and installation, coordination, insurance, labor and all other required items shall be included within the unit bid cost for square yards of roadway patch repairs. Items of work as described above and as directed by the Town of Smyrna representative will be performed at different locations throughout the Town of Smyrna.

Sealed bids will be accepted until **9:00 AM on February 22, 2024** at which time bids will be publicly opened and read aloud. All bids must be marked in a sealed envelope and mailed or hand delivered to:

Rex S. Gaither
Smyrna Town Hall
Roadway Patching Repairs
315 South Lowry Street
Smyrna, TN 37167

Information for Bidders, Form of Bid, Form of Contract, Plans, Specifications, Forms of Bonds and other contract documents may be examined at the following locations:

Smyrna Public Works Department
Tom Rose, Director
315 South Lowry Street
Smyrna, TN 37167
615-459-9742 Ext. 2163

All Bidders must be licensed Contractors in the State of Tennessee in strict accordance with State regulations. All bidders shall comply with the Tennessee Contractor' License law Section 62-6119 (Bid documents - Required disclosure by bidders) when submitting bids. Please refer to State Licensing Board **https://www.tn.gov/commerce/regboards/contractors.html** for all applicable licensing laws.

Bidders may be required to obtain a Smyrna Business License. Refer to the contract documents for criteria.

All bidders shall adhere to Title VI of the Civil Rights Act enacted in 1964 which states that "No person in the United States shall, on grounds of race, color, or national origin, be excluded

from participation in, be denied the benefits of, or subjected to discrimination under any program or activity receiving federal financial assistance", state of Tennessee funding, and/or funded by the Town of Smyrna. In addition, the Town of Smyrna will not discriminate in the purchase of all goods and services on the basis of race, color, religion, sex, national origin, age, disability or any other lawfully protected classification.

Bids may not be withdrawn for ninety (90) days after the actual date of the opening. The Town of Smyrna reserves the right to reject any or all bids to waive technicalities or informalities or accept any presented which meet or exceed the specifications, and/or which would be in the best interest of the Town and will not necessarily be bound to accept the low bid.

SUBMITTED BY: REX S. GAITHER
ASSISTANT TOWN MANAGER
TO BE RUN: January 30, 2024

GENERAL SCOPE OF WORK

GENERAL INFORMATION

A. The Town of Smyrna desires annual roadway patching repair work for the Street Department.

Smyrna Town Hall location:
315 South Lowry Street
Smyrna, TN 37167

Questions should be directed to the Public Works Superintendent (615) 459-9730 or the Public Works Director (615) 459-9742 ext. 2163.

B. The Town of Smyrna reserves the right to reject any and all bids, to waive technicalities or informalities and to accept any bid deemed to be in the best interest of the Town. No bid may be withdrawn after the scheduled closing time for a period of 90 days.

C. The bidder shall abide by and comply with the true intent of the specifications and not take advantage of any unintentional error or omission, but shall fully address the full intent and meaning of each aspect of the specifications.

D. Freight shall be paid by vendor and should be included in unit price bid.

E. The Town is a tax exempt organization.

F. Mail is delivered after 11:00 a.m. Monday through Friday.

G. The Town reserves the right to bid specific road projects separately from this contract at its discretion.

H. The Town of Smyrna, in accordance with Title VI of the Civil Rights Act of 1964 and Title 49, Code of Federal Regulations, hereby notifies all Bidders that it will affirmatively insure that in any contract entered into pursuant to this advertisement, minority business enterprises will be afforded full opportunity to submit bids in response to this invitation and will not be discriminated against on the grounds of race, color, creed, sex, handicap or national origin in consideration for an award.

I. Bid quotations must be submitted on the Town's quotation page(s). No exceptions.

J. By submission of this bid, each bidder/proposer and each person signing on behalf of any bidder certifies, and in the case of a joint bid each party thereto certifies as to its own organization, under penalty of perjury, that to the best of its knowledge and belief that each bidder is not on the list created pursuant to T.C.A. § 12-12-106 Iran Divestment Act. For reference purposes, the list is currently available online at: here

ROADWAY PATCHING REPAIR WORK REQUIREMENTS

SCOPE: The contractor shall provide all labor, materials and equipment necessary for general construction and repair of roadway within the Town of Smyrna. All work projects shall be constructed under the latest version of the Standard Specifications of the Tennessee Department of Transportation for Road and Bridge Construction and the latest edition of the Town of Smyrna Subdivision Regulations and Standard Drawings along with Technical Specifications of the Public Works Director.

1. Working hours will be from 7:00 a.m. until 5:00 p.m. Monday through Friday. Work on Saturday may be allowed from 9:00 a.m. to 5:00 p.m. with prior approval from the Smyrna Public Works Director. No work will be allowed on Sunday unless it has been classified as an emergency situation.

2. Individual work orders and schedules will be established for each project area and locations.

3. Once a contract has been issued all documents from that point forward will be sent to the attention of the Public Works Director.

4. Unit price bid includes saw cutting of existing pavement, excavation and disposal of materials, stone bedding, bituminous prime coat, asphalt binder mix, bituminous tack coat and asphalt topping mix, cleanup and required compaction on base stone, surge stone, and asphalt, traffic control and reinstallation of traffic markings with thermoplastic markings.

    a. The unit price bids shall also include compacted crushed stone base material to be installed to the top of the excavated roadway patching repair areas to a level matching the existing asphalt (where applicable) as to allow traffic flow across these areas until the contractor has scheduled his paving work. The contractor shall maintain these areas until the paving operations begin at each repair area. At the beginning of paving operations, the crushed stone base material (approximately 4.5 inches) shall be removed to a depth where the bituminous prime coat is to be installed and at the elevation where the installation of the binder mix is to begin. This stone shall be disposed of by the contractor and will not be allowed to be utilized in other repair areas. This work will also include thermoplastic traffic markings replacing any marking damaged by the repairs, erosion control, traffic control with appropriate signage and flagmen in accordance with MUTCD standard, cleanup and any other work incidental to the repairs. The contract bid items are further described as follows:

    b. The Roadway Patching Repairs Bid Item for this project will include methods of neatly saw cutting the area to be excavated/repaired, excavating of the existing pavement, stone, soil, and materials along with disposal by the contractor, compaction of the existing subgrade, surge stone, and/or stone base, installation of 10-inches crushed stone (TDOT Type A Grading D pug mill mix) installed in applicable compacted lifts, bituminous tack coat (TDOT 403) applied to the edges of the existing pavement to create a sealer between the existing pavement and the new pavement, installation of 6-inches of asphalt

binder mix (TDOT 307 B-modified) in two 3-inch compacted lifts, and installation of 1.5 inches of compacted asphalt topping mix (TDOT 411-E). This work will also include thermoplastic traffic markings replacing any marking damaged by the repairs, erosion control, traffic control with appropriate signage and flagmen in accordance with MUTCD standards, cleanup and any other work incidental to the repairs.

5. Unit price bid for all items shall include all water quality, erosion and traffic control measure inclusive of permits to comply with local, state and federal requirements.

6. Measurement and payment of quantities shall be in accordance with the contract bid documents, Section 109 of the current edition of the Tennessee Department of Transportation Standard Specifications for Road and Bridge Construction and the latest edition of the Town of Smyrna Subdivision Regulations and Standard Drawings along with Technical Specifications of the Public Works Director.

7. No minimum patch repair per project area or location. Certain projects may contain less work than other locations and shall be directed by the Town of Smyrna.

8. Bidding will be in accordance with the Tennessee General Contractor's License Law. Bidders on construction to the amount of $25,000.00 or more must be licensed contractors as required by chapter 135 of the public acts of 1945 of the General Assembly of the State of Tennessee, Article I, and amendments thereto. **Bidder's name and license number must be placed on the front of the sealed envelope containing his proposal otherwise the bid will not be opened.**

9. Error In Bid - In case of error in the extension of prices in the bid, the unit price will govern. No bid shall be altered, amended, or withdrawn after specified time for opening bids. Negligence on the part of the bidder in preparing the bid confers no right for the withdrawal of the bid after it has been opened.

10. Inspection - Final inspection and acceptance or rejection will be made at a delivery destination, but all materials and all workmanship shall be subject to inspection and test at all times and places, and when practicable, during construction. The right is reserved to reject articles which contain defective material and workmanship. Rejected materials shall be removed by and at the expense of the contractor promptly after notification of rejection. Final inspection and acceptance or rejection of the materials shall be made as promptly as practicable, but impose no liability on the Town of Smyrna or any subdivision thereof for such materials as are not in accordance with the specifications. Final inspection or acceptance does not relieve the contractor from liability for use of materials or construction standards as are not in accordance with the specifications or industry practices. In the event necessity requires the use of materials or supplies not conforming to the specifications, payment therefore may be made at a proper reduction of price.

11. Specifications - it is understood that reference to available specifications shall be sufficient to make the terms of such specifications binding on the contractor.

12. Term - The term of the contract bid shall be for 12 months from the date of contract execution. Upon mutual agreement of both parties the bid quotes may be renewed by the Town of Smyrna for two additional 12 month periods.

SMYRNA/LOCAL BUSINESS LICENSE

Compensation of more than $100,000 from contracts performed in one county by a contractor described in Tenn. Code Ann. § 67- 4-708(4)(A) will be sourced to that county and the tax from such contracts will be distributed to that county. Compensation of $100,000 or less from contracts performed in one county by such person will be sourced to the county of the person's domicile or location. If the person does not have a domicile or location in Tennessee, such compensation will be earmarked and allocated to the state's general fund.

For purposes of distribution of the municipal business tax provided for in Tenn. Code Ann. § 67-4-705, receipts will be sourced to the municipality in which the person's established physical location, outlet, or other place of business is located. Receipts from sales made by persons operating from an established physical location, outlet, or other place of business in one municipality who extend their operations outside the boundaries of the municipality without establishing a physical location, outlet, or place of business outside the boundaries of the municipality will be sourced to the municipality in which the person's established physical location, outlet, or other place of business is located.

If the person has no established physical location, outlet, or other place of business in the state, then such receipts will not be subject to the municipal business tax. Receipts from all taxable sales of any services or tangible personal property by a provider of video programming services will be sourced to the municipality where the property or service is received by the customer regardless of whether or not the provider has a physical location, outlet, or other place of business in that municipality.

Compensation of more than $100,000 from contracts performed in one municipality by a contractor described in Tenn. Code Ann. § 67- 4-708(4)(A) will be sourced to that municipality and the tax from such contracts will be distributed to that municipality. Compensation of $100,000 or less from contracts performed in one municipality by such person will be sourced to the municipality of the person's domicile or location. If the person does not have a domicile or location in Tennessee, such compensation will not be subject to the municipal business tax. (*from Tennessee Business Tax Guide/ Tenn. Dept. of Revenue 2019; See also, Tennessee Works Tax Act (2023), Public Chapter 377, 2023 Session of the 113th General Assembly*)

INSURANCE REQUIREMENTS

The Contractor shall purchase and maintain for the duration of the contract insurance against claims for injuries to persons or damages to property which may arise from or in connection with the performance of the work hereunder by the Contractor, its agents, representatives, employees or subcontractors.

A. MINIMUM SCOPE AND LIMITS OF INSURANCE

1. **Workers Compensation**

Workers Compensation insurance shall be in compliance with the State of Tennessee and shall be statutory. Employers Liability shall be included with a minimum limit of $500,000 per accident/per disease/per employee.

2. **Commercial General Liability**

Commercial General Liability insurance shall have a minimum limit per occurrence of $1,000,000 and a minimum general aggregate of $2,000,000. It shall include completed operations, product liability and personal injury liability insurance.

3. **Automobile Liability**

Automobile Liability Insurance shall have a minimum combined single limit per occurrence of $1,000,000. This insurance shall include third-party bodily injury and property damage liability for owned, hired, borrowed and non-owned automobiles.

B. DEDUCTIBLES AND SELF-INSURED RETENTIONS

Any deductibles or self-insured retentions must be declared to the Town of Smyrna. The Contractor shall be responsible for all deductibles and self-insured retentions.

C. OTHER INSURANCE PROVISIONS

The policies are to contain, or be endorsed to contain, the following provisions:

1. General Liability and Automobile Liability Coverages
   a. The Town, its elected and appointed officials, agents, employees and volunteers shall be named as an additional insured as regards negligence by the contractor.

   b. The Contractor's insurance shall be primary as respects the Town, its elected and appointed officials, agents, employees and volunteers. Any insurance or self-insurance maintained by the Town of Smyrna shall be excess and non-contributory of the Contractor's insurance.

2. Workers Compensation and Employers Liability Coverage

The insurer shall agree to waive all rights of subrogation against the Town, its elected and appointed officials, agents, employees and volunteers for losses arising from work performed by the Contractor for the Town of Smyrna.

3. All Coverages
   a. Coverage shall not be canceled, suspended, or voided by either party (the Contractor or the insurer) or reduced in coverage or in limits except after 30 days written notice has been given to the Town of Smyrna. Ten-day written notice of cancellation is acceptable for non-payment of premium. Notifications shall comply with the standard cancellation provisions in the Contractor's policy.

   b. Neither the acceptance of the completed work nor the payment thereof shall release the Contractor from the obligations of the insurance requirements or indemnification agreement.

   c. The insurance companies issuing the policies shall have no recourse against the Town of Smyrna for payment of premiums or for assessments under any form of the policies.

d. Replacement certificates, policies or endorsements shall be provided to the Town for any such insurance expiring prior to the completion of services.

e. Any failure of the Contractor to comply with reporting provisions of the policy shall not affect coverage provided to the Town, its elected and appointed officials, agents, employees and volunteers.

D. ACCEPTABILITY OF INSURERS

All required insurance shall be provided by a company or companies licensed to conduct business in the State of Tennessee. Insurance shall be underwritten by insurers with an A.M. Best Company ratings no less than an A.

E. VERIFICATION OF COVERAGE

The Contractor shall furnish the Town with Certificates of Insurance reflecting proof of required coverage. The Certificates for each insurance policy are to be signed by a person authorized by that insurer to bind coverage on its behalf. **The Certificates are to be received and approved by the Town before work commences and upon any contract renewal thereafter.**

Upon failure of the Contractor to furnish, deliver and maintain such insurance as requested, this contract, at the election of the Town, may be suspended, discontinued or terminated. Failure of the Contractor to purchase and/or maintain any required insurance shall not relieve the Contractor from any liability or indemnification under the contract.

The Certificate of Insurance naming the "Town of Smyrna" as **Additional Insured** shall be addressed to the attention of:

Town of Smyrna
Department of Safety & Risk Management
ATTN: Henry Urbina
315 S Lowry St
Smyrna, TN 37167

It can also be submitted electronically to henry.urbina@townofsmyrna.org. The subject line has to indicate the name of the project.

The Town reserves the right to request complete certified copies of all required insurance policies at any time.

F. SUBCONTRACTORS

Contractor shall include all subcontractors as insureds under its policies **OR** shall be responsible for verifying and maintaining the Certificates provided by each subcontractor. Subcontractors shall be subject to all of the requirements stated herein. The Town of Smyrna reserves the right to request copies of subcontractor's Certificates at any time.

G. WORKERS' COMPENSATION INDEMNITY

In the event Contractor is not required to provide or is exempt from providing workers' compensation coverage, the parties hereby agree that Contractor, its owners, agents and employees will have no cause of action against, and will not assert a claim against the Town of Smyrna, its elected and appointed officials, agents, employees and volunteers, under any circumstances. The parties also hereby agree that the Town of Smyrna, its elected and appointed officials, agents, employees and volunteers shall in no circumstance be, or considered as, the employer or statutory employer of Contractor, its owners, agents and employees. The parties further agree that Contractor is a wholly independent contractor and is exclusively responsible for its employees, owners, and agents. Contractor hereby agrees to protect, defend, indemnify and hold the Town of Smyrna, its elected and appointed officials, agents, employees and volunteers harmless from any such assertion or claim that may arise from the performance of this contract.

HOLD HARMLESS AND INDEMNITY REQUIREMENT:

Contractor shall indemnify and hold harmless, to the maximum extent permitted by law, the Town of Smyrna and its officers, agents, employees, volunteers, from and against any and all liability, damages, losses, (whether in contract or in tort, including personal injury, accidental death or property damage, and regardless, of whether the allegations are false, fraudulent or groundless), and costs (including reasonable attorney's fees, litigation, arbitration, mediation, appeal expenses) which in whole or in part are caused by the negligence, recklessness or intentional wrongful misconduct of the Contractor and persons employed by or utilized by the Contractor in Contractor's performance of this Agreement.

The contractor further agrees to protect, defend, and save the Town, its elected and appointed officials, agents, employees and volunteers while working in the scope of their duties as such, harmless from and against all claims, demands, and causes of action of any kind of character, including the cost of their defense, arising in favor of the contractor's employees or third parties on account of bodily or personal injuries, death or damage to property arising out of services performed or omissions of services or in any way resulting from the acts of omissions of the contractor and/or its agents, employees, subcontractors, representative of the Town under this agreement.

Pursuant to Tennessee Attorney General Opinion 93-01, the Town will not indemnify, defend or hold harmless in any fashion the Contractor from any claims arising from any failure, regardless of any language in any attachment or other document that the Contractor may provide.

APPLICABLE LAW:

Any contract resulting from this RFP shall be governed by and construed under the laws of the State of Tennessee.

BID PROPOSAL
TOWN OF SMYRNA, TENNESSEE
ROADWAY PATCHING REPAIRS

Place: Town of Smyrna
Town Hall
315 South Lowry Street
Smyrna, TN 37167

Proposal of Sessions Paving Company (hereinafter referred to as "Bidder"), a **corporation / ~~partnership~~ / ~~individual~~** (STRIKE OUT INAPPLICABLE TERMS) doing business as a corporation within Davidson County, Tennessee (COUNTY AND STATE).

To: Mr. Rex Gaither (Finance Director)
Town of Smyrna
315 South Lowry Street
Smyrna, TN 37167

Mr. Gaither:
The Bidder, in compliance with your Advertisement for Bids for the TOWN OF SMYRNA, TENNESSEE (Owner), **ROADWAY PATCHING REPAIRS**, having examined the drawings and specifications with related documents and the sites of the proposed work, and being familiar with all of the conditions surrounding the construction of the proposed project (including the availability of materials and labor), hereby proposes to furnish, as applicable, all labor, materials, and supplies to construct the project in accordance with the Contract Documents within the time set forth therein and at the prices stated below. These prices are to cover all expenses incurred in performing the work required under the bidding instruments, of which this proposal is a part.

The undersigned Bidder does hereby declare and stipulate that this proposal is made in good faith, without collusion or connection with any other person or persons bidding for the same work, and that it is made in pursuance of and subject to all the terms and specifications, and the drawings pertaining to the work to be done, all of which have been examined by the undersigned.

The Bidder hereby agrees to commence work under this contract on or before a date to be specified in a written "Notice to Proceed" and to perform the work in accordance with an annual contract basis in which work will be completed in a timely manner as the repair areas and locations are directed to the contractor by the Owner. The term of the contract bid shall be for 12 months from the date of contract execution. Upon mutual agreement of both parties the bid quotes may be renewed by the Owner for two additional 12 month periods.

The Bidder hereby agrees that preference will be given to domestic Construction materials and further agrees to require subcontractors, materialmen, and suppliers to also give preference to domestic construction materials.

The Bidder acknowledges receipt of the following addenda:

Addendum No: 1 Dated: 2/9/2024 Addendum No: ____ Dated:

The owner reserves the right to reject any or all bids and to waive any informality.
The Bidder agrees to furnish, pay for and install all plant, labor, materials, equipment, and incidentals necessary for the construction, testing, and placing into operation of the TOWN OF SMYRNA, TENNESSEE, ROADWAY PATCHING REPAIRS, all in accordance with the drawings and specifications, for the unit prices as shown below:

Roadway Patching Repairs					
Item / Alternate	Description	Estimated Quantity	Unit	Unit Price	Cost
Item 1	10" crushed base stone Type A Base Grading D Pub Mill Mix, 3" 307 B-Modified Binder Mix, and 1.5" 411-E Topping Mix	1000	SY	156.00	$156,000.00
Alternate 1	2-feet of Surge Stone below existing base stone	1000	SY	70.00	70,000.00

Note: All costs associated with items indicated above to include but are not limited to materials, labor, and equipment to install. Costs also include performing saw cutting existing pavement, milling, planning, excavation, disposal of existing material, subgrade, subgrade compaction, base stone, base stone compaction, prime coat, binder mix, tack coat, topping mix, additional gravel required for traffic control and all other incidentals required to provide complete and operable roadway repairs. Other costs included in the items indicated above include but are not limited to bailing, shoring, removal, overhead, profit, insurance, etc. to cover the finished work.

Amount shall be shown in both words and figures. In case of a discrepancy, the amount in words shall govern.

Sessions Paving Company
by Robert A. Hutchison President

The Bidder understands that the Owner reserves the right to select either the base bid or alternate bid and to make award on the basis deemed to be in the best interest of the Owner provided it is consistent with the bidder's above indicated request. The Owner also reserves the right to reject any or all bids and to waive any informality in the bidding.

It is the desire of the Owner to award this contract to a single contractor on the basis of the total base bid or alternate bid as set forth above. The bidder understands that the roadway repair

ROADWAY PATCHING REPAIRS

FOR

TOWN OF SMYRNA, TENNESSEE

ADDENDUM NO. 1

Issued Date: February 9, 2024

Bid Date: February 22, 2024

RE: Addition of Alternate Items 2, 3 and 4

To: All Contractors

The following items are hereby revised for the "Roadway Patching Repairs" bid. Contractors shall consider these items to be a part of the Bid Documents and complete their Bid Submittals accordingly. Each Bidder should acknowledge receipt of this Addendum on the Bid Form. Failure to do so does not relieve the Contractor from the requirements contained herein.

This Addendum is to add Alternate items 2, 3 and 4 on page 11 of the bid document.

Item / Alternate	Description	Estimated Quantity	Unit	Unit Price	Cost
Alternate 2	6-inches of 307-B Modified Binder Mix	1000	SY	118.00	118,000.00
Alternate 3	1.5-inches of 411-E Topping Mix	1000	SY	34.00	34,000.00
Alternate 4	1.5-inches of 411-D Topping Mix	1000	SY	35.00	35,000.00

Sessions Paving Company
by Robert N. Hutcheson
President

quantities set forth in the bid form are estimates only and the actual installation quantities could be higher or lower than the estimated quantities.

Bonds- The successful contractor shall furnish 100% surety bonds as security for faithful performance of this contract and for the payment of all persons performing labor on the project under this contract and furnishing materials in connection with this contract. The bond must be written by a surety or insurance company listed on the U.S. Department of the Treasury financial management service list of approved bonding companies at the time the bond is provided. The surety or insurance company must be licensed to do business as a surety or insurer with the State of Tennessee. The surety on such bond or bonds shall be a duly authorized surety company satisfactory to the Owner.

All the various phases of work enumerated in the detailed specifications with their individual jobs and overhead, whether specifically mentioned, included by implication, or appurtenant thereto, are to be performed by the contractor under one of the items listed in the bid schedule, irrespective of whether they are named in said list. Payment for work performed will be in accordance with the bid schedule, subject to changes provided for in the construction contract.

AFFIDAVIT

STATE OF TENNESSEE DRUG-FREE WORKPLACE AFFIDAVIT

COUNTY OF Davidson **OF PRIME BIDDER**

NOW COMES AFFIANT, who being duly sworn, deposes and says:

1. He/She is the principal officer for Sessions Paving Company;

2. That the bidding entity has submitted a bid to the Town of Smyrna for the construction of Roadway Patching Repairs;

3. That the bidding entity employs no less than five (5) employees;

4. That Affiant certifies that the bidding entity has in effect, at the time of submission of its bid to perform the construction referred to above, a drug-free workplace program that complies with §50-9-113, *Tennessee Code Annotated.*

5. That this affidavit is made on personal knowledge.

Further Affiant saith not.

Robert A. Hutcheson
AFFIANT President

SUBSCRIBED AND SWORN TO before me this 22nd day of February, 2024

JEAN M. STARKEY
STATE OF TENNESSEE NOTARY PUBLIC
COUNTY OF DAVIDSON

Jean M. Starkey
NOTARY PUBLIC

My Commission Expires: March 03, 2025

50-9-113. State and local government construction contracts

(a) Each employer with no less than five (5) employees receiving pay who contracts with the state or any local government to provide construction services or who is awarded a contract to provide construction services or who provides construction services to the state or local government shall submit an affidavit stating that such employer has a drug-free workplace program that complies with this chapter, in effect at the time of such submission of a bid at least to the extent required of governmental entities. Any private employer that certifies compliance with the drug-free workplace program, only to the extent required by this section, shall not receive any reduction in workers' compensation premiums and shall not be entitled to any other benefit provided by compliance with the drug-free workplace program set forth in this chapter. Nothing in this section shall be construed to reduce or diminish the rights or privileges of any private employer who has a drug-free workplace program that fully complies with this chapter. For purposes of compliance with this section, any private employer shall obtain a certificate of compliance with the applicable portions of the Drug-free Workplace Act from the department of labor and workforce development. No local government or state governmental entity shall enter into any contract or award a contract for construction services with an employer who does not comply with the provisions of this section.

(b) For the purposes of this section, "employer" does not include any utility or unit of local government. "Employer" includes any private company and/or corporation.

(c) If it is determined that an employer subject to the provisions of this section has entered into a contract with a local government or state agency and such employer does not have a drug-free workplace pursuant to this section, such employer shall be prohibited from entering into another contract with any local government or state agency until such employer can prove compliance with the drug-free workplace program pursuant to this section. If the same employer again contracts with any local government or state agency and does not have a drug-free workplace program pursuant to this section, then such employer shall be prohibited from entering into another contract with any local government or state agency for not less than three (3) months from the date such violation was discovered and verified and shall be prohibited from entering into another contract until such employer complies with the drug-free workplace program pursuant to this section. If the same employer for a third time contracts with any local government or state agency and does not have a drug-free workplace program pursuant to this section, then such employer shall be prohibited from entering into another contract with any local government or state agency for not less than one (1) year from the date such violation was discovered and verified and shall be prohibited from entering into another contract until such employer complies with the drug-free workplace program pursuant to this section.

(d) A written affidavit by the principal officer of a covered employer provided to a local government at the time such bid or contract is submitted stating that the employer is in compliance with this section shall absolve the local government of all further responsibility under this section and any liability arising from the employer's compliance or failure of compliance with the provisions of this section.

[Acts 2000, ch.918,§§ 1,2.]

TOWN OF SMYRNA CONSTRUCTION CONTRACT

CERTIFICATE OF NONDISCRIMINATION

As Bidder, Contractor, or Subcontractor on Town of Smyrna Construction Project,

Sessions Paving Company

1. the undersigned states that he does not discriminate against any subcontractor, employee or applicant for employment on the grounds of race, color, national origin or sex and, if awarded a contract for this project, agrees in performance of work:

2. not to discriminate against any subcontractor, employee, or applicant for employment on the grounds of race, color, national origin or sex;

3. to maintain payrolls of laborers and mechanics employed on this contract until 90 days after final release and final payment by the Town;

4. require a similar certificate to be executed by each subcontractor at the time a subcontractor is executed under the contract with the requirement that such subcontractor agrees to require a similar certificate of requirement on any lower tier of subcontractors.

Contractor's Name Sessions Paving Company Date 2/22/2024

Signature Robert N. Hutcheson Title President

Printed or typed name and title
Robert N. Hutcheson President

TOWN OF SMYRNA

TITLE VI COMPLIANCE SURVEY

The Town of Smyrna intends to fully comply with the Tennessee Department of Transportation's policy regarding TITLE VI of the CIVIL RIGHTS ACT of 1964; 49 CFT, PART 21; related statutes and regulations to the end that no person shall be excluded from participation in or be denied the benefits of, or be subjected to discrimination under any program or activity receiving federal financial assistance from the U.S. Department of Transportation on the grounds of race, color, gender, age, disability or national origin.

Please complete the following information:

NAME OF COMPANY: Sessions Paving Company

NAME OF OWNER/CONTRACTOR: Sessions Paving Company

ADDRESS OF OWNER/CONTRACTOR: P.O. Box 90266 (6535 Robertson Avenue) Nashville, TN 37209

COUNTY: Davidson

TYPE OF SERVICES PROVIDED: Asphalt Paving & Patching

CONTRACT: Roadway Patching Repairs

OWNER/CONTRACTOR (Race/Gender)	
White Male	✓
White Female	
African-American Male	
African-American Female	
Hispanic Male	
Hispanic Female	
Native American Male	
Native American Female	
Asian-American Male	
Asian-American Female	
Other _____ Male	
Other _____ Females	

EMPLOYEES (Number in each category)	
White Males	43
White Females	5
African-American Males	4
African-American Females	6
Hispanic Males	8
Hispanic Females	
Native American Males	
Native American Females	
Asian-American Males	
Asian-American Females	
Other _____ Males	1
Other _____ Females	

TOWN OF SMYRNA CONSTRUCTION CONTRACT

CERTIFICATE OF NON-ILLEGAL IMMIGRANT USE

As Bidder, Contractor, or Subcontractor on Town of Smyrna Construction Project,

Sessions Paving Company

1. the undersigned states that he does not knowingly utilize the services of **illegal immigrants** in the performance of a contract for goods or services entered into with the Town of Smyrna:

2. and will not knowingly utilize the services of any subcontractor who will utilize the services of **illegal immigrants** in the performance of the contract;

3. If any person who contracts to supply goods or services to the Town of Smyrna or who submits a bid to contract to supply goods or services to the state or other state entities, is discovered to have knowingly utilized the services of **illegal immigrants** in the performance of the contract to supply goods or services to the Town of Smyrna, the Town of Smyrna shall declare that person to be prohibited from contracting for or submitting a bid for any contract to supply goods or services to the Town of Smyrna for a period of one (1) year from the date of discovery of the usage of **illegal** immigrant services in the performance of a contract to supply goods or services to the Town of Smyrna

Contractor's Name Sessions Paving Company Date 2/22/2024

Signature Robert J. Hutcheson Title President

Printed or typed name and title

Robert N. Hutcheson President

TOWN OF SMYRNA CONSTRUCTION CONTRACT

CERTIFICATE OF NON-COLLUSION

As Bidder, Contractor, or Subcontractor on Town of Smyrna Construction Project:

Sessions Paving Company

the undersigned hereby declares that no person or party other than the undersigned has any interest whatever in the submitted bid proposal, that it is without any connection or collusion with any person or persons making or having made any proposal for the same work and without any previous understanding with such person or persons as to relative prices, obviating competition, and that it is made in good faith.

Contractor's Name Sessions Paving Company Date 2/22/2024

Signature Robert J. Hutcheson Title President

Printed or typed name and title

Robert N. Hutcheson President

AGREEMENT

This Agreement is made and entered into as of this _____ day of _____, 20____, by and between _____, a _____ _____ (the "Bidder") and the Town of Smyrna, Tennessee, a Tennessee municipal corporation (the "Town") for the purpose of _____.

WHEREAS, the Bidder has submitted a quotation for the provision of certain products and/or services to the Town, all in accordance with the terms of the Invitation to Submit Quotations attached hereto and incorporated herein by reference as if set forth at length verbatim as Exhibit A (the "ISQ"), and which Proposal from the Bidder is attached hereto and incorporated herein by reference as if set forth at length verbatim as Exhibit B (the "Quotation"); the ISQ and the Quotation, together with any and all ancillary documents thereto, shall be collectively referred to herein as the "Bid Documents"; and

WHEREAS, the Town now desires to accept the Bidder's quotation, in accordance with the terms set forth in such Bid Documents.

NOW, THEREFORE, in consideration of the mutual covenants contained herein, and for other good and valuable consideration, the receipt and sufficiency of which is hereby acknowledged, the undersigned do hereby agree as follows:

1. Acceptance of Bid Documents. The terms of the Bid Documents, as incorporated herein by reference, are hereby accepted by the parties hereto. The Bidder hereby agrees to provide the goods and/or services contemplated by such Bid Documents in accordance with the terms set forth therein. The Town hereby accepts the Bidder's quotation to provide the goods and/or services contemplated by such Bid Documents in accordance with the terms set forth therein.

2. Entire Agreement. This Agreement, including the exhibits and any other documents referred to herein or therein, which form a part hereof, contains the entire understanding of the parties with respect to its subject matter. There are no restrictions, agreements, promises, warranties, covenants or undertakings other than those expressly set forth herein or therein. This Agreement supersedes all prior written or oral agreements and understandings between the parties with respect to its subject matter and may not be altered, modified or amended, in whole or in part, except by the express written authorization and consent of the parties hereto.

3. Severability. This agreement constitutes the product of negotiations of the parties hereto and any enforcement of hereof will be interpreted in a neutral manner and not more strongly against any party based upon the source of the draftsmanship of this Agreement. If any provision of this Agreement shall be held invalid or unenforceable by a court of competent jurisdiction, the remaining provisions hereof shall continue to be fully effective.

4. Limitation of Liability. The Town of Smyrna shall not be liable for any loss, claim, expense or damage caused by, contributed to or arising out of the acts or omission of Bidder or third parties, whether negligent or otherwise.

5. Warranties. The Bidder warrants to the Town that all materials and equipment furnished under this Contract will be new unless otherwise specified, and that all work will be of good quality, free from faults and defects, suitable for the purpose for which the materials and equipment are furnished, and in conformance with the Agreement. If it does not perform as warranted, Bidder shall use all commercially reasonable efforts to correct the product(s) so that it operates in all material respects in conformity with the written representations of Bidder. If Bidder cannot correct the product(s) within a reasonable period of time, Bidder shall refund the purchase price of the product(s). All work not conforming to these requirements, including substitutions not properly approved and authorized, may be considered defective.

6. Software Deadline, Testing and Acceptance: If applicable to the Agreement, software provided by Bidder shall be installed for the purposes of testing, as stated herein below, no later than one hundred twenty (120) days from the effective date of this Agreement unless the parties, in writing, set a different specific date. In Addition, software provided by Bidder to The Town is subject to inspection and testing to verify that the software conforms to its written specifications and to ensure it meets The Town's needs. The Town shall have seven (7) business days after the software is installed to perform testing of the software using The Town's data. The Town shall provide Bidder with written notice of acceptance or rejection of the software five (5) business days or less after the end of the testing period. If the Town does not provide timely written notice of acceptance or rejection to Bidder, the software shall be deemed to be accepted by The Town. If the software is rejected, The Town may, at its sole discretion, either (1) return the software and receive a refund of all fees paid with respect thereto, or (2) allow Bidder to repair or replace the software, without charge, in a timely manner. In the event The Town elects to allow the Bidder to repair or replace the software, The Town shall have an additional (7) business days in which to accept or reject the software as laid out hereinabove.

7. Use of The Town's Logo or Name: Bidder shall not use The Town's name or any logo in marketing or publicity materials or for marketing or publicity purposes without the prior written authorization from The Town. Bidder shall not issue, publish, or divulge any materials developed or used in the performance of this Agreement or make any statement to the media relating to this Agreement without the prior written consent of The Town.

8. Indemnification. The parties hereto agree that Bidder shall indemnify The Town for any and all claims of negligence, tortious conduct or otherwise unlawful acts committed by Bidder in the performance of their obligations under the terms of this agreement, including any and all attachments or exhibits thereto and Bidder agrees to pay any and all costs associated with the enforcement of the terms of this indemnity agreement by The Town, including but not limited to, court costs, civil judgments, assessments or any other reasonable fees associated therewith. This clause shall survive the expiration or termination of this Agreement and shall remain in full force and effect until the expiration of any applicable statute of limitation. In addition, Article II, Section 29 of the Tennessee Constitution prohibits municipalities from lending their credit to private of public entities and, therefore, prohibits an agreement by The Town to indemnify a third party or agree to a limitation of liability provision.

9. Non-Appropriation: Bidder acknowledges that The Town is a governmental entity, and the validity of this Agreement is based upon the availability of public funding under its authority. In the event The Town fails to appropriate funds or make monies available for any fiscal year covered by the term of this Agreement for services to be provided, this Agreement shall be terminated on the last day of the fiscal year for which funds were appropriated or monies made available for such purposes without liability to The Town, and such termination shall not be a breach of the Agreement, and any unused payment made to Bidder shall be returned to The Town.

10. Tax Exemption: As a tax-exempt entity, The Town shall not be responsible for sales or use taxes incurred for products or services. The Town shall supply Bidder with its Sales and Use Tax Exemption Certificate upon Bidder's request. Bidder shall bear the burden of providing its suppliers with a copy of The Town's tax exemption certificate and Bidder shall assume all liability for such taxes, if any, that should be incurred.

11. Attorney Fees. The parties hereto agree that The Town shall be in no event liable for any attorney's fees which Bidder may incur due to breach of this Agreement by either party; and further, The Town shall not acquiesce to any term in any document that indicates or infers The Town may or shall be responsible for the Attorney's fees of another party or the Bidder's attorney fees.

12. Boycott of Israel. The Bidder certifies that it is not currently engaged in, and covenants that it will not, for the duration of the Contract, engage in a Boycott of Israel, as that term is defined in Tenn. Code Ann. § 12-4-119.

13. Failure to perform. The parties agree, in the event Bidder fails to perform any obligation, other than with regards to the date of delivery, set out in this Agreement, the Town shall be reimbursed by Bidder for any and all expenses associated with having to obtain a new provider to finish out the contracted term, including, but in no way limited to, any charges/fees, which are above and beyond the amount the Town would have paid to Bidder to complete the same task; provided, however, that if the failure, by its nature, is one that can be cured, the Bidder shall have fifteen (15) business days after receipt of written notice from the Town to cure said failure to perform. The parties hereby agree, unless a specific date of delivery is provided in this Agreement or other bid documents, all deliveries shall be made to the Town no later than ninety (90) days from the date of order. The parties further agree that if Bidder, in good faith, is not able to meet this ninety (90) day deadline of delivery due to forces beyond his, her or its control, that were unforeseeable at the time of signing this contract, then this entire Agreement shall be voidable at the sole discretion of the Town. Should the Town elect to void this Agreement due to Bidder's good faith inability, due to forces beyond his, her or its control, and which were unforeseeable at the time of signing this Agreement to meet the delivery deadline, then neither party shall be deemed to have breached this Agreement, and Bidder shall return all monies, within seven (7) business days, paid by the Town for the products/items that could not be delivered in the allotted time.

14. Unilateral Modification of Agreement Not Permitted: Bidder may make unilateral changes to its Privacy Policy, provided any such changes are subject to the provisions of this Agreement but shall not materially alter the use of the service or reduce the level of protection provided to the Town at the time of the execution of this Agreement. Except as provided in the preceding sentence, notwithstanding anything in this Agreement to the contrary, any change to this Agreement made by Bidder that is not in writing and that is not properly executed by the signatures of authorized representatives of the parties hereto, including attestation by The Town's Clerk and approved as to form by the Town Attorney are subject to the terms and conditions of this Agreement.

15. Changes to Terms: Except as provided in Paragraph No. 13 above pertaining to Bidder's Privacy Policy, Bidder shall provide The Town written notice, sent in care of Town Attorney's Office, Smyrna, Tennessee, 315 South Lowry Street, Tennessee 37167, of any proposed change to this Agreement at least ninety (90) days prior to being effective to The Town. The Town shall have thirty (30) days after receiving the written notice to terminate this Agreement, and such cancellation shall not be a breach of this Agreement. Bidder will refund to The Town any payment made by The Town to Bidder equal to the difference between the number of months the payment was intended for and the number of months remaining on this Agreement that the fee was intended to cover.

16. Price Assurance: Unless specifically stated in this Agreement or other bid documents, the bid price shall be valid for the full term of this Agreement. If the Bidder, specifically states that he, she or it cannot honor the bid price for the full term of this Agreement; then this Agreement is voidable at the sole discretion of the Town, if at any time during the full term of this Agreement, Bidder requests to raise the bid price. If the Town elects to void this Agreement, at its sole discretion, it shall not be deemed to be a breach of the contract by either party.

17. Confidentiality. The Town, as a Tennessee Municipal Corporation is subject to the Tennessee Open Records Act, set out in T.C.A. §10-7-503 et seq; therefore, this Agreement and all documents or materials, in any format, including, but not limited to paper, electronic or virtual, that are public records pursuant to law, are not confidential and are subject to disclosure. The Town will respond to all proper Open Records Requests in the time allowed by law, without any requirement to disclose such request to Bidder or provide Bidder with notice or the time to obtain a protective order. The Town does not have the burden of establishing that information is not confidential information or that its release is authorized to release the records. This section 16 serves to meet such burden and authorization of disclosure.

18. Mediation. The Town may, at its option, require the attempted resolution of any dispute arising under this Agreement by mediation prior to the filing of any lawsuit or other claim. Should any dispute arise, Bidder shall provide the Town notice of any intent to file suit by certified mail. The Town shall notify the Bidder of its intent to exercise its right to mediation within thirty (30) days of receiving such notice. If the Town does not exercise its right to mediation, Bidder may file suit. Any mediator selected under this clause shall be agreed upon by the parties and the costs of such mediation shall be divided and paid equally between the parties.

19. No Presumption Against Drafter: The parties are both business entities having substantial experience with the subject matter of this Agreement, and each has fully participated in the negotiation and drafting of this Agreement. Accordingly, this Agreement shall be construed without regard to the rule that ambiguities in a document are to be construed against the draftsman. No inferences shall be drawn from the fact that the final, duly executed Agreement differs in any respect from any previous draft hereof.

20. Governing Law. This Agreement shall be deemed to have been executed and delivered within the State of Tennessee, and the rights and obligations of the parties shall be construed and enforced in accordance with, and governed by, the laws of the State of Tennessee. The parties agree that all obligations of the parties are performable in Smyrna, Tennessee.

21. Choice of Forum and Venue. The parties' choice of forum and venue shall be exclusively in the courts of Rutherford County, Tennessee or the United States District Court, for the Middle District of Tennessee. The parties hereby waive their right to a jury trial. Any provision of the Agreement held to violate a law or regulation shall be deemed void, and all remaining provisions shall continue in force.

IN WITNESS WHEREOF, the undersigned have executed this Agreement as of the date set forth above.

TOWN OF SMYRNA, TENNESSEE	**BIDDER:**
By: _____	By: _____
Name: Mary Esther Reed	Title: _____
Title: Mayor	
ATTEST:	ATTEST:
_____	_____
Amber Hobbs, Town Clerk	

SECTION IV - SPECIFICATION COMPLIANCE

Unless otherwise noted, all quotations for the roadway patching repairs shall be in complete accordance with the specifications detailed herein.

Bidders shall note in the space provided below any exceptions or deviations in any way from the specifications of any section of this ISQ. Bidders should provide complete detail of exceptions or deviations.

Proposal Exceptions

Section	Brief Description

By signature below, contractor acknowledges any quotation to be in full compliance with all aspects
of each section of the ISQ not noted above.

Sessions Paving Company	(-15) 356-6666
COMPANY	PHONE NUMBER
Robert N. Hutcheson	President
REPRESENTATIVE NAME	REPRESENTATIVE TITLE
Robert N. Hutcheson	rnhutcheson@sessionspaving.com
SIGNATURE	E-MAIL ADDRESS

AGREEMENT

This Agreement is made and entered into as of this _____ day of June, 2024, by and between Sessions Paving Company, a TN Corporation _____ (the "Bidder") and the Town of Smyrna, Tennessee, a Tennessee municipal corporation (the "Town") for the purpose of Roadway Patching.

WHEREAS, the Bidder has submitted a quotation for the provision of certain products and/or services to the Town, all in accordance with the terms of the Invitation to Submit Quotations attached hereto and incorporated herein by reference as if set forth at length verbatim as Exhibit A (the "ISQ"), and which Proposal from the Bidder is attached hereto and incorporated herein by reference as if set forth at length verbatim as Exhibit B (the "Quotation"); the ISQ and the Quotation, together with any and all ancillary documents thereto, shall be collectively referred to herein as the "Bid Documents"; and

WHEREAS, the Town now desires to accept the Bidder's quotation, in accordance with the terms set forth in such Bid Documents.

NOW, THEREFORE, in consideration of the mutual covenants contained herein, and for other good and valuable consideration, the receipt and sufficiency of which is hereby acknowledged, the undersigned do hereby agree as follows:

1. Acceptance of Bid Documents. The terms of the Bid Documents, as incorporated herein by reference, are hereby accepted by the parties hereto. The Bidder hereby agrees to provide the goods and/or services contemplated by such Bid Documents in accordance with the terms set forth therein. The Town hereby accepts the Bidder's quotation to provide the goods and/or services contemplated by such Bid Documents in accordance with the terms set forth therein.

2. Entire Agreement. This Agreement, including the exhibits and any other documents referred to herein or therein, which form a part hereof, contains the entire understanding of the parties with respect to its subject matter. There are no restrictions, agreements, promises, warranties, covenants or undertakings other than those expressly set forth herein or therein. This Agreement supersedes all prior written or oral agreements and understandings between the parties with respect to its subject matter and may not be altered, modified or amended, in whole or in part, except by the express written authorization and consent of the parties hereto.

3. Severability. This agreement constitutes the product of negotiations of the parties hereto and any enforcement of hereof will be interpreted in a neutral manner and not more strongly against any party based upon the source of the draftsmanship of this Agreement. If any provision of this Agreement shall be held invalid or unenforceable by a court of competent jurisdiction, the remaining provisions hereof shall continue to be fully effective.

4. Limitation of Liability. The Town of Smyrna shall not be liable for any loss, claim, expense or damage caused by, contributed to or arising out of the acts or omission of Bidder or third parties, whether negligent or otherwise.

5. Warranties. The Bidder warrants to the Town that all materials and equipment furnished under this Contract will be new unless otherwise specified, and that all work will be of good quality, free from faults and defects, suitable for the purpose for which the materials and equipment are furnished, and in conformance with the Agreement. If it does not perform as warranted, Bidder shall use all commercially reasonable efforts to correct the product(s) so that it operates in all material respects in conformity with the written representations of Bidder. If Bidder cannot correct the product(s) within a reasonable period of time, Bidder shall refund the purchase price of the product(s). All work not conforming to these requirements, including substitutions not properly approved and authorized, may be considered defective.

6. Software Deadline, Testing and Acceptance: If applicable to the Agreement, software provided by Bidder shall be installed for the purposes of testing, as stated herein below, no later than one hundred twenty (120) days from the effective date of this Agreement unless the parties, in writing, set a different specific date. In Addition, software provided by Bidder to The Town is subject to inspection and testing to verify that the software conforms to its written specifications and to ensure it meets The Town's needs. The Town shall have seven (7) business days after the software is installed to perform testing of the software using The Town's data. The Town shall provide Bidder with written notice of acceptance or rejection of the software five (5) business days or less after the end of the testing period. If the Town does not provide timely written notice of acceptance or rejection to Bidder, the software shall be deemed to be accepted by The Town. If the software is rejected, The Town may, at its sole discretion, either (1) return the software and receive a refund of all fees paid with respect thereto, or (2) allow Bidder to repair or replace the software, without charge, in a timely manner. In the event The Town elects to allow the Bidder to repair or replace the software, The Town shall have an additional (7) business days in which to accept or reject the software as laid out hereinabove.

7. Use of The Town's Logo or Name: Bidder shall not use The Town's name or any logo in marketing or publicity materials or for marketing or publicity purposes without the prior written authorization from The Town. Bidder shall not issue, publish, or divulge any materials developed or used in the performance of this Agreement or make any statement to the media relating to this Agreement without the prior written consent of The Town.

8. Indemnification. The parties hereto agree that Bidder shall indemnify The Town for any and all claims of negligence, tortious conduct or otherwise unlawful acts committed by Bidder in the performance of their obligations under the terms of this agreement, including any and all attachments or exhibits thereto and Bidder agrees to pay any and all costs associated with the enforcement of the terms of this indemnity agreement by The Town, including but not limited to, court costs, civil judgments, assessments or any other reasonable fees associated therewith. This clause shall survive the expiration or termination of this Agreement and shall remain in full force and effect until the expiration of any applicable statute of limitation. In addition, Article II, Section 29 of the Tennessee Constitution prohibits municipalities from lending their credit to private of public entities and, therefore, prohibits an agreement by The Town to indemnify a third party or agree to a limitation of liability provision.

9. Non-Appropriation: Bidder acknowledges that The Town is a governmental entity, and the validity of this Agreement is based upon the availability of public funding under its authority. In the event The Town fails to appropriate funds or make monies available for any fiscal year covered by the term of this Agreement for services to be provided, this Agreement shall be terminated on the last day of the fiscal year for which funds were appropriated or monies made available for such purposes without liability to The Town, and such termination shall not be a breach of the Agreement, and any unused payment made to Bidder shall be returned to The Town.

10. Tax Exemption: As a tax-exempt entity, The Town shall not be responsible for sales or use taxes incurred for products or services. The Town shall supply Bidder with its Sales and Use Tax Exemption Certificate upon Bidder's request. Bidder shall bear the burden of providing its suppliers with a copy of The Town's tax exemption certificate and Bidder shall assume all liability for such taxes, if any, that should be incurred.

11. Attorney Fees. The parties hereto agree that The Town shall be in no event liable for any attorney's fees which Bidder may incur due to breach of this Agreement by either party; and further, The Town shall not acquiesce to any term in any document that indicates or infers The Town may or shall be responsible for the Attorney's fees of another party or the Bidder's attorney fees.

12. Boycott of Israel. The Bidder certifies that it is not currently engaged in, and covenants that it will not, for the duration of the Contract, engage in a Boycott of Israel, as that term is defined in Tenn. Code Ann. § 12-4-119.

13. Failure to perform. The parties agree, in the event Bidder fails to perform any obligation, other than with regards to the date of delivery, set out in this Agreement, the Town shall be reimbursed by Bidder for any and all expenses associated with having to obtain a new provider to finish out the contracted term, including, but in no way limited to, any charges/fees, which are above and beyond the amount the Town would have paid to Bidder to complete the same task; provided, however, that if the failure, by its nature, is one that can be cured, the Bidder shall have fifteen (15) business days after receipt of written notice from the Town to cure said failure to perform. The parties hereby agree, unless a specific date of delivery is provided in this Agreement or other bid documents, all deliveries shall be made to the Town no later than ninety (90) days from the date of order. The parties further agree that if Bidder, in good faith, is not able to meet this ninety (90) day deadline of delivery due to forces beyond his, her or its control, that were unforeseeable at the time of signing this contract, then this entire Agreement shall be voidable at the sole discretion of the Town. Should the Town elect to void this Agreement due to Bidder's good faith inability, due to forces beyond his, her or its control, and which were unforeseeable at the time of signing this Agreement to meet the delivery deadline, then neither party shall be deemed to have breached this Agreement, and Bidder shall return all monies, within seven (7) business days, paid by the Town for the products/items that could not be delivered in the allotted time.

14. Unilateral Modification of Agreement Not Permitted: Bidder may make unilateral changes to its Privacy Policy, provided any such changes are subject to the provisions of this Agreement but shall not materially alter the use of the service or reduce the level of protection provided to the Town at the time of the execution of this Agreement. Except as provided in the preceding sentence, notwithstanding anything in this Agreement to the contrary, any change to this Agreement made by Bidder that is not in writing and that is not properly executed by the signatures of authorized representatives of the parties hereto, including attestation by The Town's Clerk and approved as to form by the Town Attorney are subject to the terms and conditions of this Agreement.

15. Changes to Terms: Except as provided in Paragraph No. 13 above pertaining to Bidder's Privacy Policy, Bidder shall provide The Town written notice, sent in care of Town Attorney's Office, Smyrna, Tennessee, 315 South Lowry Street, Tennessee 37167, of any proposed change to this Agreement at least ninety (90) days prior to being effective to The Town. The Town shall have thirty (30) days after receiving the written notice to terminate this Agreement, and such cancellation shall not be a breach of this Agreement. Bidder will refund to The Town any payment made by The Town to Bidder equal to the difference between the number of months the payment was intended for and the number of months remaining on this Agreement that the fee was intended to cover.

16. Price Assurance: Unless specifically stated in this Agreement or other bid documents, the bid price shall be valid for the full term of this Agreement. If the Bidder, specifically states that he, she or it cannot honor the bid price for the full term of this Agreement; then this Agreement is voidable at the sole discretion of the Town, if at any time during the full term of this Agreement, Bidder requests to raise the bid price. If the Town elects to void this Agreement, at its sole discretion, it shall not be deemed to be a breach of the contract by either party.

17. Confidentiality. The Town, as a Tennessee Municipal Corporation is subject to the Tennessee Open Records Act, set out in T.C.A. §10-7-503 et seq; therefore, this Agreement and all documents or materials, in any format, including, but not limited to paper, electronic or virtual, that are public records pursuant to law, are not confidential and are subject to disclosure. The Town will respond to all proper Open Records Requests in the time allowed by law, without any requirement to disclose such request to Bidder or provide Bidder with notice or the time to obtain a protective order. The Town does not have the burden of establishing that information is not confidential information or that its release is authorized to release the records. This section 16 serves to meet such burden and authorization of disclosure.

18. Mediation. The Town may, at its option, require the attempted resolution of any dispute arising under this Agreement by mediation prior to the filing of any lawsuit or other claim. Should any dispute arise, Bidder shall provide the Town notice of any intent to file suit by certified mail. The Town shall notify the Bidder of its intent to exercise its right to mediation within thirty (30) days of receiving such notice. If the Town does not exercise its right to mediation, Bidder may file suit. Any mediator selected under this clause shall be agreed upon by the parties and the costs of such mediation shall be divided and paid equally between the parties.

19. No Presumption Against Drafter: The parties are both business entities having substantial experience with the subject matter of this Agreement, and each has fully participated in the negotiation and drafting of this Agreement. Accordingly, this Agreement shall be construed without regard to the rule that ambiguities in a document are to be construed against the draftsman. No inferences shall be drawn from the fact that the final, duly executed Agreement differs in any respect from any previous draft hereof.

20. Governing Law. This Agreement shall be deemed to have been executed and delivered within the State of Tennessee, and the rights and obligations of the parties shall be construed and enforced in accordance with, and governed by, the laws of the State of Tennessee. The parties agree that all obligations of the parties are performable in Smyrna, Tennessee.

21. Choice of Forum and Venue. The parties' choice of forum and venue shall be exclusively in the courts of Rutherford County, Tennessee or the United States District Court, for the Middle District of Tennessee. The parties hereby waive their right to a jury trial. Any provision of the Agreement held to violate a law or regulation shall be deemed void, and all remaining provisions shall continue in force.

IN WITNESS WHEREOF, the undersigned have executed this Agreement as of the date set forth above.

TOWN OF SMYRNA, TENNESSEE

By: _____
Name: Mary Esther Reed
Title: Mayor

ATTEST:

_____
Amber Hobbs, Town Clerk

BIDDER: Sessions Paving Company

By: _____
Title: President

ATTEST:

_____

Town of Smyrna
Town Council Meeting
Agenda Summary

Agenda Item Number 5.h.
Department: Public Works
Date: July 14, 2026

Subject:
Approval of the terms of, and authorization for the Mayor to execute, a time extension with the Tennessee Department of Transportation (TDOT) for the Florence Road Sidewalks project to April 30, 2028.

Fiscal Impact:
No fiscal impact. This is a time extension.

Contract Type:
Contract Change Order /Amendment

Contract Term (if applicable):
This time extension extends the project to April 30, 2028.

Background:
Currently this project is in ROW Acquisition Phase. Our consultants have finished appraisals and negotiations. Next, we will be signing off on all negotiated values and recording the new right-of-way and easements and requesting notice to proceed to construction phase.

Summary:
As indicated in the background section, this project is close to completing the ROW Phase. This contract extension should see this project through Construction Phase.

Recommended Council Action:
Staff recommends the Council and Mayor approve the extension.

Attachments:
1. PIN 129828.00 Amendment 3 to Contract No 190346

STATE OF TENNESSEE
DEPARTMENT OF TRANSPORTATION
LOCAL PROGRAMS & COMMUNITY INVESTMENTS DIVISION
12TH FLOOR, WILLIAM R. SNODGRASS TOWER
312 ROSA L. PARKS AVENUE
NASHVILLE, TN 37243
(615) 741-2208

WILL REID
COMMISSIONER

BILL LEE
GOVERNOR

June 15, 2026

The Honorable Mary Esther Reed
Mayor, Town of Smyrna
315 South Lowery Street
Smyrna, TN 37167

Re: Florence Road, from Wade Herrod Road to Rebel Road in Smyrna
Smyrna, Rutherford County
PIN: 129828.00
Federal Project Number: STP-M-9315(12)
State Project Number: 75LPLM-F3-092
Agreement Number: 190346

Dear Mayor Reed:

Thank you for your letter dated May 4, 2026 requesting an extension. Based on the justification provided, we concur that an amendment is justified.

I am attaching an amendment to the original contract to this letter. The amendment extends the expiration date of the contract. Please review the amendment and advise me if it requires further explanation. If you find the amendment satisfactory, please execute it in accordance with all rules, regulations, and laws. Adobe Sign will then forward the document for the signature of the attorney for your agency. Once the amendment is fully executed Adobe Sign will email you a link to the fully executed amendment.

If you have any questions or need any additional information, please contact Robert Harris at 615-253-5880 or robert.harris@tn.gov.

Sincerely,

Mike Gilbert
Manager, Local Programs & Community Investments Division

Attachment

Amendment Number: 3

Agreement Number: 190346

Project Identification Number: 129828.00

Federal Project Number: STP-M-9315(12)

State Project Number: 75LPLM-F3-092

THIS AGREEMENT AMENDMENT is made and entered into this _____ day of _____, 20___ by and between the STATE OF TENNESSEE DEPARTMENT OF TRANSPORTATION, an agency of the State of Tennessee (hereinafter called the "Department") and the TOWN OF SMYRNA (hereinafter called the "Agency"), for the purpose of providing an understanding among the parties of their respective obligations related to the management of the project described as:

Florence Road, from Wade Herrod Road to Rebel Road in Smyrna

1. The language of Agreement # 190346 A1 dated March 21, 2025 Section B.2 a) is hereby deleted in its entirety.

2. The following is added as B.2 a) .

B.2 a) The Agency agrees to complete the herein assigned phases of the Project on or before **April 30, 2028**. If the Agency does not complete the herein described phases of the Project within this time period, this Agreement will expire on the last day of scheduled completion as provided in this paragraph unless an extension of the time period is requested by the Agency and granted in writing by the Department prior to the expiration of the Agreement. An extension of the term of this Agreement will be effected through an amendment to the Agreement. Expiration of this Agreement will be considered termination of the Project. The cost of any work performed after the expiration date of the Agreement will not be reimbursed by the Department.

All provisions of the original contract not expressly amended hereby shall remain in full force and effect.

IN WITNESS WHEREOF, the parties have caused this instrument to be executed by their respective authorized officials on the date first above written.

TOWN OF SMYRNA

By: _____ _____

Mary Esther Reed **Date**
Mayor

STATE OF TENNESSEE
DEPARTMENT OF TRANSPORTATION

By: _____ _____

Will Reid **Date**
Commissioner

APPROVED AS TO
FORM AND LEGALITY

By: _____ _____

Kyle Evans **Date**
Attorney

APPROVED AS TO
FORM AND LEGALITY

By: _____ _____

Leslie South **Date**
General Counsel

By: _____ _____

Steve Allen **Date**
Director, Local Programs
& Community Investments
Division

Town of Smyrna
Town Council Meeting
Agenda Summary

Agenda Item Number 5.i.
Department: Finance
Date: July 14, 2026

Subject:
Approval of the terms of, and authorization for the Mayor to execute, a one-year Professional Services Agreement with Rex Gaither for financial consulting services.

Fiscal Impact:
The contract is "not to exceed" $30,000. The actual anticipated amount is less than $15,000.

Contract Type:
Professional Services Contract

Contract Term (if applicable):
One Year

Background:
Rex Gaither retired as Finance Director & Assistant Town Manager in 2025. He had a 30+ year career with the town, serving 14 of those years in the capacity of Finance Director. Additionally, he filled the role of Assistant Town Manager for 6 years. His experience is an asset to the town.

Summary:
Rex will provide consisting services on topics ranging from purchasing, potential debt issuance, and balancing various utility financial metrics with large upcoming relocation projects.

Recommended Council Action:
Staff recommends that we take advantage of this offer.

Attachments:
1. 2026-27 Gaither Contract Employee Agreement

Contract Employee Agreement

This Contract Employee Agreement (the "Agreement") is made and entered into as of [Date], by and between the Town of Smyrna, a municipal corporation organized under the laws of the State of Tennessee, (hereinafter referred to as the "Town"), and Rex Gaither, CMFO, (hereinafter referred to as "Consultant").

1. Engagement of Services

The Town hereby engages the Consultant, and the Consultant hereby agrees to provide consultation and work services for the Town's Finance Department as outlined in this Agreement.

2. Scope of Services

The Consultant shall provide expert consultation and perform work concerning municipal finance for the Town's Finance Department. As a Certified Municipal Finance Officer (CMFO) for the State of Tennessee, the Consultant's responsibilities will include, but are not limited to, advising on financial planning, budget preparation, fiscal policy development, and compliance with state and federal financial regulations. The Consultant shall utilize their expertise to assist in optimizing the Town's financial operations and ensuring adherence to best practices in municipal finance management.

• Purpose:

o To provide part-time financial management, strategic advice, and continuity of operations

o To support transition and onboarding of a new Finance Director

• General Responsibilities:

o Advise on budget development and long-term financial forecasting

o Support capital planning and debt management

o Assist with special projects such as analyzing the insurance fund structure and issuing a banking services RFP

o Collaborate with the Utilities Director on financial matters such as ensuring the fee structure can support future growth

o Provide guidance and training on purchasing procedures

3. Nature of Relationship

The Consultant shall act as an independent contractor and not as an employee of the Town. As such, Consultant shall not be entitled to any of the benefits, including but not limited to Workers Compensation, Longevity, or other benefits afforded to Town employees, except those benefits Consultant may receive from previous retirement with the Town of Smyrna.

4. Compensation

Consultant shall be compensated at the rate of $125.00 per hour for services rendered under this Agreement. The total compensation shall not exceed $30,000 in any calendar year.

5. Availability and Schedule

Consultant agrees to be available for communications from Town staff, primarily the Town Manager, during regular Town work hours. The Consultant is not required to work onsite at Town Hall, except in instances required by the Town Manager or their designee to attend meetings, when the nature of the work necessitates their physical presence, or at the Consultant's preference.

6. Reporting

Consultant shall report directly to the Town Manager or designee, who will oversee the Consultant's duties and responsibilities under this Agreement.

7. Access to Town Systems and Use of Equipment

a. System Access and Equipment Provision

The Town shall provide the Consultant with access to its financial systems and an official Town-issued email account for the sole purpose of fulfilling the services described in this Agreement. Additionally, the Consultant will be issued a Town-owned laptop or other necessary equipment to carry out the scope of work.

b. Proper Use

The Consultant agrees to use all Town systems, accounts, and equipment solely for official business purposes related to this Agreement and in accordance with all applicable Town policies, procedures, and cybersecurity standards. Unauthorized use, access, sharing of login credentials, or misuse of Town systems or data is strictly prohibited and may result in termination of this Agreement and/or legal action.

c. Maintenance and Security

The Consultant is responsible for maintaining the physical and operational security of any Town-issued equipment while it is in their possession. The Consultant shall ensure that all reasonable measures are taken to prevent loss, theft, or damage, and shall immediately report any such incident to the Town.

d. Return of Property

Upon termination or expiration of this Agreement, or upon request by the Town, the Consultant shall promptly return all Town-issued equipment, system access credentials, and any other property belonging to the Town. The Consultant shall not retain or access any data, software, or proprietary information after the conclusion of the contract period.

e. Financial Responsibility

The Consultant agrees to be financially responsible for any loss, theft, or damage to Town-issued equipment caused by negligence, misuse, or failure to follow proper security protocols. The Town reserves the right to deduct the cost of such loss or damage from any amounts due to the Consultant or to seek reimbursement through other lawful means.

8. Term of Agreement

This Agreement shall commence on July 1, 2026, and continue until June 30, 2027, with a one-year renewal option agreed upon by both parties, unless terminated earlier in accordance with the provisions of this Agreement.

9. Termination

Either party may terminate this Agreement at any time, with or without cause, by providing written notice to the other party at least thirty (30) days prior to the intended termination date.

10. Confidentiality

Consultant agrees to keep confidential any and all information not subject to the Tennessee Open Records Act relating to the Town's business operations and will not disclose such information to any third party without the Town's prior written consent.

11. Governing Law

This Agreement shall be governed by and construed in accordance with the laws of the State of Tennessee.

12. Entire Agreement

This Agreement constitutes the entire understanding between the parties with respect to the subject matter hereof and supersedes all prior agreements and understandings, whether oral or written, relating to such subject matter.

IN WITNESS WHEREOF, the parties hereto have executed this Agreement as of the date first above written.

Town of Smyrna

By: _____
Name: Mary Esther Reed

Title: Mayor

Date: _____

Rex Gaither, CMFO

By: Rex A. Gaither
Name: Rex Gaither
Date: 6/15/2026

Town of Smyrna
Town Council Meeting
Agenda Summary

Agenda Item Number 5.j.
Department: Finance
Date: July 14, 2026

Subject:
Approval of and authorization of a list of items to be auctioned through online surplus sale with GovDeals.

Fiscal Impact:

Contract Type:

Contract Term (if applicable):

Background:
Consideration and authorization of a list of items to be auctioned through online surplus sale with GovDeals

Summary:
A list is attached of surplus items that need to be sold at auction. The list includes a seized vehicle, a fire safety house, and other items no longer needed. The Town seeks permission to conduct an online auction to sell surplus items. The auction will be advertised in the Murfreesboro Post, on the town's website and on Channel 3. All surplus items will be sold through GovDeals. If approved, the auction will be available online from July 21–28.

Recommended Council Action:
Staff seeks authorization to conduct an auction of approved items.

Attachments:
1. July - List of items for surplus form

List of items for surplus

Department	Items
Courts	Table with wood top
	Shredder on wheels
	Conference table
	Laminate table - legs flip style
	Laminate table - bound
Event Center	2 - Wood podiums
	2 - Stainless steel standing freezer
Fire	Surrey Fire Safety House
Judicial	Dell color printer/copier/fax machine
Parks	Toro 5 Gang Reel Mower
Police	8 - Airsoft pistols with magazines
	13 - Airsoft rifles
	8 - Batteries and chargers
	14 - Airsoft magazines
	Multiple Dell monitor stands
	Executive desk - wood
	Seized 2008 Nissan Altima
	Bookcase
Treasury	Filing cabinet - dark gray
	2 drawer end table - wood
	Filing cabinet - green metal
	Shelf - light gray
Utilities	Lazy Boy office chair
WSM	13 - Tap tees
	28 - CTS reducers

Town of Smyrna
Town Council Meeting
Agenda Summary

Agenda Item Number 5.k.
Department: Public Works
Date: July 14, 2026

Subject:
Approval of the terms of, and authorization for the Mayor to execute, a contract with the Greater Nashville Regional Council (GNRC) for transportation project planning services.

Fiscal Impact:
Not to exceed $50,000. Public Works, Engineering Services line item

Contract Type:
Original Contract

Contract Term (if applicable):
This work is anticipated to be complete within 3 months.

Background:
The Town has recently completed its Mobility Plan and Safe Streets for All Action Plan. Prioritizing these projects identified in these plans is necessary to ensure progress in improving our transportation network while aligning them with budget capacity. Town staff engaged GNRC through the Department of Transportation and Infrastructure to assist the Town on this project.

Summary:
GNRC will perform the work identified below, and attached herein, under a term contract. The contract is effective upon execution and will be for a six (6) term, with the option to renew for an additional six (6) months. A kick-off meeting will be held in early August. The Scope of Work includes the following tasks:

Task 1 (90 days). Quick Build and Operational Improvements: GNRC will identify short-term improvements or early phase work that can be made in advance of the longer-term projects. Quick builds or operational improvements provide an opportunity to address current needs while taking incremental steps towards the ultimate vision for a corridor. Recommendations will be presented in the form of maps and written guidance for linear phasing or segmentation of corridor improvements, spot improvements to address safety concerns or traffic bottlenecks, and small-scale upgrades to improve conditions for pedestrians and bicyclists. GNRC's recommendations will incorporate considerations for project cost, funding opportunities, design complexity, previously documented community support, ROW needs, facility ownership, and external agreements.

Task 2 (120 days). Project Prioritization Methods: GNRC will evaluate Smyrna's current project prioritization method to ensure that it 1) aligns with grant programs, 2) provides an opportunity for qualitative input from leaders and/or the public, and 3) incorporates quantitative metrics to help ensure that projects are prioritized based on unbiased assessment of community need. GNRC will benchmark its recommendations to its own regional prioritization process as well as, local governments from across Tennessee or the nation that are considered present-day or aspirational peers.

Recommended Council Action:
Staff recommends the Council approve the Mayor to sign this agreement.

Attachments:

1. GNRC-Smyrna Local Planning Assistance-Contract-LPA-27-3042-GNRC Signed (1)

CONTRACT LPA-27-3042
BETWEEN THE
TOWN OF SMYRNA MUNICIPAL GOVERNMENT
AND THE
GREATER NASHVILLE REGIONAL COUNCIL

This Contract, an interlocal agreement made pursuant to TCA § 12-9-101 et seq., by and between the Town of Smyrna Municipal Government ("CLIENT") and the Greater Nashville Regional Council ("GNRC"), is for the provision of Local Planning Assistance Services, as further defined in "Section A. Scope of Services." The CLIENT and GNRC may be referred to individually as a "Party" or collectively as the "Parties" to this Contract.

WHEREAS, the CLIENT is a member government of the Greater Nashville Regional Council (GNRC), a state development district established under TCA § 13-14-101, in part, to provide planning and economic development assistance to its members and the region; and

WHEREAS, the CLIENT is seeking technical assistance from the GNRC to accelerate and optimize the recommendations contained withing the 2025 Smyrna Mobility Plan which serves as an update to the town's Major Thoroughfare Plan and Bicycle and Pedestrian Plan; and

WHEREAS, the GNRC possesses the technical capabilities and professional staffing resources to assist the CLIENT as requested.

NOW THEREFORE, in consideration of the CLIENT'S fully paid membership dues to GNRC, as well as the mutual promises and covenants contained herein, and intending to be legally bound hereby, the Parties contract and agree as follows:

SECTION A. SCOPE OF SERVICES

GNRC agrees to provide, upon authorization from the CLIENT, the activities identified in the "Scope of Services" attached as Exhibit A and incorporated into this Contract.

SECTION B. TERM OF CONTRACT

The Parties agree that this Contract will be effective upon execution for the period of six months with an option to extend for an additional six months. The option to extend shall be exercised through a written addendum to this Contract signed by both parties. Neither party will have any obligation to the other for fulfillment of the Scope outside the Term.

SECTION C. PAYMENT TERMS AND CONDITIONS:

C.1. **Compensation**. The CLIENT agrees to pay GNRC a fixed fee of $50,000.00 for services described in Exhibit A to this Contract. The fee includes all applicable taxes, fees, overhead, costs of insurance, and all other direct or indirect costs incurred or to be incurred by GNRC.

C.2. **Progress Payments**. GNRC will submit to the CLIENT regular invoices for payment based on progress to date. The total cumulative value of progress payments shall not exceed

90 percent of the Compensation. Each invoice shall be accompanied by a narrative report describing work performed during the billing period, any difficulties encountered during the period, and the anticipated work to be performed during the next billing period. Invoices shall be submitted to the person(s) identified in D.2. or their designee.

C.3. **Final Payment**. GNRC will submit to the CLIENT an invoice for final payment following the completion of all work. The invoice shall be accompanied by a narrative report describing any work performed during the prior billing period and include reference to the file transfer of any required deliverables. The invoice for final payment shall be submitted to the party identified in D.2. or their designee.

SECTION D. STANDARD TERMS AND CONDITIONS:

D.1. **Required Approvals.** Neither party is bound by this Contract until it is signed by the Parties and, if necessary, approved by appropriate officials in accordance with any applicable laws and regulations or bylaws.

D.2. **Communications and Contacts.** All instructions, notices, consents, demands, or other communications required or contemplated by this Contract shall be in writing and shall be made by a nationally recognized overnight delivery service with an asset-tracking system, or by email with recipient confirmation. All communications, regardless of method of transmission, will be addressed to the respective Party at the appropriate mailing address.

CLIENT:
DAVID SANTUCCI, TOWN MANAGER
TOWN OF SMYRNA
315 SOUTH LOWRY STREET
SMRYNA, TN 37167
EMAIL: DAVID.SANTUCCI@TOWNOFSMYRNA.ORG
PHONE #: 615-267-5005

GNRC:
MICHAEL SKIPPER, EXECUTIVE DIRECTOR
GREATER NASHVILLE REGIONAL COUNCIL
44 VANTAGE WAY, SUITE 450
NASHVILLE, TN 37228
EMAIL: MSKIPPER@GNRC.ORG; CC: CONTRACTS@GNRC.ORG
PHONE # 615-880-3540

All instructions, notices, consents, demands, or other communications shall be considered effectively given upon receipt or recipient confirmation as may be required.

D.3. **Modification and Amendment.** This Contract may be modified only by a written amendment signed by all Parties to this Contract and approved by appropriate officials in accordance with applicable Tennessee laws and regulations, and the bylaws of the Parties.

D.4. **Termination for Convenience.** Either Party may terminate this Contract for convenience without cause for any reason upon 30 days' written notice before the termination date. A termination for convenience will not be deemed a breach of contract by either Party. GNRC will provide the CLIENT with any outstanding deliverables (in their then-current state) and records that exist prior to the termination date. During the 30-day notice period, GNRC will continue to work on in-progress Task Orders that can (in its reasonable judgment) be completed prior to the termination date. Termination will not affect payment due for Task Orders that are completed prior to or during the notice period. Task Orders that have been partially completed before the termination date will be payable at a proportional rate that reflects work done through the termination date.

D.5. **Termination for Cause.** If either Party fails to perform its obligations under this agreement in a timely or proper manner or violates any terms of this agreement, the non-breaching Party shall have the right to terminate the agreement, with termination effective upon receipt of notice.

D.6. **Assignment and Subcontracting.** GNRC will not assign this Contract or enter into a subcontract for any of the services provided under this Contract without the prior written approval of the CLIENT. Notwithstanding any use of the approved subcontractors, GNRC will be the prime contractor and remain responsible for compliance with all terms and conditions of this Contract. The CLIENT reserves the right to request additional information or impose additional terms and conditions before approving an assignment of this Contract in whole or in part or the use of subcontractors in fulfilling GNRC's obligations under this Contract.

D.7. **Conflicts of Interest.** GNRC agrees that no part of the total Contract amount shall be paid directly or indirectly to an employee or officials of the State of Tennessee as wages, compensation, or gifts in exchange for acting as an officer, agent employee, subcontractors, or consultant to the CLIENT in connection with any work contemplated or performed relative to this Contract.

D.8. **Nondiscrimination.** GNRC agrees that no person shall be excluded from participation in, be denied benefits of, or be otherwise subjected to discrimination in the performance of this Contract or in the employment practices of GNRC on the grounds of handicap and/or disability, age, race, color, religion, sex, national origin, or any other classification protected by Federal, Tennessee State constitutional, or statutory law. GNRC shall, upon request, show proof of such nondiscrimination and shall post in conspicuous places, available to all employees and applicants, notices of discrimination.

D.9. **Maintenance of Records.** GNRC will maintain documentation for all charges under this Contract, and any financial statements shall be prepared in accordance with generally accepted accounting principles. The books, records, and documents of GNRC for work performed or money received under this Contract will be maintained at least five years from the date of the final payment or termination of the Contract and shall be subject to review by CLIENT upon reasonable written notice. CLIENT acknowledges that certain governmental entities or organizations may require GNRC to maintain records according

to a different schedule, and CLIENT understands and agrees that records related to this Contract may be subject to review by the Comptroller of the Treasury or other persons or organizations.

D.10. Strict Performance. Failure by any Party to require, in any one or more cases, the strict performance of any of the terms, covenants, conditions, or provisions of this Contract will not be construed as a waiver or relinquishment of any term, covenant, condition, or provision. No term or condition of this Contract will be held to be waived, modified, or deleted except by a written amendment signed by the parties to this Contract.

D.11. Independent Contractor; No Third-Party Beneficiary. The Parties to this Contract will not act as employees, partners, joint venturers, or associates of one another. Nothing in this Contract will be construed to create an employer/employee relationship or to allow either Party to exercise control or direction over the manner or method by which the other transacts its business affairs or provides its usual services. The employees or agents of one Party are not the employees or agents of the other Party. There are no third-party beneficiaries to this Contract.

D.12. Tennessee Department of Revenue Registration. GNRC will comply with all applicable registration requirements contained in Tenn. Code Ann. §§ 67-6-601 – 608.

D.13. Suspension and Debarment. GNRC warrants that no part of the total Contract Amount shall be paid directly or indirectly to entities who are debarred or suspended, or otherwise excluded from or ineligible for participation in Federal assistance programs under Executive Order 12549 of February 18, 1986 (3 CFR, 1986 Comp., p. 189). GNRC will provide immediate written notice to the CLIENT if at any time it learns that there was an earlier failure to disclose information or that due to changed circumstances, its principals or the principals of its subcontractors are excluded or disqualified.

D.14. Lobbying. GNRC certifies, to the best of its knowledge and belief, that:

a. No federally appropriated funds have been paid or will be paid, by or on behalf of the undersigned, to any person for influencing or attempting to influence an officer or employee of an agency, a Member of Congress, an officer or employee of Congress, or an employee of a Member of Congress in connection with the awarding of any Federal contract, the making of any Federal grant, the making of any federal loan, the entering into of any cooperative agreement, and the extension, continuation, renewal, amendment, or modification of any federal contract, grant, loan, or cooperative agreement.

b. If any funds other than federally appropriated funds have been paid or will be paid to any person for influencing or attempting to influence an officer or employee of any agency, a Member of Congress, an officer or employee of Congress, or an employee of a Member of Congress in connection with is grant, loan, or cooperative agreement, GNRC shall complete and submit Standard Form-LLL, "Disclosure Form to Report Lobbying," in accordance with its instructions.

c. GNRC shall require that the language of this certification be included in the award documents for all sub-awards at all tiers (including sub-grants, subcontracts, and contracts under grants, loans, and cooperative agreements) and that all subrecipients of federally appropriated funds shall certify and disclose accordingly.

This certification is a material representation of fact upon which reliance was placed when this transaction was made or entered into and is a prerequisite for making or entering into this transaction imposed by Section 1352, title 31, *U.S. Code*.

D.15. Insurance. GNRC will carry adequate liability and other appropriate forms of insurance, including worker compensation insurance when required by law.

D.16. Ownership of Deliverables. Provided GNRC has been fully paid for its services, the CLIENT Deliverables created by GNRC as part of the Scope of Services are the property of CLIENT unless otherwise provided for in writing by the CLIENT. "Deliverables" includes without limitation forms, documents, written information, reports, background check documentation, or exhibits produced by GNRC for the CLIENT in the performance of the Scope of Services of this Contract. After completion or termination of the Contract and upon written request by the CLIENT, GNRC will provide to the CLIENT any Deliverables that have not been previously transmitted to the CLIENT. Notwithstanding anything in this paragraph to the contrary, however, GNRC may keep copies of Deliverables and any other records in order to fulfill its obligations under public records laws, grant monitoring agreements, or other obligations of law or contract.

D.17. Intellectual Property and Other Property Rights. GNRC may develop certain materials, tools, applications, or processes (collectively "Tools") to assist it in carrying out the Scope of Services. GNRC is and shall be, the sole and exclusive owner of the Tools as well as the owner of all right, title, and interest throughout the world in and to all the Tools, together with the results of and proceeds from any patents, copyrights, trademarks, trade secrets and other intellectual property rights (collectively "Intellectual Property Rights") created by GNRC or its employees and agents in whatever stage of completion such may exist. CLIENT expressly disclaims any right to any Tools or Intellectual Property Rights of GNRC.

D.18. Iran Divestment Act. The requirements of T.C.A. § 12-12-101 et seq., addressing contracting with persons with investment activities in Iran, shall be a material provision of this Contract. GNRC agrees, under penalty of perjury, that to the best of its knowledge and belief that it is not on the list created pursuant to T.C.A. § 12-12-10.

D.19. Boycott of Israel. GNRC certifies that it is not currently engaged in, and covenants that it will not, for the duration of the Agreement, engage in a Boycott of Israel, as that term is defined in T.C.A. § 12-4-119.

D.20. Cost Sharing Allowance. The CLIENT understands that this contract is part of a regional cost sharing program created for and funded by participating member governments. Revenue from this contract may be pooled with funding provided by other member governments seeking similar services. Further, the CLIENT understands funding

provided to GNRC by the CLIENT as a result of this contract may be used to satisfy non-federal matching requirements of associated state and federal grant programs which are made available by GNRC to share in the costs of delivering or supplementing the scope of services.

D.21. Force Majeure. The obligations of the Parties are subject to prevention by causes beyond the parties' control that could not be avoided by the exercise of due care including, but not limited to, natural disasters, riots, wars, epidemics, or any other similar cause.

D.22. State and Federal Compliance. The Parties will comply with all applicable State and Federal laws and regulations in the performance of this Contract.

D.23. Governing Law. This Contract will be governed by and construed in accordance with the laws of the State of Tennessee. The Parties agree that they will be subject to the exclusive jurisdiction of the courts of the State of Tennessee in actions that may arise under this Contract. Each Party hereby irrevocably consents to the exclusive jurisdiction and venue of the state or federal courts located within Davidson County.

D.24. Entire Agreement. This Contract is complete and contains the entire understanding between the Parties relating to its subject matter, including all the terms and conditions of the Parties' agreement. This Contract supersedes any and all prior understandings, representations, negotiations, and agreements between the Parties, whether written or oral.

D.25. Severability. If any terms and conditions of this Contract are held to be invalid or unenforceable as a matter of law, the other terms and conditions of this Contract will not be affected and will remain in full force and effect. The terms and conditions of this Contract are severable.

D.26. Headings. Section headings of this Contract are for reference purposes only and will not be construed as part of this Contract.

D.27. Incorporation of Additional Documents. Each of the following documents are included as a part of this Contract by reference. In the event of a discrepancy or ambiguity regarding GNRC's duties, responsibilities, and performance under this Contract, these items will govern in order of precedence below:

a. any amendment to this Contract, with the latter in time controlling over any earlier amendments;
b. this Contract with attachments;
c. 2025 Smyrna Mobility Plan

[REMAINDER OF THIS PAGE LEFT BLANK]

AGREED,

GREATER NASHVILLE REGIONAL COUNCIL



7/9/2026

MICHAEL SKIPPER, EXECUTIVE DIRECTOR DATE

TOWN OF SMYRNA MUNICIPAL GOVERNMENT

DAVID SANTUCCI, TOWN MANAGER DATE

Exhibit A
Scope of Services

A1. BACKGROUND

The Town of Smyrna Municipal Government (CLIENT) is a local government member of the Greater Nashville Regional Council (GNRC) which was established under TCA § 13-14-101 as a state development district, in part, to provide planning and economic development assistance to its members and the region as a whole. The CLIENT has requested technical assistance from GNRC to accelerate and optimize the recommendations contained within the *Smyrna Mobility Plan* which serves as an update to the town's Major Thoroughfare Plan and Bicycle and Pedestrian Plan. GNRC will provide the services described in Section A2. The CLIENT will provide relevant documents to GNRC, as requested, to include, but not be limited to, the *Smyrna Mobility Plan*, *Safe Streets and Roadways for All Safety Action Plan*, local traffic studies, and the most recent five-year roadway capital Improvement plan/program.

A2. WORK TASKS

Task 1. Quick Build and Operational Improvements: GNRC will identify short-term improvements or early phase work that can be made in advance of the longer-term projects. Quick builds or operational improvements provide an opportunity to address current needs while taking incremental steps towards the ultimate vision for a corridor. Recommendations will be presented in the form of maps and written guidance for linear phasing or segmentation of corridor improvements, spot improvements to address safety concerns or traffic bottlenecks, and small-scale upgrades to improve conditions for pedestrians and bicyclists. GNRC's recommendations will incorporate considerations for project cost, funding opportunities, design complexity, previously documented community support, ROW needs, facility ownership, and external agreements.

Schedule and Level of Effort

- *The budget includes approximately 330 hours of staff time for Task 1. Project kickoff is assumed to occur in early August with a first draft of deliverables presented to the CLIENT for review and comment within 90 days of project kickoff. Microsimulation modeling of proposed quick build recommendations may not be available within the first 90 days given the need for local involvement in model calibration.*

Deliverables:

- *Technical Memo on Quick Build Recommendations*

Task 2. Project Prioritization Methods: GNRC will evaluate Smyrna's current project prioritization method to ensure that it 1) aligns with grant programs, 2) provides an opportunity for qualitative input from leaders and/or the public, and 3) incorporates quantitative metrics to help ensure that projects are prioritized based on unbiased assessment of community need. GNRC will benchmark its recommendations to its own regional prioritization process as well as

local governments from across Tennessee or the nation that are considered present-day or aspirational peers.

Schedule and Level of Effort

- *The budget includes approximately 145 hours of staff time for Task 2. Project kickoff is assumed to occur in early August with a first draft of deliverables presented to the CLIENT for review and comment within 120 days of project kickoff.*

Deliverables:

- *Technical Memo on Project Prioritization Methods*

A3. BUDGET ASSUMPTIONS

The contract budget includes the following costs:

- GNRC staffing and administrative fees to perform tasks, prepare deliverables, and attend/participate in up to 2 public meetings,
- General office printing and project-related supplies,
- Small-batch printing of project-related materials,
- Local mileage for GNRC project personnel,
- All the necessary software tools to perform the scope of services, and
- Equipment and supplies for conducting fieldwork, site visits, or CLIENT meetings.

The contract fee does not include costs for the following activities:

- Fees associated with facilities used for project meetings or public workshops,
- Large quantity printings and publications of final deliverables resulting from the contract, or
- Any third-party vendors or consultants hired separately by the CLIENT for related work.

Town of Smyrna
Town Council Meeting
Agenda Summary

Agenda Item Number 6.a.
Department: Legal
Date: July 14, 2026

Subject:
PUBLIC HEARING: Consideration of an Ordinance amending Smyrna Municipal Code Title 20, Chapter 2, relative to the possession of firearms in town parks, as well as amendments to Title 11, Chapter 6, relative to the discharge of firearms while lawfully hunting.

Fiscal Impact:
N/A

Contract Type:

Contract Term (if applicable):

Background:
The Smyrna Municipal Code bans the possession of firearms in any park, which was previously allowed under Tennessee law. However, a judicial ruling recently held that the state statutes previously used to restrict firearms in parks and the "intent to go armed" were unconstitutional.
The Smyrna Municipal Code bans the discharge of firearms within municipal limits. A recent statutory change prevents municipalities from regulating the discharge of firearms in the course of lawful hunting, but allows municipalities to ban any discharge of firearms within 500 feet of school property.

Summary:
This update to the Municipal Code accomplishes two things:
(1). Aligns the Municipal Code with the current state of the law regarding possession of firearms in municipal parks, and
(2). It amends portions of the municipal code that prohibit the discharge of firearms within the city while lawfully hunting, which are now preempted by and impermissible under Tennessee law, while also opting into a statutory exception prohibiting the discharge of firearms within 500 feet of school property.
NOTE: . Notwithstanding the above-referenced Code amendments, anyone discharging a firearm, even when doing so while lawfully hunting, must not do so in a reckless manner that places or may place another person in imminent danger of death or serious

bodily injury. See Tenn. Code Ann. § 39-13-103; see also Op. Tenn. Att'y Gen. 98-038 (Feb. 9, 1998), Op. Tenn. Att'y Gen. 10-102 (Oct. 1, 2010). Thus, officers may enforce statutes and ordinances prohibiting unlawful conduct such as assault, aggravated assault, and reckless endangerment, even when the conduct arises from otherwise lawful hunting activities. See Tenn. Code Ann. §§ 39-13-101 - 103

Recommended Council Action:
Staff recommends council approval.

Attachments:
1. Ordinance #26-31
2. Title 11 Sections 601-2 redline
3. Title 20 Firearm Discharge redline

TOWN OF SMYRNA, TENNESSEE
ORDINANCE NO. 26- 31

AN ORDINANCE relative to the amendment of the Town of Smyrna Municipal Code, Title 20 "Miscellaneous", Chapter 2 “Parks and Recreation Department”, Section 20-206 "Park Rules and Regulations” relative to firearm possession in parks and Title 11 “Municipal Offenses”, Chapter 6 “Firearms, Weapons, and Missiles” Sections 11-601 and 11-602 relative to the discharge of firearms while lawfully hunting within the Town of Smyrna.

WHEREAS, in accordance with the Charter of the Town of Smyrna, Tennessee, Article 2, Section 2.01(o), Town Council shall have the power to [e]stablish, open, relocate, vacate, alter, widen, extend, grade, improve, repair, construct, reconstruct, maintain, light, sprinkle and clean public highways, streets, boulevards, parkways, sidewalks, alleys, parks, public grounds, public facilities, libraries and squares, wharves, bridges, viaducts, subways, tunnels, sewers and drains within or without the corporate limits, regulate their use within or without the corporate limits, assess fees for the use of or impact upon such property and facilities, and take and appropriate property therefor under the provisions provided by the general laws of the state;

WHEREAS, in accordance with the Charter of the Town of Smyrna, Tennessee, Article 2, Section 2.01(v), Town Council shall have the power to [d]efine, prohibit, abate, suppress, prevent and regulate all acts, practices, conduct, business, occupations, callings, trades, use of property and all other things whatsoever detrimental, or liable to be detrimental, to the health, morals, comfort, safety, convenience or welfare of the inhabitants of the municipality, and exercise general police powers;

WHEREAS, in accordance with the Charter of the Town of Smyrna, Tennessee, Article 2, Section 2.01(ff), Town Council shall have the power to plan for the orderly development of the community, including economic, physical, educational and cultural aspects, and to institute programs to effectuate such plans; and

WHEREAS, in accordance with the Charter of the Town of Smyrna, Tennessee, Article 2, Section 2.01(ii), Town Council shall have the power to exercise and have all other powers, functions, rights, privileges and immunities granted by general law or necessary or desirable to promote or protect the safety, health, peace, security, good order, comfort, convenience, morals, and general welfare of the town and its inhabitants, and all implied powers necessary to carry into execution all powers granted in the Charter of the Town of Smyrna, Tennessee.

BE IT ORDAINED BY THE TOWN COUNCIL OF THE TOWN OF SMYRNA:

Section 1. That Town of Smyrna Municipal Code, Title 20 "Miscellaneous", Chapter 2 “Parks and Recreation Department”, Section 20-206 "Park Rules and Regulations” relative to firearm possession in parks and Title 11 “Municipal Offenses”, Chapter 6 “Firearms, Weapons, and Missiles” Sections 11-601 and 11-602 relative to the discharge of firearms while lawfully hunting within the Town of Smyrna shall be provided in the Code as appearing in Exhibit “A” attached hereto and incorporated herein by reference as if set forth at length verbatim, the health

and welfare of the Town of Smyrna requiring it.

Section 2. This ordinance shall take effect immediately upon its adoption on second and final reading, the public health and welfare of the Town of Smyrna requiring it.

PASSED on first reading by the Town Council the ____ day of _____, 2026.

PASSED on second reading by the Town Council the ____ day of _____, 2026.

TOWN OF SMYRNA, TENNESSEE

_____
MARY ESTHER REED, Mayor

ATTEST:

_____
AMBER HOBBS, Town Clerk

§ 11-601 AIR RIFLES AND THE LIKE.

(1) (a) It shall be unlawful for any person in the town to discharge any air gun, air pistol, air rifle, "BB" gun, paintball gun, or sling shot capable of discharging a metal, plastic, or any other kind of material, bullet, or pellet, whether propelled by spring, compressed air, expanding gas, explosive, or other force-producing means or method in a reckless manner.

(b) For purposes of this section only, "reckless" shall refer to a person who is aware of but consciously disregards a substantial and unjustifiable risk of harm to person or property.

(2) Sporting events utilizing such items as listed in division (1) above shall be an exception to the prohibitions in division (1) above, if such sporting events are in a contained area and have been approved in advance by the Chief of Police.

~~(3) It shall be unlawful to discharge any item listed in division (1) above from or across any street, alley, public way, or railroad right-of-way. It shall be unlawful to discharge or possess any item listed in division (1) above in any municipal building or in any municipal park, except as approved in writing under terms and conditions set forth by the Town Manager.~~

(2007 Code, § 11-601)

Cross reference(s)—Penalty, see § 11-603

§ 11-602 DISCHARGE OF FIREARM WITHIN TOWN PROHIBITED.

It shall be unlawful for any ~~unauthorized~~ person to discharge a firearm within ~~the town~~ five hundred (500) feet of school property.

(2007 Code, § 11-603)

Cross reference(s)—Penalty, see § 11-603

§ 20-206 PARK RULES AND REGULATIONS.

(1) The Director as prescribed by Department's rules and regulations as approved by the Town Manager shall have the power to limit use of the town's recreational facilities for any user in violation of said rules and regulations and/or established codes of conduct for users, coaches, parents, players, vendors, or groups. Any sanctions issued by the Director are subject to approval of the Town Manager. The Parks and Recreation Department rules and regulations, as provided by Ord. 99-27, may be amended by the Town Council pursuant to recommendations of the Parks and Recreation Director and the Parks Advisory Board.

(2) No person shall, without permission from the Park's Director, in any park:

(a) Distribute, display, or construct any material for advertising purposes (except for team sponsorship signs approved by the Director of Parks and Recreation);

(b) Solicit contributions for any purpose or do any vending (without permission of the Director of Parks and Recreation);

(c) Camp or erect or maintain a tent or shelter or build a campfire;

(d) Disobey the lawful and reasonable order of a park employee in the discharge of his or her duties or disobey the notices, prohibitions, instructions, or directions on any park sign;

(e) Use threatening, abusive, or insulting language;

(f) Do any obscene or indecent act;

(g) Throw, cast, or propel stones or other missiles;

(h) Interfere with, encumber, obstruct, or render dangerous any part of the park;

(i) Climb or lie upon any well, fence, shelter, monument, or other structure not meant for such;

(j) Do any act amounting to a breach of peace;

(k) Enter or leave any park facility except at established entrance ways or exits or at established times;

(l) Use or gain admittance to the facilities in the park for the use of which a charge is made without paying the charge;

(m) Bring in, have possession of, or partake of any alcoholic beverage;

(n) Engage in, instigate, or encourage a fight;

(o) Do, aid, abet, or assist in doing any act injurious to any person, animal, or property within the park;

(p) Bring into or have in his or her possession in any park any ~~firearms,~~ slingshots, fireworks, explosives, or illegal~~dangerous~~ weapons; or otherwise be in violation of current Tennessee law pertaining to firearms.

(q) Engage in gambling;

(r) Deposit any rubbish of any sort except in receptacles provided for refuse;

(s) Spit upon any walk, floor, building, or structure;

(t) Throw, cast, drop, or discharge into or leave in the waters in/or adjacent to any park any substance which may result in the pollution of such waters;

(u) Destroy, injure, disturb, or remove any growing thing, including but not limited to, any plant, flower, shrub, or tree;

(v) Injure, deface, displace, remove, fill in, raise, destroy, or tamper with any drive, walk, bridge, wall, fence, shelter, seat, monument, building, post, sign, railing, platform, telephone, recreation equipment, pipe, basin, or any property, real or personal, owned by the town;

(w) Park or drive in any areas other than designated parking areas;

(x) Create inappropriate loud noise or music that may disrupt the leisure atmosphere within the parks; or

(y) Violate any other town, state, or federal law or ordinance.

(2007 Code, § 20-206)

Cross reference(s)—Penalty, see § 20-208

Town of Smyrna
Town Council Meeting
Agenda Summary

Agenda Item Number 6.b.
Department: Planning
Date: July 14, 2026

Subject:
PUBLIC HEARING: Consideration of an Ordinance amending the text of the Smyrna Municipal Zoning Ordinance Article III, Section 3.100 regarding detached accessory structures.

Fiscal Impact:

Contract Type:

Contract Term (if applicable):

Background:
This Zoning Ordinance amendment was discussed at the last joint meeting of the Town Council and Planning Commission. The attached amendment was created based on that discussion and subsequent research by staff.

Summary:
This amendment would amend Article III, Section 3.100 Accessory Use Regulations to do several things. The maximum square footage allowed for detached accessory structures would be increased for most lot sizes. The area calculation would now include all floors rather than only the ground floor. The maximum height and size allowed for a structure would be tied to the height and size of the principal structure, so that no accessory structure is taller or larger than the principal structure. The maximum building footprint would also be tied to the maximum lot coverage that is already within the Zoning Ordinance. The language to be removed is struck-through in red, and the new language is highlighted in yellow. We have also included examples showing the maximum detached structure size for the various lot sizes on real world lots that lie within those ranges.

The Planning Commission reviewed this amendment and recommended approval 4 for, 0 against.

Recommended Council Action:

Staff recommends approval.

Attachments:

1. Ordinance #26-32- Article III accessory use
2. Detached Accessory Structures June 2026 (2)

TOWN OF SMYRNA, TENNESSEE
ORDINANCE NO. 26-32

AN ORDINANCE relative to the amendment of Town of Smyrna Municipal Zoning Ordinance to amend Article III, Section 3.100 regarding accessory use regulations.

WHEREAS, in accordance with the Charter of the Town of Smyrna, Tennessee, Article 2, Section 2.01(22), Town Council shall have the power to define, prohibit, abate, suppress, prevent and regulate all acts, practices, conduct, business, occupations, callings, trades, use of property and all other things whatsoever detrimental, or liable to be detrimental, to the health, morals, comfort, safety, convenience or welfare of the inhabitants of the municipality, and exercise general police powers; and

WHEREAS, in accordance with the Charter of the Town of Smyrna, Tennessee, Article 2, Section 2.01(32), Town Council shall have the power to Plan for the orderly development of the community, including economic, physical, educational and cultural aspects, and to institute programs to effectuate such plans; and

WHEREAS, in accordance with the Charter of the Town of Smyrna, Tennessee, Article 2, Section 2.01(35), Town Council shall have the power to exercise and have all other powers, functions, rights, privileges and immunities granted by general law or necessary or desirable to promote or protect the safety, health, peace, security, good order, comfort, convenience, morals, and general welfare of the town and its inhabitants, and all implied powers necessary to carry into execution all powers granted in the Charter of the Town of Smyrna, Tennessee; and

WHEREAS, the Planning Commission has recommended this amendment to the Town of Smyrna Zoning Ordinance based upon its review; and

WHEREAS, the amendment is in agreement with the general plan for the Town; and

WHEREAS, it has been determined that the legal purposes for which zoning exists are not breached by the amendment; and

WHEREAS, it has been determined that there will not be an adverse effect upon any adjoining property owners and/or any such adverse effect is justified by the overwhelming public good or welfare; and

WHEREAS, it has been determined that no one property owner or small group of property owners will benefit materially from the change to the detriment of the general public.

BE IT ORDAINED BY THE TOWN COUNCIL OF THE TOWN OF SMYRNA:

Section 1. That the Town of Smyrna Municipal Zoning Ordinance, Article III, Section 3.100, regarding accessory use regulations, be and hereby is amended as specified in Exhibit "A"

attached hereto and incorporated herein by reference as if set forth at length verbatim, the health and welfare of the Town of Smyrna requiring it.

Section 2. This ordinance shall take effect immediately upon its adoption on second and final reading, the public health and welfare of the Town of Smyrna requiring it.

PASSED on first reading by the Town Council the ____ day of _____, 2026.

PASSED on second reading by the Town Council the ____ day of _____, 2026.

TOWN OF SMYRNA, TENNESSEE

_____
MARY ESTHER REED, Mayor

ATTEST:

_____
AMBER HOBBS, Town Clerk

Detached Accessory Buildings

This amendment seeks to modify the existing accessory use regulations within the Municipal Zoning Ordinance to align with discussion resulting from the quarterly joint Town Council and Planning Commission meetings. The images following the proposed ordinance amendments are for illustrative purposes only and are not a part of the proposed amendments. These images demonstrate the maximum allowable scale of a single story accessory structure for each of the six designated lot size ranges under the proposed amendments.

This proposed Ordinance would make several modifications:

- Allowances: Increase the maximum square footage for detached accessory structures
- Floor Area Calculations: Shift to a cumulative square footage calculation where every floor of an accessory structure counts towards the total allowance. The current regulations only take into account the ground floor area.
- Height: Establishing a maximum height restriction tied to the height of the principal structure.
- Square Footage Cap: Mandates the cumulative floor area of all detached structures are subordinate to the principal structure.
- Buildable Area: Depending on lot size, a maximum lot coverage percentage may be built upon taking into account the ground floor area only.

The proposed text to be removed is red and struck-through with new language highlighted in yellow.

3.100 Accessory Use Regulations.

E. Detached accessory structures are allowed in residential districts as follows, whether for one structure or multiple structures:

~~1. For parcels up to 15,000 square feet, the maximum size shall be 600 square feet.~~

~~2. For parcels greater than 15,000 square feet up to 1 acre, the maximum size shall be 800 square feet. For parcels greater than 1 acre up to 3 acres, the maximum size shall be 1,200 square feet.~~

~~3. For parcels greater than 3 acres up to 5 acres, the maximum size shall be 1,500 square feet.~~

~~4. For parcels greater than 5 acres, the maximum size shall be 2,400 square feet.~~

~~5.~~ 1. For purposes of the square footage calculations listed ~~above~~ in the table below, ~~only the footprint of the structure~~ the total aggregate floor area of the structure shall be included. In the cases of a structure with more than one floor as defined by the Building Code, ~~the upper floor will not be counted for purposes of this provision~~ every level (above or below grade) shall be counted individually toward the total calculation.

2. The peak of any detached accessory structure shall not exceed the maximum peak roof height of the principal structure or the maximum height as listed in the table below, whichever is more restrictive. In the event the principal structure is a

single story, the detached structure may exceed the height of the principal structure, but shall not exceed 18 feet to the peak of the roof.

3. Total combined gross floor area of all detached accessory structures shall not exceed the total gross floor area of the principal structure (inclusive of all floors).
4. The area occupied by all buildings, including accessory structures, shall not exceed 30% or 35% of the total area of a parcel in accordance with the table below.

Lot Size	Maximum Square Footage	Maximum Height
< 10,000 Square Feet	600 Square Feet *	20 Feet ***
10,001 - 14,999 Sq. Ft.	800 Square Feet **	20 Feet ***
15,000 Sq. Ft. - 0.49 Ac	1,200 Square Feet **	20 Feet ***
0.5 Acre - 1.99 Acres	1,500 Square Feet **	25 Feet ***
2 Acres - 4.99 Acres	2,500 Square Feet **	30 Feet ***
> 5 Acres	3,500 Square Feet **	35 Feet ***
Agriculture Use	Exempt	Exempt
The total square footage of all levels of every detached accessory structure on the lot must be less than or equal to the total square footage of the main house.		
* The area occupied by all buildings, including accessory structures, shall not exceed 30% of the total area of the parcel. ** The area occupied by all buildings, including accessory structures, shall not exceed 35% of the total area of a parcel. Where the lot coverage requirements of this section conflict with those found elsewhere in the Zoning Ordinance, the more restrictive provision shall apply.		
*** Structures shall not exceed the maximum peak roof height of the principal structure or the maximum height in this table, whichever is more restrictive. In the event the principal structure is a single story, the detached structure may exceed the height of the principal structure, but shall not exceed 18 feet to the peak of the roof.		


20' X 30'
600 SQUARE FEET
7,151 SQUARE FOOT LOT
30% LOT COVERAGE MAXIMUM
HANWORTH TRCE
6650
6652
6654
6656
6658
CARANNA CT


20' X 40'
800 SQUARE FEET
11,809 SQUARE FOOT LOT
35% LOT COVERAGE MAXIMUM
133
131
129
109
111
113
115
117
127
JOELLA DR
110
112
114
116


30' x 40'
1,200 SQUARE FEET
16,345 SQUARE FOOT LOT
35% LOT COVERAGE MAXIMUM
206
202
132
128
313
124
309
131
120
BANKSIDE DR
127
116
305
123
112
JERICHO ST
306

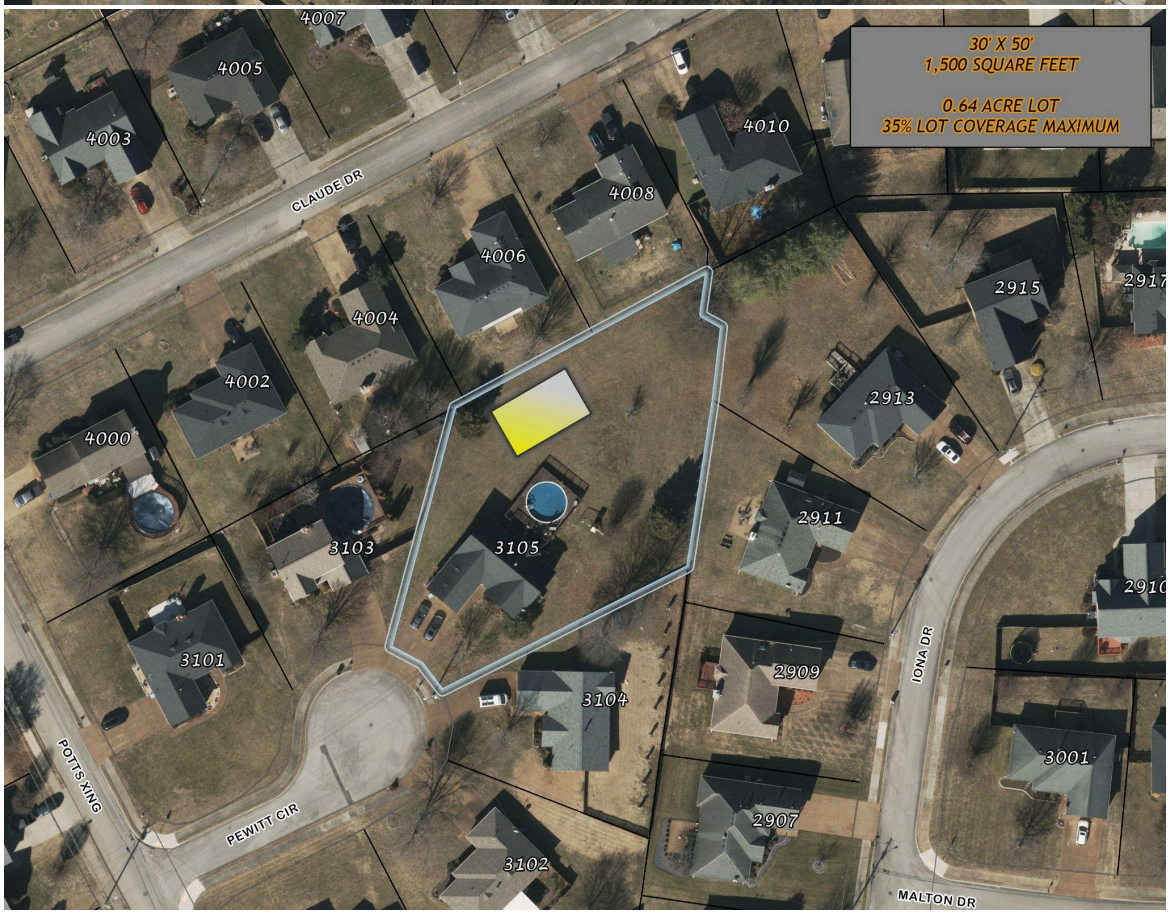
30' X 50'
1,500 SQUARE FEET
0.64 ACRE LOT
35% LOT COVERAGE MAXIMUM
4007
4005
4003
4010
CLAUDE DR
4008
4006
2915
4004
4002
2913
4000
2911
3103
3105
3101
2909
3104
IONA DR
3001
POTTS XING
PEWITT CIR
2907
3102
MALTON DR


50' X 50'
2,500 SQUARE FEET
2.53 ACRE LOT
35% LOT COVERAGE MAXIMUM
4038
4174
4250
ROCK SPRINGS RD
103
99
DALE DR


50' X 70'
3,500 SQUARE FEET
5.98 ACRE LOT
35% LOT COVERAGE MAXIMUM
5414
5370
5300
5230
5182
ROCK SPRINGS RD

Town of Smyrna
Town Council Meeting
Agenda Summary

Agenda Item Number 6.c.
Department: Planning
Date: July 14, 2026

Subject:
PUBLIC HEARING: Consideration of an Ordinance amending the text of the Smyrna Municipal Zoning Ordinance Article IV, Section 4.030 regarding mobile food vendors.

Fiscal Impact:

Contract Type:

Contract Term (if applicable):

Background:
This Zoning Ordinance amendment was discussed at the last joint meeting of the Town Council and Planning Commission. The attached amendment was created based on that discussion and subsequent research by staff.

Summary:
This amendment would amend Article IV, Section 4.030 G. Mobile Food Vendors. Currently, such vendors are required to get an annual permit but are restricted to only 40 days in a calendar year at any one location. They also must leave every night and can set up on property zoned C-2 and C-3.

The proposed amendments would limit such uses to property zoned C-2 and the permit would be issued for up to 30 days. The requirement to leave at the end of the day would be removed. A single location could be utilized for no more than 90 days in any calendar year. The owner of a property where a mobile food vendor wishes to set up would also be required to get a separate permit which would be valid for not more than 90 days in any calendar year. This is similar to the requirement for a property owner to obtain a permit for any transient vendor to locate on their property. The language to be removed is struck-through in red, and the new language is highlighted in yellow.

The Planning Commission reviewed this amendment and recommended approval 4 for, 0 against.

Recommended Council Action:
Staff recommends approval.

Attachments:
1. Ordinance #26-33- Article IV mobile food vendors
2. Mobile Food Vendor Permits June 2026

TOWN OF SMYRNA, TENNESSEE
ORDINANCE NO. 26-33

AN ORDINANCE relative to the amendment of Town of Smyrna Municipal Zoning Ordinance to amend Article IV, Section 4.030.G regarding mobile food vendors.

WHEREAS, in accordance with the Charter of the Town of Smyrna, Tennessee, Article 2, Section 2.01(22), Town Council shall have the power to define, prohibit, abate, suppress, prevent and regulate all acts, practices, conduct, business, occupations, callings, trades, use of property and all other things whatsoever detrimental, or liable to be detrimental, to the health, morals, comfort, safety, convenience or welfare of the inhabitants of the municipality, and exercise general police powers; and

WHEREAS, in accordance with the Charter of the Town of Smyrna, Tennessee, Article 2, Section 2.01(32), Town Council shall have the power to Plan for the orderly development of the community, including economic, physical, educational and cultural aspects, and to institute programs to effectuate such plans; and

WHEREAS, in accordance with the Charter of the Town of Smyrna, Tennessee, Article 2, Section 2.01(35), Town Council shall have the power to exercise and have all other powers, functions, rights, privileges and immunities granted by general law or necessary or desirable to promote or protect the safety, health, peace, security, good order, comfort, convenience, morals, and general welfare of the town and its inhabitants, and all implied powers necessary to carry into execution all powers granted in the Charter of the Town of Smyrna, Tennessee; and

WHEREAS, the Planning Commission has recommended this amendment to the Town of Smyrna Zoning Ordinance based upon its review; and

WHEREAS, the amendment is in agreement with the general plan for the Town; and

WHEREAS, it has been determined that the legal purposes for which zoning exists are not breached by the amendment; and

WHEREAS, it has been determined that there will not be an adverse effect upon any adjoining property owners and/or any such adverse effect is justified by the overwhelming public good or welfare; and

WHEREAS, it has been determined that no one property owner or small group of property owners will benefit materially from the change to the detriment of the general public.

BE IT ORDAINED BY THE TOWN COUNCIL OF THE TOWN OF SMYRNA:

Section 1. That the Town of Smyrna Municipal Zoning Ordinance, Article IV, Section 4.030.G, regarding mobile food vendors, be and hereby is amended as specified in Exhibit "A"

attached hereto and incorporated herein by reference as if set forth at length verbatim, the health and welfare of the Town of Smyrna requiring it.

Section 2. This ordinance shall take effect immediately upon its adoption on second and final reading, the public health and welfare of the Town of Smyrna requiring it.

PASSED on first reading by the Town Council the ____ day of _____, 2026.

PASSED on second reading by the Town Council the ____ day of _____, 2026.

TOWN OF SMYRNA, TENNESSEE

_____
MARY ESTHER REED, Mayor

ATTEST:

_____
AMBER HOBBS, Town Clerk

Mobile Food Vendors

This amendment seeks to modify the existing Mobile Food Vendor regulations within the Municipal Zoning Ordinance to align with discussion resulting from the quarterly joint Town Council and Planning Commission meetings. Mobile food vendors, under the present Ordinance, may sell from any property zoned C-2 or C-3 provided they leave the site nightly and do not conduct sales from any one location for more than 40 days per calendar year. Permits are also issued on a calendar year basis to the mobile food vendors.

This proposed Ordinance would make several modifications:

- Locations of Sales: Sales would be restricted to the C-2 district only, a removal of the option for sales to be conducted in the C-3 district due to lot size constraints.
- Permitting: The annual permit would be replaced by a 30 day permit. Mobile food vendors may operate all year, provided they maintain a valid and current permit. Permits are valid for one location.
- Overnight: The requirement of vendors to leave the premises nightly would be removed. Vendors may occupy one location during the extent of their 30 day permit provided all codes and safety requirements are met.
- Property Owner Permits: Similar to the transient vendor ordinance, property owners in C-2 zones must obtain a separate Property Owner Permit to host mobile food vendors, which will be required prior to any sales or display conducted on site.
- Limits: No single property owner may host a mobile food vendor for more than 90 days per calendar year.
- Enforcement: Any violation of the Zoning Ordinance or Municipal Code by a vendor may result in a citation issued to the property owner.

The proposed text to be removed is red and struck-through with new language highlighted in yellow.

4.030 Temporary Use Regulations.

G. Mobile Food Vendors

1. Definitions.

o. Property Owner permit means a permit issued by the Town to a property owner authorizing use of their real property for the operation, display, or sales activities of a mobile food vendor.

4.030 Temporary Use Regulations.

G. Mobile Food Vendors

3. Locations and Hours of Operation.

(2) Private nonresidential property. A food truck with a current mobile food vendor permit may operate on private property within the C-2 ~~and C-3~~ district~~s~~ subject to the following additional requirements:

a. Written permission from the property owner is obtained, which shall be made available immediately to the Town upon request.

b. A food truck may not operate on an unimproved parcel.
c. No more than two food trucks may operate at any location unless a food truck rally permit has been issued.
d. Hours of operation. In the C-2 ~~and C-3~~ district~~s~~, food trucks may operate utilizing the same hours as the business on site, unless such business is open 24 hours per day, in which case the food truck may operate from 7 AM to 9 PM unless otherwise restricted further by the property owner. The Town may permit extended hours of operation for a food truck rally.
e. A food truck may operate on a singular ~~particular~~ parcel for no more than ~~40~~ 90 days in any calendar year~~.~~ to be permitted in 30 consecutive calendar day increments.
f. A food truck must have parking available on site.
g. ~~A food truck must leave the site at the end of each day with all trash and debris removed.~~ A food truck may remain on the property overnight, provided all trash and debris are removed daily and the vehicle remains in compliance with all applicable codes at all times.
h. The Town reserves the right to revoke permits for the remainder of the calendar year if a mobile food vendor or property owner receives two (2) citations of Town regulations.
i. No mobile food vendors shall engage in business, sales, or display within the C-2 district until the real property owner has been issued a separate Property Owner Permit from the Town.

4.030 Temporary Use Regulations.

G. Mobile Food Vendors

5. Mobile Food Vendor Permits.

b. Application

(1) In order to obtain a mobile food vendor permit, a mobile food service vehicle operator must complete an application form provided by the Town. The application shall include the following information:

i) ~~A signed acknowledgement that the operator has read this Ordinance and will comply with all applicable requirements herein.~~ Name and physical business address of the site where sales are to be conducted during the thirty (30) day permit period.

j) ~~Any additional information required by the permit administrator.~~ A signed acknowledgement that the operator has read this Ordinance and will comply with all applicable requirements herein.

k) Any additional information required by the permit administrator.

d. All mobile food vendor permits shall expire ~~on December 31 of each year~~ thirty (30) days after permit issuance. A mobile food vendor permit may be renewed for the next ~~12 month~~ thirty (30) day period, provided that all applicable requirements are met and the permit is not currently suspended or has not been revoked within the preceding 12 months. The fee for renewal shall be the same as the application fee for a new mobile food vendor permit.

4.030 Temporary Use Regulations.

G. Mobile Food Vendors

8. Property Owner permit.

a. A Property Owner permit shall be valid for a period of not more than ninety (90) days within a one (1) calendar year period. A citation may be issued to the property owner and/or the on-site business employee for failure to comply with any Town of Smyrna Municipal Zoning Ordinance and/or Town of Smyrna Municipal Code requirements. The Property Owner permit shall be issued from the Town for a specified parcel prior to business, sales, or display of a mobile food vendor within the C-2 district.

b. Application.

(1) In order to obtain a Property Owner permit - Mobile Food Vendor, an owner of real property must complete an application form provided by the Town. The application must be completed in its entirety and shall include the following information:

a) Applicant name.
b) Applicant home address.
c) Business address.
d) E-mail address.
e) Phone number.
f) Applicant signature and date.
g) Stamp and signature of a non-expired Notary Public.

(2) Submittal of an application for a Property Owner permit - Mobile Food Vendor must be accompanied by:

a) Payment of an application fee as set forth in the fee schedule adopted by the Town Council.
b) A site plan detailing the layout of the site with parking spaces shown and the designated location for the mobile food vendor. The plan must demonstrate that adequate parking is provided for all existing on-site businesses in addition to the vendor, in accordance with the parking standards established in the Town of Smyrna Municipal Zoning Ordinance.

(3) Each owner of real property permit holder shall have an ongoing duty to provide the Town with notice of any change to any information submitted with its permit application.

c. Permits are obtained by the property owner or their authorized agent from which the sales are to be conducted. The property owner assumes all responsibility and liability for vendors meeting Zoning Ordinance or Municipal Code requirements. This permit should be conspicuously displayed in the front window of the principal structure on site.

Town of Smyrna
Town Council Meeting
Agenda Summary

Agenda Item Number 6.d.
Department: Planning
Date: July 14, 2026

Subject:
PUBLIC HEARING: Consideration of a Resolution relative to a Plan of Services for property located on Tax Map 26, Parcels 31.00 and 32.00.

Fiscal Impact:

Contract Type:

Contract Term (if applicable):

Background:

Summary:
The attached plan of services details the services that would be provided by the Town upon the effective date of the annexation of this property. The Town would be providing all services to this property except for water, which would be provided by Consolidated Utility District.

The Planning Commission held a public hearing, reviewed the Plan of Services, and recommended approval.

Recommended Council Action:
Staff recommends approval.

Attachments:
1. Resolution #26-11 - Plan of Services

RESOLUTION

A RESOLUTION ADOPTING A PLAN OF SERVICE FOR THE ANNEXATION OF CERTAIN AREAS BY THE TOWN OF SMYRNA, TENNESSEE.

WHEREAS, TCA 6-51-102 (a) (2) as amended May 19, 1998, requires that a Plan of Service be adopted by the governing body of a municipality for areas where an annexation ordinance was not final on November 25, 1997.

NOW, THEREFORE, BE IT RESOLVED BY THE TOWN OF SMYRNA, TENNESSEE, AS FOLLOWS:

SECTION 1. Pursuant to the provisions of Section 6-51-102, Tennessee Code Annotated, there is hereby adopted, for the area bounded as described below, the following plan of service:

Hollingshead Land, LLC
W. Jefferson Pike/McCormick Court

Tax Map 26, Parcels 31.00 and 32.00, owned and requested by Hollingshead Land, LLC. Bordered on the west and south by the U.S. Army Corps of Engineers; on the east by Parcel 30.02, owned by RAM Properties, and Parcel 30.03, owned by Radhe Krishna Investment, LLC; and on the north by the existing right-of-way of S.R. 266/W. Jefferson Pike. Area annexed contains approximately 70.08 acres.

The annexation includes the annexation of the existing rights-of-way of the following public roads:

SR 266/W. Jefferson Pike: approximately 2,298 linear feet from the existing Town limits to the intersection with McCormick Court;

McCormick Court: approximately 475 linear feet from the intersection with SR 266/W. Jefferson Pike southward to its' endpoint.

A. Water

Water services will be provided by the Consolidated Utility District. CUD has a 16 inch watermain on the south side of S.R. 266/W. Jefferson Pike to serve this property.

B. Wastewater

Wastewater services will be provided by the Town of Smyrna upon extension of the wastewater services by the property owner. A sanitary sewer main will be required to be extended from the current main and a sewer lift station will be required to be built on the north side of S.R. 266/W. Jefferson Pike to serve this property.

C. Streets

1. Emergency maintenance of streets (repair of hazardous chuck holes, measures necessary for traffic flow, etc.) will begin on the effective date of annexation.

2. Routine maintenance, on the same basis as in the present Town limits, will begin in the annexed areas when funds from the State gasoline tax based on the annexed population are received.

3. Reconstruction and resurfacing of streets, installation of storm drainage facilities, construction of curbs and gutters, and other such major improvements, as the need therefore is determined by the

governing body, will be accomplished under current policies of the town.

D. Planning and Zoning

The planning and zoning jurisdiction of the Town of Smyrna will extend to the annexed area on the effective date of annexation. Town planning will thereafter encompass the annexed areas.

E. Street Lighting

Street lights will be installed in substantially developed areas within approximately 18 months after the effective date of the annexation, under the standards currently prevailing in the existing Town limits.

F. Recreation

Residents of the annexed areas may use all existing libraries and parks, etc., on and after the effective date of annexation.

G. Street Name Signs

Street name signs where needed will be installed within approximately 18 months after the effective date of annexation.

H. Fire Protection

Fire protection by the present personnel and equipment of the Smyrna Fire Department will be provided on and after the effective date of annexation. Additional personnel and equipment will be provided, if needed, to maintain current standards.

I. Police Protection

Police patrol and response to calls by the Smyrna Police Department will be provided on and after the effective date of the annexation. Police services will be provided with existing personnel and additional personnel will be provided, if needed, to maintain current standards.

J. Traffic Control

Traffic signals, traffic signs, street markings and other traffic control devices will be installed as the need is established by appropriate study and traffic standards.

K. Refuse Collection

Refuse collection and disposal services shall continue to be provided by private contracts with individual residents.

L. Inspection Services

Any inspection services now provided by the Town of Smyrna will begin in the annexed area on the effective date of the annexation.

Section 2. This Resolution shall be effective from and after its adoption.

ADOPTED THIS ____TH DAY OF JULY, 2026

TOWN OF SMYRNA, TENNESSEE

_____
Mary Esther Reed, Mayor

ATTEST:

_____
Amber Hobbs, Town Clerk

Town of Smyrna
Town Council Meeting
Agenda Summary

Agenda Item Number 6.e.
Department: Planning
Date: July 14, 2026

Subject:
PUBLIC HEARING: Consideration of an Ordinance relative to the annexation and C-2 and I-1 zoning of properties located on Tax Map 26, Parcels 31.00 and 32.00 requested by Hollingshead Land, LLC containing 70.08 acres. The properties are located at 4657 and 4665 W. Jefferson Pike. The request would include the annexation of the existing right-of-way of W. Jefferson Pike/S.R. 266 from the existing Town limits eastward approximately 2,998 linear feet, as well as the existing right-of-way of McCormick Court from W. Jefferson Pike/S.R. 266 southward approximately 475 linear feet.

Fiscal Impact:

Contract Type:

Contract Term (if applicable):

Background:
The properties that are the subject of this request are located south of W. Jefferson Pike/S.R. 266 immediately east of I-840. The Land Use Plan for this area is the 840 Gateway character area, which would support a mix of hospitality, retail, restaurant, high density residential, and industrial/warehousing uses. The surrounding zoning is RM, CN, and LI in Rutherford County. The Town would be providing all services to this area upon annexation except for water, which would be provided by Consolidated Utility District.

Summary:
The request is for 2 parcels totaling 70.08 acres to be annexed. The front approximately 5.21 acres is requested to be zoned C-2, with the remaining 64.87 acres requested to be zoned I-1. If this annexation request is approved as requested, staff recommended and the Planning Commission concurred that the existing right-of-way of W. Jefferson Pike/S.R. 266 from the current Town limits extending eastward approximately 2,998 linear feet to the intersection of McCormick Court be annexed. In addition, staff recommended and the Planning Commission concurred that approximately 475 linear feet of the existing right-of-way of a County road named

McCormick Court from W. Jefferson Pike/S.R. 266 southward to its' terminus also be annexed. Annexation of the W. Jefferson Pike/S.R. 266 right-of-way would include the annexation of the existing traffic signals at the two interstate entrance/exit ramps. The Town has an agreement with Rutherford County for the maintenance of these signals currently in place. Extension of sanitary sewer underneath I-840 and a sewer lift station on the east side of I-840 north of W. Jefferson Pike would be required to be installed.

Access to this site is currently available from W. Jefferson Pike in two locations. One access is for a TWRA access trail that is located on the Corps property immediately to the west, and one is to these properties. There is a 50' wide access easement recorded for this property to utilize across the property immediately to the east to access McCormick Court. It is proposed by the developer that the two access points to W. Jefferson Pike be consolidated into one and that it be a right-in/right-out only. This is subject to TDOT approval. It is also proposed that all truck traffic from the industrial portion of this development would access McCormick Court. The Fire Department has a concern regarding the two access points shown for the development on the concept plan as they are too close together to meet the Fire Code. This issue would have to be addressed with the site plan submittal. A traffic study would also be required at that time, and any recommended improvements would be required to be installed by the developer. The developer's representative stated at the Planning Commission meeting that it is their desire to install a signal at McCormick Court and W. Jefferson Pike, pending TDOT approval.

The Planning Commission reviewed this request and recommended approval 4 for, 0 against, with the requirement that truck traffic utilize McCormick Court for ingress/egress.

Recommended Council Action:
Staff recommends approval.

Attachments:

1. Ordinance #26-34
2. Annexation Request Application 2024_Redacted
3. Rezoning Application-Southeast C-2_Redacted
4. Rezoning Application-Southeast I-2_Redacted
5. HollingsheadMap1
6. HollingsheadSketchMap
7. Southeast of 840 Concept-Layout1
8. Speed Track Market 08-14-25
9. Cornerstone Southeast Concept Plan
10. BUILDING 1_OPTION 1_GROUND VIEW
11. 20260630_Jefferson & 840 Industrial_Site Renderings
12. Cornerstone-Road Improvement Exhibit
13. Hollingshead Land June 2026 Annexation Description

TOWN OF SMYRNA, TENNESSEE
ORDINANCE NO. 26-34

AN ORDINANCE relative to the annexation and C-2 & I-1 zoning of property located on Tax Map 26, part of Parcel 31.00 & 32.00, comprising a total of approximately 70.08 acres.

WHEREAS, the Town Council has determined that it would be in the best interests of its existing residents to annex the above-described property, which borders the current Town limits, and that the failure to annex said property will impede the prosperity of the Town and/or endanger the health, safety and welfare of its inhabitants;

WHEREAS, the Planning Commission has reviewed the proposed annexation and has recommended to the Town Council the proposed annexation; and

WHEREAS, the annexation is in agreement with the general plan for the Town; and

WHEREAS, it has been determined that the legal purposes for which zoning exists are not breached by the annexation and zoning; and

WHEREAS, it has been determined that there will not be an adverse effect upon any specific adjoining property owners and/or any such adverse effect would be justified by the overwhelming public good or welfare; and

WHEREAS, it has been determined that no one property owner or small group of property owners will benefit materially from the change to the detriment of the general public.

Section 1. That the property located on Tax Map 26, part of Parcel 31.00 & 32.00, comprising a total of approximately 70.08 acres, all of which is identified on Appendix I attached hereto and incorporated herein by reference as if set forth at length verbatim, be, and hereby is, annexed into the corporate limits of the Town of Smyrna, the health and welfare of the Town of Smyrna requiring it.

Section 2. That the property located on Tax Map 26, part of Parcel 31.00 & 32.00, comprising a total of approximately 70.08 acres, all of which is identified on Appendix I attached hereto and incorporated herein by reference as if set forth at length verbatim, be, and hereby is, zoned C-2 and I-1, the health and welfare of the Town of Smyrna requiring it.

Section 3. This ordinance shall take effect and become operative thirty (30) days after its adoption on second and final reading, the public health and welfare of the Town of Smyrna requiring it.

PASSED on first reading by the Town Council the ____ day of _____, 2026.

PASSED on second reading by the Town Council the ____ day of _____, 2026.

TOWN OF SMYRNA, TENNESSEE

_____
MARY ESTHER REED, Mayor

ATTEST:

_____
AMBER HOBBS, Town Clerk

Town of Smyrna

Annexation Request Application

APPLICANT INFORMATION:		
Name/Company: Hollingshead Land LLC		
Street Address: 1000 Hollingshead Circle		
City: Murfreesboro	State: TN	ZIP: 37129
Email: [redacted]	Phone: [redacted]	
CONTRACTOR/DEVELOPER INFORMATION: CHECK BOX IF SAME AS APPLICANT ☑		
Name/Company:		
Street Address:		
City:	State:	ZIP:
Email:	Phone:	
PROPERTY INFORMATION		
Street Address/Intersecting Streets: 4657 & 4665 W Jefferson Pike		
Tax Map: 26	Group:	Parcel: 31.00 & 32.00
Requested Lot Area (Square feet/Acres): 70.08 Acres		
Existing Zoning: RM	Requested Smyrna Zoning: C-2 & I-1	
*Current Property Owner (See Note Below): Hollingshead Land LLC		
APPLICANT AUTHORIZATION		
Applicant Signature:		Date:
OFFICE USE ONLY		
Staff Initials:	Review Fee:	Date:

- ***If the applicant is not the current property owner, authorization must be provided by the current property owner for the request of annexation as mandated by State law.***
- Applications are to be submitted no later than 12:00 PM noon on the initial deadline date unless otherwise noted.
- All meetings are held at Smyrna Town Hall - 315 South Lowry Street - at 5:00 PM in the Town Council Chambers.
- All supporting documents must be submitted at the time of application.

2024 SUBMITTAL AND MEETING CALENDAR
See the full calendar on the Town of Smyrna website

APPLICATION DEADLINE	MEETING DATE
DECEMBER 11, 2023	JANUARY 4
JANUARY 16 - 8:00 AM	FEBRUARY 1
FEBRUARY 20 - 8:00 AM	MARCH 7
MARCH 18	APRIL 4
APRIL 15	MAY 2
MAY 20	JUNE 6
JUNE 17	TUESDAY - JULY 2
JULY 15	AUGUST 1
AUGUST 19	SEPTEMBER 5
SEPTEMBER 16	OCTOBER 3
OCTOBER 21	NOVEMBER 7
NOVEMBER 18	DECEMBER 5

MEMBERS

Name	Term Expiration
Mike Allen	2024
Tim Slate	2024
Charles Scurr	2025
Miranda Swift	2025
Amy Wise	2025
Marc Adkins, Council Member	Term of Office
Tim Morrell, Council Member	Term of Office

Town of Smyrna

Rezoning Request Application

APPLICANT INFORMATION:		
Name/Company: Hollingshead Land LLC		
Street Address: 1000 Hollingshead Circle		
City: Murfreesboro	State: TN	ZIP: 37129
Email: [redacted]	Phone: [redacted]	

CONTRACTOR/DEVELOPER INFORMATION: CHECK BOX IF SAME AS APPLICANT ☑		
Name/Company:		
Street Address:		
City:	State:	ZIP:
Email:	Phone:	

PROPERTY INFORMATION		
Street Address/Intersecting Streets: 4665 W Jafferson Pike		
Tax Map: 26	Group:	Parcel: 31.00
Requested Lot Area (Square feet/Acres): 5.21 Acres (227,302 S.F.)		
Existing Zoning: RM(County)	**Requested Zoning:** C-2	
*Current Property Owner (See Note Below): Hollingshead Land LLC		

APPLICANT AUTHORIZATION	
Applicant Signature:	Date:

OFFICE USE ONLY		
Staff Initials:	Review Fee:	Date:

- ***If the applicant is not the current property owner, authorization must be provided by the current property owner for the request of rezoning as mandated by State law.***
- Applications are to be submitted no later than 12:00 PM noon on the initial deadline date unless otherwise noted.
- All meetings are held at Smyrna Town Hall - 315 South Lowry Street - at 5:00 PM in the Town Council Chambers.
- All supporting documents must be submitted at the time of application.

2024 SUBMITTAL AND MEETING CALENDAR
See the full calendar on the Town of Smyrna website

APPLICATION DEADLINE	MEETING DATE
DECEMBER 11, 2023	JANUARY 4
JANUARY 16 - 8:00 AM	FEBRUARY 1
FEBRUARY 20 - 8:00 AM	MARCH 7
MARCH 18	APRIL 4
APRIL 15	MAY 2
MAY 20	JUNE 6
JUNE 17	TUESDAY - JULY 2
JULY 15	AUGUST 1
AUGUST 19	SEPTEMBER 5
SEPTEMBER 16	OCTOBER 3
OCTOBER 21	NOVEMBER 7
NOVEMBER 18	DECEMBER 5

MEMBERS

Name	Term Expiration
Mike Allen	2024
Tim Slate	2024
Charles Scurr	2025
Miranda Swift	2025
Amy Wise	2025
Marc Adkins, Council Member	Term of Office
Tim Morrell, Council Member	Term of Office

Town of Smyrna

Rezoning Request Application

APPLICANT INFORMATION:		
Name/Company: Hollingshead Land LLC		
Street Address: 1000 Hollingshead Circle		
City: Murfreesboro	State: TN	ZIP: 37129
Email: [redacted]	Phone: [redacted]	

CONTRACTOR/DEVELOPER INFORMATION: CHECK BOX IF SAME AS APPLICANT ☑		
Name/Company:		
Street Address:		
City:	State:	ZIP:
Email:	Phone:	

PROPERTY INFORMATION		
Street Address/Intersecting Streets: 4657 W Jafferson Pike		
Tax Map: 26	Group:	Parcel: 31.00 & 32.00
Requested Lot Area (Square feet/Acres): 64.79 Acres (2,822,252 S.F.)		
Existing Zoning: RM (County)	**Requested Zoning:** I-2	
*Current Property Owner (See Note Below): Hollingshead Land LLC		

APPLICANT AUTHORIZATION	
Applicant Signature:	Date:

OFFICE USE ONLY		
Staff Initials:	Review Fee:	Date:

- ***If the applicant is not the current property owner, authorization must be provided by the current property owner for the request of rezoning as mandated by State law.***
- Applications are to be submitted no later than 12:00 PM noon on the initial deadline date unless otherwise noted.
- All meetings are held at Smyrna Town Hall - 315 South Lowry Street - at 5:00 PM in the Town Council Chambers.
- All supporting documents must be submitted at the time of application.

2024 SUBMITTAL AND MEETING CALENDAR
See the full calendar on the Town of Smyrna website

APPLICATION DEADLINE	MEETING DATE
DECEMBER 11, 2023	JANUARY 4
JANUARY 16 - 8:00 AM	FEBRUARY 1
FEBRUARY 20 - 8:00 AM	MARCH 7
MARCH 18	APRIL 4
APRIL 15	MAY 2
MAY 20	JUNE 6
JUNE 17	TUESDAY - JULY 2
JULY 15	AUGUST 1
AUGUST 19	SEPTEMBER 5
SEPTEMBER 16	OCTOBER 3
OCTOBER 21	NOVEMBER 7
NOVEMBER 18	DECEMBER 5

MEMBERS

Name	Term Expiration
Mike Allen	2024
Tim Slate	2024
Charles Scurr	2025
Miranda Swift	2025
Amy Wise	2025
Marc Adkins, Council Member	Term of Office
Tim Morrell, Council Member	Term of Office

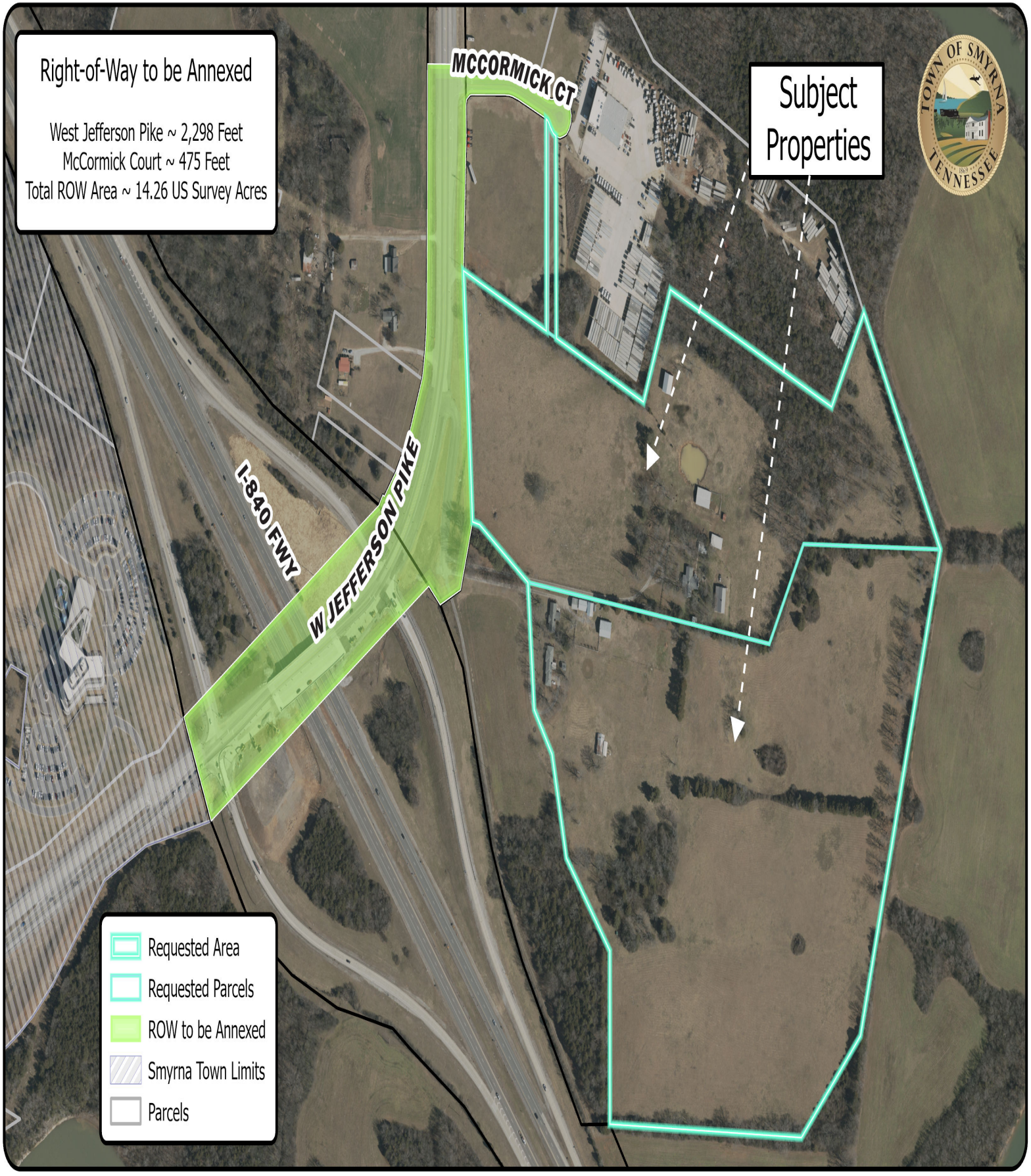

Annexation with I-1 & C-2 Zoning Request (4665 W Jefferson Pk)

Tax Map: 26 | Parcels: 31.00 & 32.00 | Acres: +/- 70.08

N

0 270 540 Feet

Owners: Hollingshead Land, LLC

Coordinate System: NAD 1983 StatePlane Tennessee FIPS 4100 Feet

Map data © OpenStreetMap contributors, Microsoft, Facebook, Inc. and its affiliates, Esri Community Maps contributors, Map

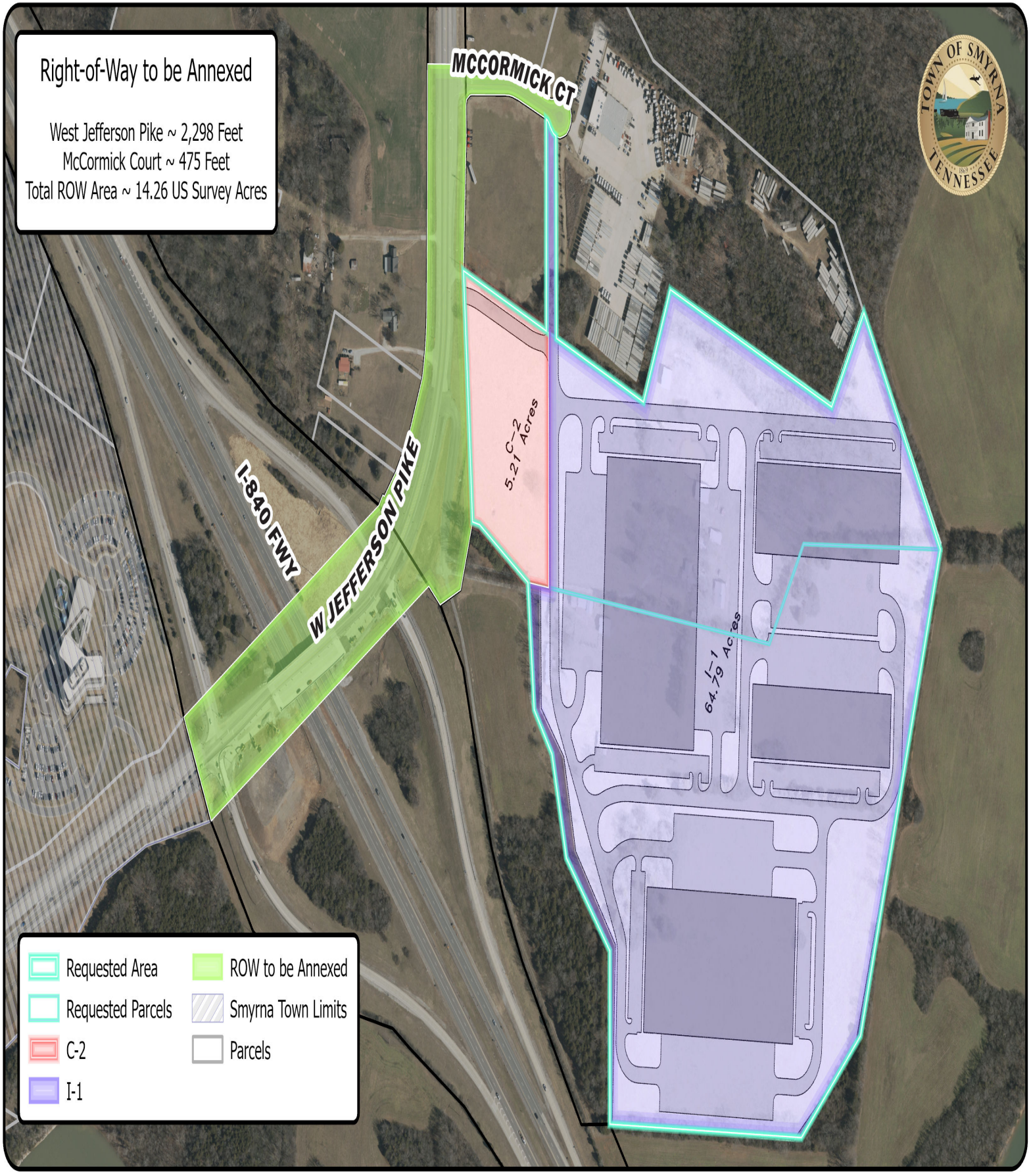

Annexation with I-1 & C-2 Zoning Request (4665 W Jefferson Pk)

Tax Map: 26 | Parcels: 31.00 & 32.00 | Acres: +/- 70.08

N

0 270 540 Feet

Owners: Hollingshead Land, LLC

Coordinate System: NAD 1983 StatePlane Tennessee FIPS 4100 Feet

Map data © OpenStreetMap contributors, Microsoft, Facebook, Inc. and its affiliates, Esri Community Maps contributors, Map

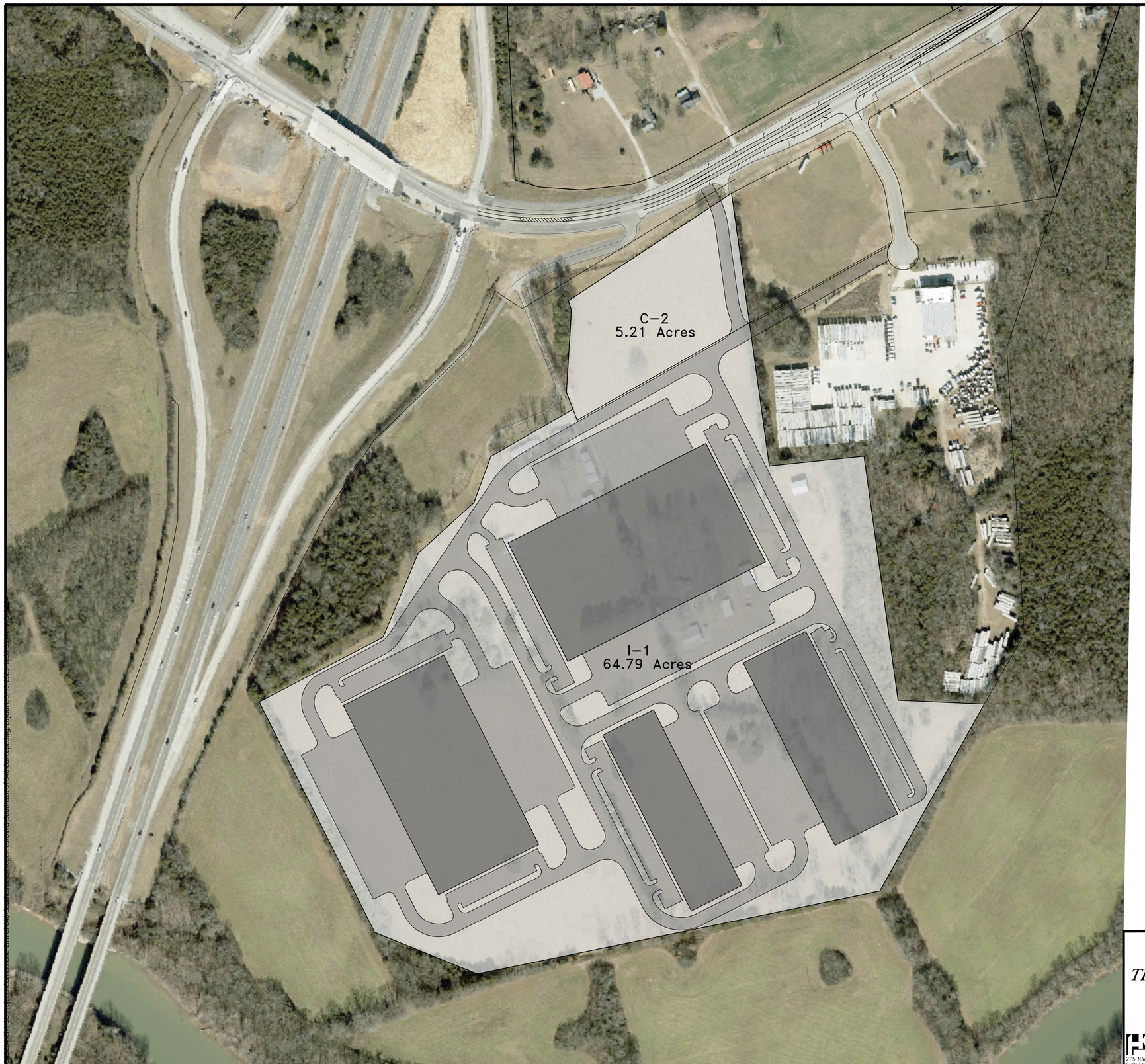

Bearings based on the Tennessee State Plane Coordinate System (NAD83)

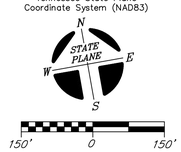

THIS PROPERTY IS NOT INCLUDED IN AN AREA DESIGNATED AS "SPECIAL FLOOD HAZARD" ON THE NATIONAL FLOOD INSURANCE PROGRAM COMMUNITY MAP 470165, PANEL NO. 0145H, ZONE: X, DATED 01-05-07.

DRAWING REVISIONS

NO.	DATE	DESCRIPTION
0	05-11-26	ORIGINAL ISSUE

TRANSMITTAL COPY FOR REVIEW PURPOSES ONLY

HUDDLESTON-STEELE ENGINEERING, INC.
2115 N.W. BROAD STREET, MURFREESBORO, TN 37129
SURVEYING : 893 - 4084, FAX: 893 - 0080

CONCEPT PLAN W/ AERIAL

CORNERSTONE AT SMRYNA

SOUTHEAST SIDE OF 840 ON JEFFERSON PIKE TN

5TH CIVIL DISTRICT OF RUTHERFORD COUNTY, TENNESSEE

DATE: MAY, 2026 | SCALE: 1"=150' | SHEET C1.0

SITE PLAN

SPEED TRACK MARKET

LOT 4 MCCORMICK COMMERCIAL SUBDIVISION

4435 W JEFFERSON PIKE, RUTHERFORD COUNTY

5TH CIVIL DISTRICT OF RUTHERFORD COUNTY, TENNESSEE

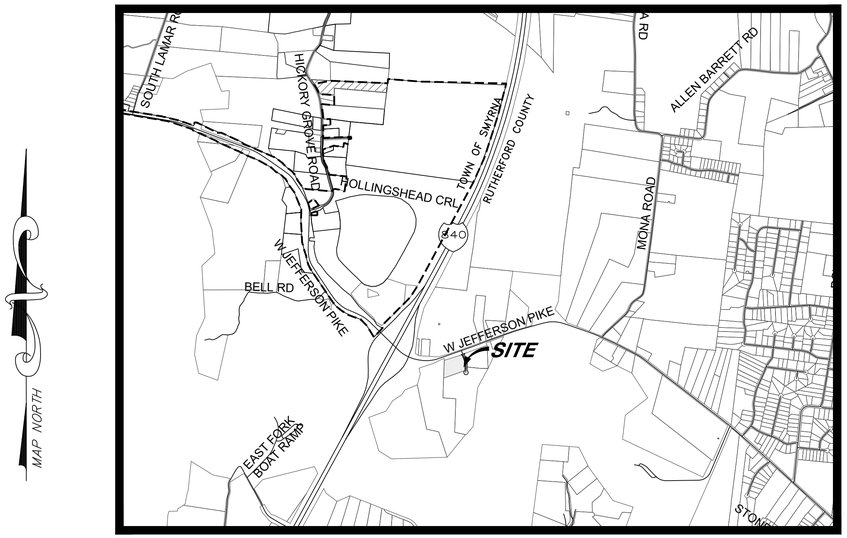

LOCATION MAP

This development is in the J. Percy Priest Reservoir Watershed and is in a "Threatened" portion of J. Percy Priest Reservoir According to the Division of Water Resources Maps

This development is not known to be within the prescribed distances of natural gas transmission pipelines as stated in TCA 13-3-414

SHEET INDEX

SHEET	DESCRIPTION
C0.0	COVER SHEET
C1.0	EXISTING CONDITIONS
C2.0	SITE PLAN
C2.1	UTILITIES PLAN
C2.2	GRADING & DRAINAGE PLAN
C3.0	LANDSCAPE PLAN
C4.0	DETAILS
C4.1	DETAILS
C5.0	EPSC–INITIAL MEASURES
C5.1	EPSC–INTERMEDIATE MEASURES
C5.2	EPSC–FINAL MEASURES
C6.0	AUTOTURN
C7.0	PHOTOMETRIC PLAN

DRAWING REVISIONS		
NO.	DATE	DESCRIPTION
0	06–10–25	ORIGINAL ISSUE
1	07–10–25	REVISED PER RCRPC COMMENTS
2	07–24–25	REVISED PER RCRPC COMMENTS
3	08–14–25	REVISED FOR SUBMITTALS FOR UTILITIES

NOTE:
Per Rutherford County Regional Planning Commission, As–built surveys and certifications will be required for detention ponds, public storm infrastructure, and cut/fill, prior to Certificate of Occupancy.

08-14-25

HUDDLESTON–STEELE ENGINEERING, INC.
2115 N.W. BROAD STREET, MURFREESBORO, TN 37129
SURVEYING : 893 – 4084, FAX: 893 – 0080

S:\ACAD204\Civil 3D Projects\McCormick Subdivision\DWG\Site Plan May 2025.dwg, Cover, 8/14/2025 1:32:01 PM, ACAD204

PLAN NOTES

1. In Tennessee, it is a requirement per "The Underground Utility Damage Prevention Act" that anyone who engages in excavation must notify all known underground utility owners, no less than three nor more than ten working days prior of their intent to excavate. A list of these utilities may be obtained from the County Register of Deeds. Those utilities that participate in the Tennessee One-Call system can be notified by calling toll free 1-800-351-1111.
2. Underground utilities shown were located using available above ground evidence, and also from information obtained from the respective utility companies. The existence or non-existence of the utilities shown and any other utilities which may be present on this site or adjacent sites should be confirmed with the utility owner prior to commencing any work.
3. Parcels may be subject to additional easements, and/or restrictions, by record or prescription, that a complete title search may reveal.
4. Public utility and drainage easements where shown hereon are intended to indicate an easement for construction, operation, and maintenance of public utilities and drainage ways; including, but not limited to, sanitary sewers, force mains, water lines, telephone signal conduits, electric conductors, drainage pipes, and natural gas lines. Easements may not have infrastructure constructed within them until some future time and there may be no notice or consultation with the individual lot Owners of this construction.
5. Per RCRPC, Will need signal plans approved by the county and TDOT prior to the preconstruction meeting.
6. Per RCRPC, the approval of this site plan does not constitute approval of any signage.
7. Per RCRPC, all above ground or underground tanks will require permitting through the Fire Marshal's Office.
8. Per RCRPC, all grease traps must have traffic rated lids & access ports.

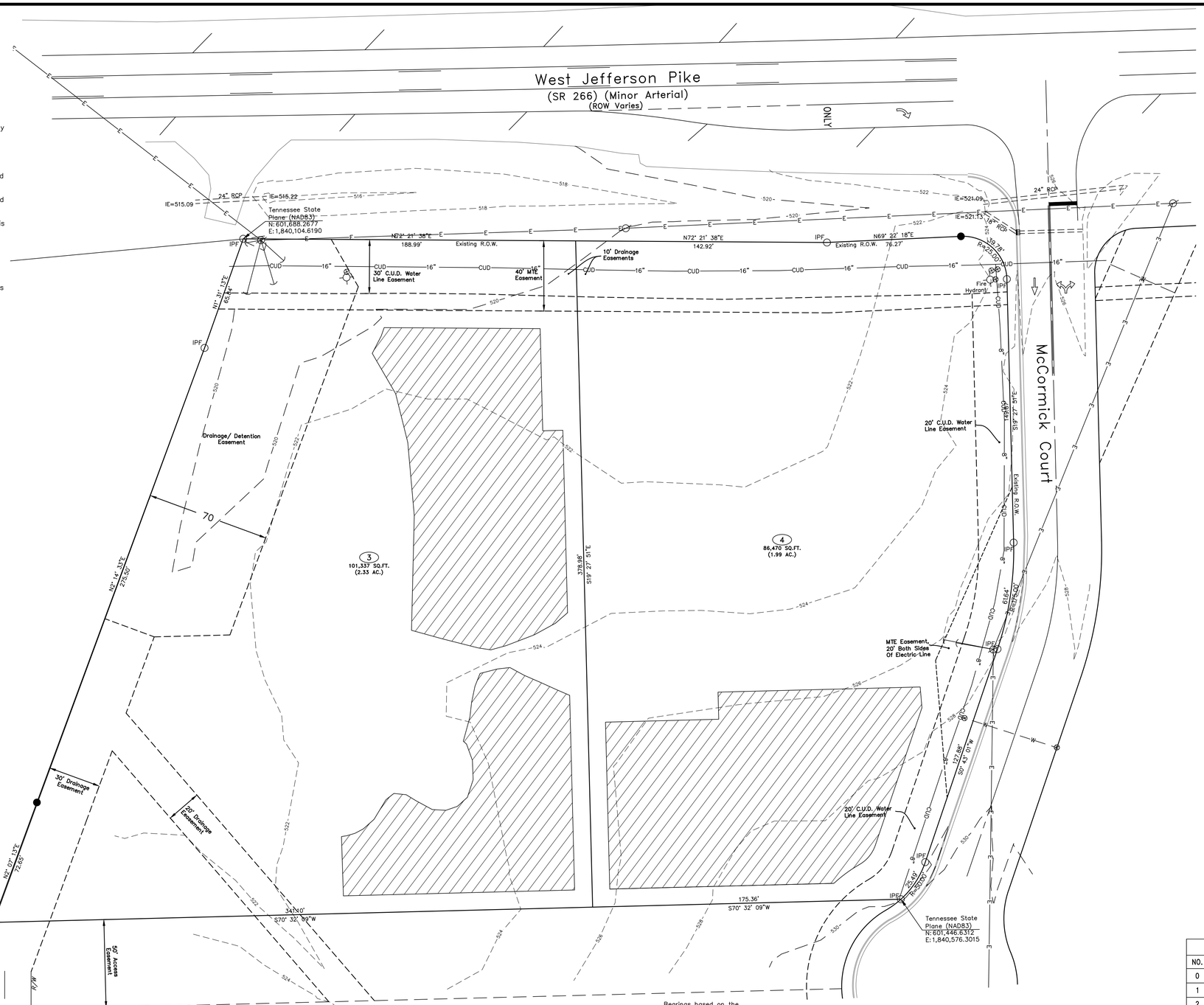

ZONED: LI (Light Industrial)
FRONT SETBACK: 50'
SIDE SETBACK: 20'
REAR SETBACK: 20'

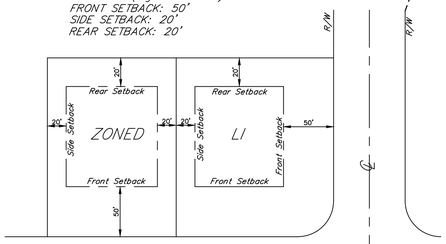

TYPICAL BUILDING SETBACK DETAIL

Bearings based on the Tennessee State Plane Coordinate System (NAD83)

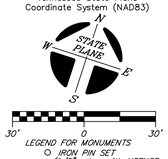

LEGEND FOR MONUMENTS
- IRON PIN SET (1/2" rebar with HSENGR cap)
- IPF IRON PIN FND.
- RAILROAD SPIKE
- FENCE
- SURVEY POINT
- NAIL
- CONC. MARKER FND.
- UGC MARKER

Developer: Radhe Krishna Investment, LLC
Attn: Jaydev Patel
Address: 4801 Waterloak Way
Smyrna, TN 37167

Owner: RAM Properties
Address: P.O. Box 10989
Murfreesboro,TN 37129
Tax Map 26, Parcel 30.03
Record Book 1609, Page 1161

THIS TRACT IS NOT LOCATED IN AN AREA DESIGNATED AS "SPECIAL FLOOD HAZARD" ON THE NATIONAL FLOOD INSURANCE PROGRAM COMMUNITY MAP 470149, PANEL NO. 0131H, ZONE: X, DATED: JANUARY 05, 2007.

LEGEND

- Power Pole
- Existing Fire Hydrant
- Proposed Fire Hydrant
- Reducer
- Water Valve
- Concrete Thrust Block
- Existing Water Line
- Proposed Water Line
- Existing Sanitary Sewer Line
- Proposed Sanitary Sewer Line
- Existing Manhole
- Proposed Manhole
- Existing Contours
- Proposed Contours
- Gas Meter
- Existing Gas Line
- Proposed Gas Line
- Proposed Underground Electric Line
- Proposed Underground Data Line Conduit
- Proposed Underground Phone Line Conduit
- Power Pole Anchor
- Existing Spot Elevation
- Proposed Spot Elevation
- Existing Storm Line
- Proposed Storm Line
- CUD Water Meter
- Proposed Driveway Location

DRAWING REVISIONS		
NO.	DATE	DESCRIPTION
0	06-10-25	ORIGINAL ISSUE
1	07-10-25	REVISED PER RCRPC COMMENTS
2	07-24-25	REVISED PER RCRPC COMMENTS

SHUDDLESTON-STEELE ENGINEERING, INC.
2115 N.W. BROAD STREET, MURFREESBORO, TN 37129
SURVEYING : 893 - 4084, FAX: 893 - 0080

07-24-25

EXISTING CONDITIONS
SPEED TRACK MARKET

LOT 4 MCCORMICK COMMERCIAL SUBDIVISON
4435 W JEFFERSON PIKE, MURFREESBORO, TN
5TH CIVIL DISTRICT OF RUTHERFORD COUNTY, TENNESSEE

DATE: JUNE, 2025 | SCALE: 1"=30' | SHEET C1.0

S:\ACAD204\Civil 3D Projects\McCormick Subdivision\DWG\Site Plan May 2025.dwg, Exist, 7/24/2025 7:35:41 AM, ACAD204

PLAN NOTES

1. In Tennessee, it is a requirement per "The Underground Utility Damage Prevention Act" that anyone who engages in excavation must notify all known underground utility owners, no less than three nor more than ten working days prior of their intent to excavate. A list of these utilities may be obtained from the County Register of Deeds. Those utilities that participate in the Tennessee One-Call system can be notified by calling toll free 1-800-351-1111.
2. Underground utilities shown were located using available above ground evidence, and also from information obtained from the respective utility companies. The existence or non-existence of the utilities shown and any other utilities which may be present on this site or adjacent sites should be confirmed with the utility owner prior to commencing any work.
3. Parcels may be subject to additional easements, and/or restrictions, by record or prescription, that a complete title search may reveal.
4. Public utility and drainage easements where shown hereon are intended to indicate an easement for construction, operation, and maintenance of public utilities and drainage ways; including, but not limited to, sanitary sewers, force mains, water lines, telephone signal conduits, electric conductors, drainage pipes, and natural gas lines. Easements may not have infrastructure constructed within them until some future time and there may be no notice or consultation with the individual lot Owners of this construction.
5. Per RCRPC, Will need signal plans approved by the county and TDOT prior to the preconstruction meeting.
6. Per RCRPC, the approval of this site plan does not constitute approval of any signage.
7. Per RCRPC, all above ground or underground tanks will require permitting through the Fire Marshal's Office.
8. Per RCRPC, all grease traps must have traffic rated lids & access ports.

CERTIFICATION OF GENERAL APPROVAL FOR INSTALLATION OF SUBSURFACE SEWAGE DISPOSAL SYSTEMS WITH RESTRICTIONS

General approval is hereby granted for lot(s) proposed hereon as being suitable for subsurface sewage disposal with the listed and/or attached restrictions.
Before the initiation of construction, the location of the house or other structure(s) and plans for the subsurface sewage disposal system shall be approved by the Division of Water Resources.

Date

Tennessee Department of Environment and Conservation Division of Ground Water Protection

CERTIFICATE OF APPROVAL FOR ELECTRIC POWER

Middle Tennessee Electric Membership Corporation (MTEMC) will provide electric service to the subject property according to the normal operating practices of MTEMC as defined in the rules and regulations, bylaws, policy bulletins and operational bulletins of MTEMC, and in accordance with the plat approval checklist, tree planting guidelines and other regulations contained on the MTEMC website at www.mtemc.com (collectively the "Requirements"). No electric service will be provided until MTEMC's Requirements have been met and approved in writing by an authorized representative of MTEMC. Any approval is, at all times, contingent upon continuing compliance with MTEMC's requirements.

Date

Middle Tennessee Electric Membership Corporation

CERTIFICATE FOR APPROVAL OF WATER SYSTEMS

I hereby certify that the subdivision plat entitled "Site Plan, Speed Track Market" has been approved by the engineers of Consolidated Utility District of Rutherford County for water service, provided however, that the lines, valves, and fittings must be installed in accordance with C.U.D. specifications as determined by its engineers. No water service will be provided until that certification has been made in writing.

Date

Consolidated Utility District Official of Rutherford County

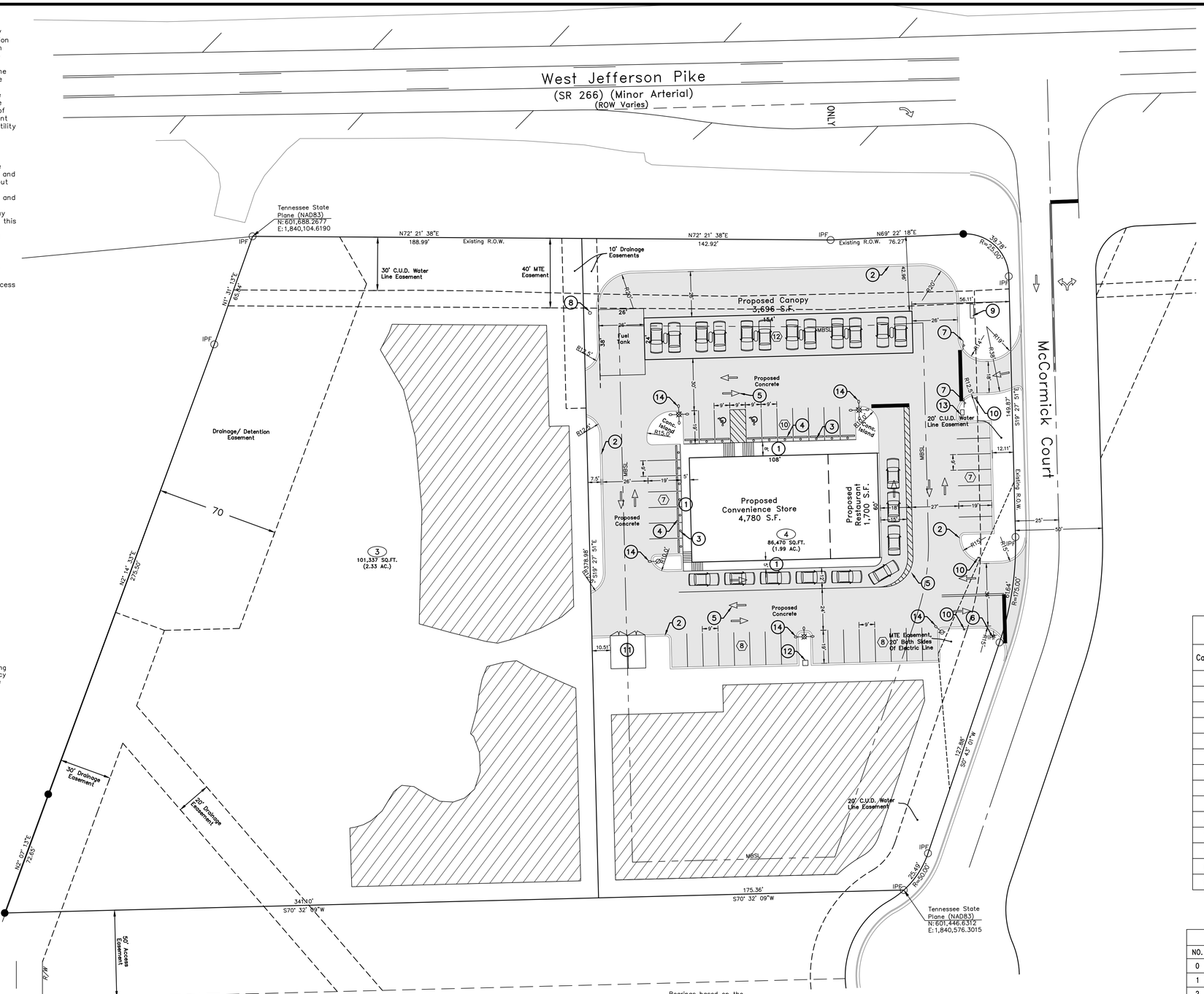

ZONED: LI (Light Industrial)
FRONT SETBACK: 50'
SIDE SETBACK: 20'
REAR SETBACK: 20'

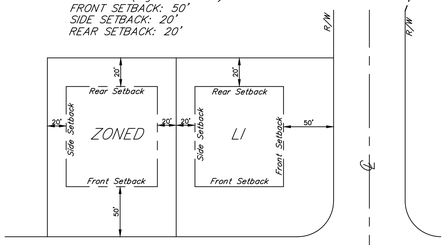

TYPICAL BUILDING SETBACK DETAIL
N.T.S.

NOTE: ALL ABOVEGROUND OR UNDERGROUND TANKS WILL REQUIRE PERMITTING THROUGH THE FIRE MARSHAL'S OFFICE.

Bearings based on the Tennessee State Plane Coordinate System (NAD83)

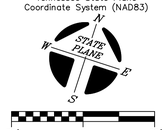

LEGEND FOR MONUMENTS
- ○ IRON PIN SET (1/2" rebar with HSENGR cap)
- IPF ○ IRON PIN FND.
- ○ RAILROAD SPIKE
- FENCE
- ● SURVEY POINT
- △ NAIL
- ■ CONC. MARKER FND.
- ◎ UGC MARKER

LEGEND

- Power Pole
- Existing Fire Hydrant
- Proposed Fire Hydrant
- Reducer
- Water Valve
- Concrete Thrust Block
- Existing Water Line
- Proposed Water Line
- Existing Sanitary Sewer Line
- Proposed Sanitary Sewer Line
- Existing Manhole
- Proposed Manhole
- Existing Contours
- Proposed Contours
- Gas Meter
- Existing Gas Line
- Proposed Gas Line
- Proposed Underground Electric Line
- Proposed Underground Data Line Conduit
- Proposed Underground Phone Line Conduit
- Power Pole Anchor
- 698.7+ Existing Spot Elevation
- 698.7+ Proposed Spot Elevation
- Existing Storm Line
- Proposed Storm Line
- CUD Water Meter
- Proposed Driveway Location
- Proposed Light Pole

SITE DATA:

EXISTING USE: VACANT LOT
PROPOSED USE: CONVENIENCE AND RESTAURANT

LOT AREA: 1.99 ACRES±, 86,470 S.F.±

PROPOSED BUILDING AREA: 6,480 S.F.±
PROPOSED BUILDING HEIGHT: 20'-2"
CANOPY HEIGHT: 19'
CANOPY CLEARANCE: 16'
F.A.R.: 6,480/86,470=7.49%

OPEN SPACE: 79,990 S.F.
O.S.R.: 79,990/6480=12.34

NEW PAVING AREA: 40,020 S.F.
OVERALL LOT COVERAGE: 46,420/86,470 =53.7%

Required Parking:
4,780 S.F Convenience Store
(1 space for each 250 S.F)
1,700 S.F Restaurant
(1 space for each 150 S.F)
Total= 30.45 =31 Spaces

Proposed Parking: 38 spaces + 2 handicap spaces
+ 12 Gas Pump spaces
= 52 spaces.

Construction Legend

Callout	Description
1	Proposed Sidewalk
2	Proposed Extruded Curb
3	Proposed Bollards
4	Proposed Wheel Stop
5	Proposed Striping
6	Proposed Stop Sign
7	Do Not Enter Sign
8	Pole Sign
9	Monument Sign
10	Directional Sign
11	Proposed Double Dumpster Enclosure
12	Electric Vehicle Charging
13	Air/Vacuum Station
14	Proposed Light Pole

DRAWING REVISIONS

NO.	DATE	DESCRIPTION
0	06-10-25	ORIGINAL ISSUE
1	07-10-25	REVISED PER RCRPC COMMENTS
2	07-24-25	REVISED PER RCRPC COMMENTS

Developer: Radhe Krishna Investment, LLC
Attn: Jaydev Patel
Address: 4801 Waterlook Way
Smyrna, TN 37167

Owner: RAM Properties
Address: P.O. Box 10989
Murfreesboro,TN 37129
Tax Map 26, Parcel 30.03
Record Book 1609, Page 1161

THIS TRACT IS NOT LOCATED IN AN AREA DESIGNATED AS "SPECIAL FLOOD HAZARD" ON THE NATIONAL FLOOD INSURANCE PROGRAM COMMUNITY MAP 470149, PANEL NO. 0131H, ZONE: X, DATED: JANUARY 05, 2007.

07-24-25

SHUDDLESTON-STEELE ENGINEERING, INC.
2115 N.W. BROAD STREET, MURFREESBORO, TN 37129
SURVEYING : 893 - 4084, FAX: 893 - 0080

SITE PLAN
SPEED TRACK MARKET

LOT 4 MCCORMICK COMMERCIAL SUBDIVISON
4435 W JEFFERSON PIKE, MURFREESBORO, TN
5TH CIVIL DISTRICT OF RUTHERFORD COUNTY, TENNESSEE

DATE: JUNE, 2025 | SCALE: 1"=30' | SHEET C2.0

S:\ACAD204\Civil 3D Projects\McCormick Subdivision\DWG\Site Plan May 2025.dwg, Site Plan, 7/24/2025 7:35:25 AM, ACAD204

PLAN NOTES

1. In Tennessee, it is a requirement per "The Underground Utility Damage Prevention Act" that anyone who engages in excavation must notify all known underground utility owners, no less than three nor more than ten working days prior of their intent to excavate. A list of these utilities may be obtained from the County Register of Deeds. Those utilities that participate in the Tennessee One-Call system can be notified by calling toll free 1-800-351-1111.
2. Underground utilities shown were located using available above ground evidence, and also from information obtained from the respective utility companies. The existence or non-existence of the utilities shown and any other utilities which may be present on this site or adjacent sites should be confirmed with the utility owner prior to commencing any work.
3. Parcels may be subject to additional easements, and/or restrictions, by record or prescription, that a complete title search may reveal.
4. Public utility and drainage easements where shown hereon are intended to indicate an easement for construction, operation, and maintenance of public utilities and drainage ways; including, but not limited to, sanitary sewers, force mains, water lines, telephone signal conduits, electric conductors, drainage pipes, and natural gas lines. Easements may not have infrastructure constructed within them until some future time and there may be no notice or consultation with the individual lot Owners of this construction.
5. Per RCRPC, Will need signal plans approved by the county and TDOT prior to the preconstruction meeting.
6. Per RCRPC, the approval of this site plan does not constitute approval of any signage.
7. Per RCRPC, all above ground or underground tanks will require permitting through the Fire Marshal's Office.
8. Per RCRPC, all grease traps must have traffic rated lids & access ports.

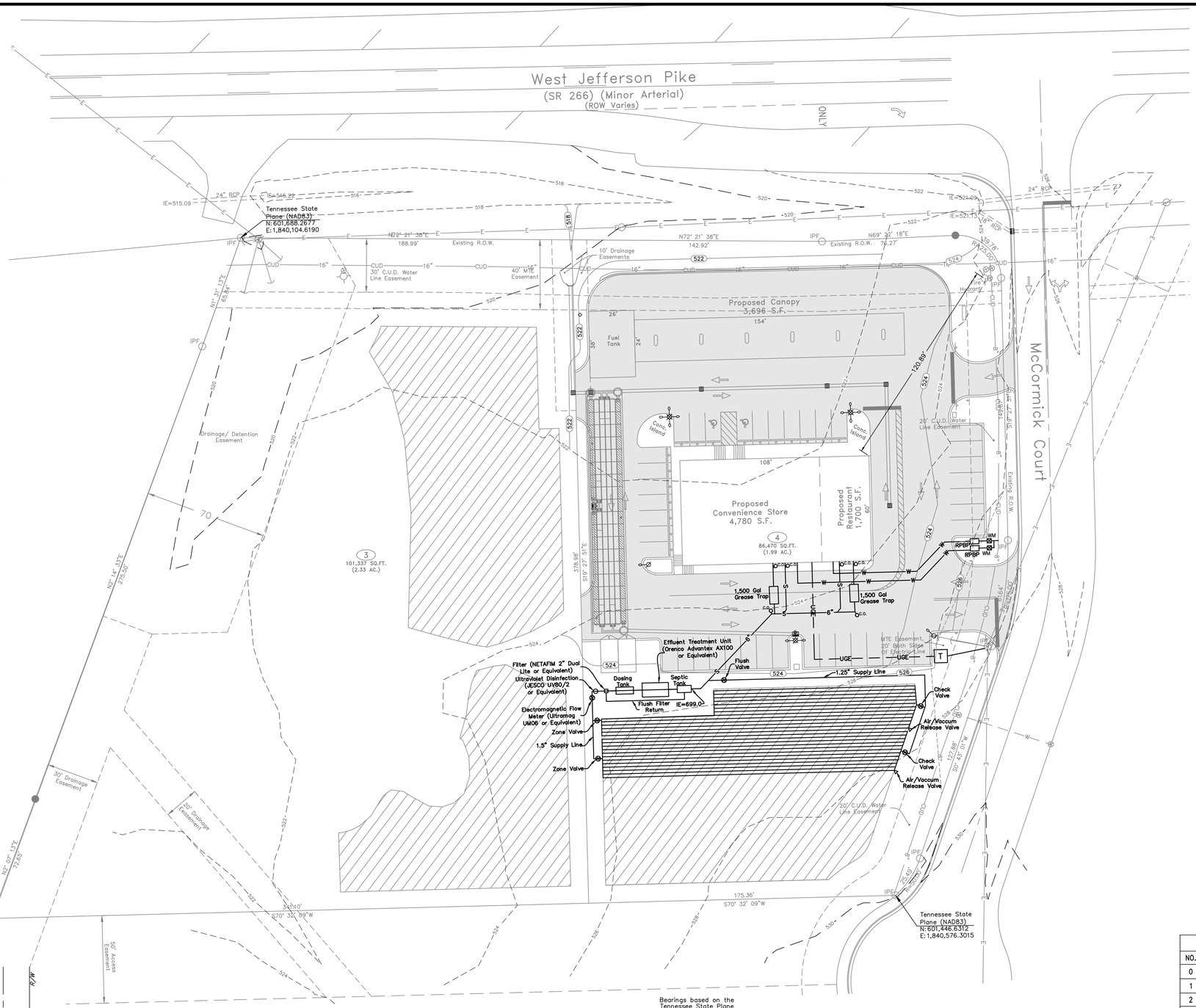

LEGEND

- Power Pole
- Existing Fire Hydrant
- Proposed Fire Hydrant
- Reducer
- Water Valve
- Concrete Thrust Block
- Existing Water Line
- Proposed Water Line
- Existing Sanitary Sewer Line
- Proposed Sanitary Sewer Line
- Existing Manhole
- Proposed Manhole
- Existing Contours
- Proposed Contours
- Existing Gas Line
- Proposed Gas Line
- Proposed Underground Electric Line
- Proposed Underground Data Line Conduit
- Proposed Underground Phone Line Conduit
- Power Pole Anchor
- Existing Spot Elevation
- Proposed Spot Elevation
- Existing Storm Line
- Proposed Storm Line
- CUD Water Meter
- Proposed Driveway Location

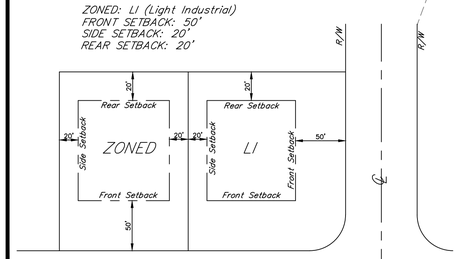

TYPICAL BUILDING SETBACK DETAIL

NOTE: ALL ABOVEGROUND OR UNDERGROUND TANKS WILL REQUIRE PERMITTING THROUGH THE FIRE MARSHAL'S OFFICE.

Bearings based on the Tennessee State Plane Coordinate System (NADB3)

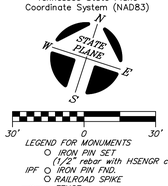

LEGEND FOR MONUMENTS
- IRON PIN SET (1/2" rebar with HSENGR cap)
- IPF IRON PIN FND.
- RAILROAD SPIKE
- FENCE
- SURVEY POINT
- NAIL
- CONC. MARKER FND.
- UGC MARKER

Developer: Radhe Krishna Investment, LLC
Attn: Jaydev Patel
Address: 4801 Waterlook Way
Smyrna, TN 37167

Owner: RAM Properties
Address: P.O. Box 10989
Murfreesboro,TN 37129
Tax Map 26, Parcel 30.03
Record Book 1609, Page 1161

THIS TRACT IS NOT LOCATED IN AN AREA DESIGNATED AS "SPECIAL FLOOD HAZARD" ON THE NATIONAL FLOOD INSURANCE PROGRAM COMMUNITY MAP 470149, PANEL NO. 0131H, ZONE: X, DATED: JANUARY 05, 2007.

DRAWING REVISIONS		
NO.	DATE	DESCRIPTION
0	06-10-25	ORIGINAL ISSUE
1	07-10-25	REVISED PER RCRPC COMMENTS
2	07-24-25	REVISED PER RCRPC COMMENTS
3	08-14-25	REVISED FOR SUBMITTALS FOR UTILITIES

08-14-25

SHUDDLESTON-STEELE ENGINEERING, INC.
2115 N.W. BROAD STREET, MURFREESBORO, TN 37129
SURVEYING : 893 - 4084, FAX: 893 - 0080

UTILITIES PLAN
SPEED TRACK MARKET

LOT 4 MCCORMICK COMMERCIAL SUBDIVISON
4435 W JEFFERSON PIKE, MURFREESBORO, TN
5TH CIVIL DISTRICT OF RUTHERFORD COUNTY, TENNESSEE

DATE: JUNE, 2025	SCALE: 1"=30'	SHEET C2.1

S:\ACAD20\Civil 3D Projects\McCormick Subdivision\DWG\Site Plan May 2025.dwg, Utilities, 8/14/2025 1:31:36 PM, ACAD204

PLAN NOTES

1. In Tennessee, it is a requirement per "The Underground Utility Damage Prevention Act" that anyone who engages in excavation must notify all known underground utility owners, no less than three nor more than ten working days prior of their intent to excavate. A list of these utilities may be obtained from the County Register of Deeds. Those utilities that participate in the Tennessee One-Call system can be notified by calling toll free 1-800-351-1111.
2. Underground utilities shown were located using available above ground evidence, and also from information obtained from the respective utility companies. The existence or non-existence of the utilities shown and any other utilities which may be present on this site or adjacent sites should be confirmed with the utility owner prior to commencing any work.
3. Parcels may be subject to additional easements, and/or restrictions, by record or prescription, that a complete title search may reveal.
4. Public utility and drainage easements where shown hereon are intended to indicate an easement for construction, operation, and maintenance of public utilities and drainage ways; including, but not limited to, sanitary sewers, force mains, water lines, telephone signal conduits, electric conductors, drainage pipes, and natural gas lines. Easements may not have infrastructure constructed within them until some future time and there may be no notice or consultation with the individual lot Owners of this construction.
5. Per RCRPC, Will need signal plans approved by the county and TDOT prior to the preconstruction meeting.
6. Per RCRPC, the approval of this site plan does not constitute approval of any signage.
7. Per RCRPC, all above ground or underground tanks will require permitting through the Fire Marshal's Office.
8. Per RCRPC, all grease traps must have traffic rated lids & access ports.

Drainage Pipe Table

Pipe	Invert In	Invert Out	Length (LF)	Slope (%)	Pipe Size/Type
A1-Det1	519.72	519.00	96	0.75	15" RCP
B1-B2	520.60	520.10	66	0.75	15" RCP
B2-B3	520.10	519.87	30	0.75	15" RCP
B3-B4	519.87	519.36	68	0.75	15" RCP
B4-Det2	519.36	519.00	48	0.75	18" RCP
C2-C3	519.00	518.96	6	0.75	18" RCP
C3-C4	518.96	518.51	60	0.75	18" RCP

Drainage Structure Table

Structure	Top of Casting	Top of Grate	Invert	Description
A1	----	522.25	519.72	Single Inlet
B1	----	523.15	520.60	Area Drain
B2	----	523.00	520.10	Area Drain
B3	----	522.64	519.87	Area Drain
B4	----	522.64	519.36	Area Drain
C1	----	522.60	519.00	Area Drain
C2	----	522.60	519.00	Area Drain
C3	----	522.75	518.96	Area Drain
C4	----	----	518.51	Headwall
Det1	----	----	519.00	Water Quality Device
Det2	----	----	519.00	Water Quality Device

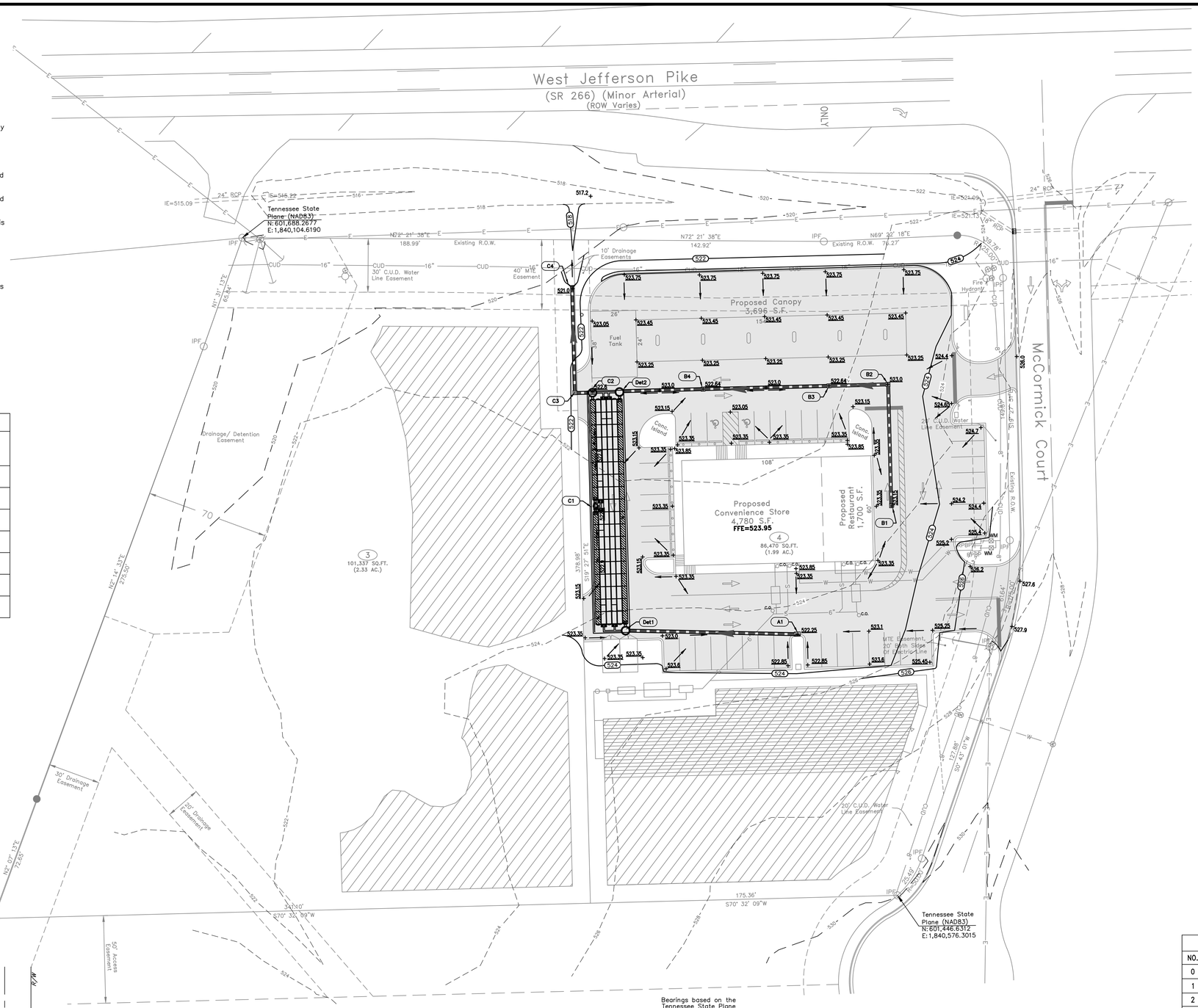

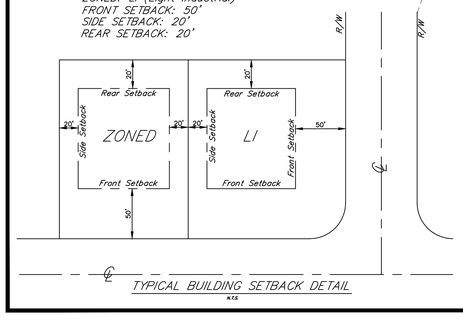

NOTE: ALL ABOVEGROUND OR UNDERGROUND TANKS WILL REQUIRE PERMITTING THROUGH THE FIRE MARSHAL'S OFFICE.

Bearings based on the Tennessee State Plane Coordinate System (NAD83)

LEGEND FOR MONUMENTS
- IRON PIN SET (1/2" rebar with HSENGR cap)
- IPF IRON PIN FND.
- RAILROAD SPIKE
- FENCE
- SURVEY POINT
- NAIL
- CONC. MARKER FND.
- UGC MARKER

Developer: Radhe Krishna Investment, LLC
Attn: Jaydev Patel
Address: 4801 Waterlook Way
Smyrna, TN 37167

Owner: RAM Properties
Address: P.O. Box 10989
Murfreesboro,TN 37129
Tax Map 26, Parcel 30.03
Record Book 1609, Page 1161

THIS TRACT IS NOT LOCATED IN AN AREA DESIGNATED AS "SPECIAL FLOOD HAZARD" ON THE NATIONAL FLOOD INSURANCE PROGRAM COMMUNITY MAP 470149, PANEL NO. 0131H, ZONE: X, DATED: JANUARY 05, 2007.

LEGEND

- Power Pole
- Existing Fire Hydrant
- Proposed Fire Hydrant
- Reducer
- Water Valve
- Concrete Thrust Block
- Existing Water Line
- Proposed Water Line
- Existing Sanitary Sewer Line
- Proposed Sanitary Sewer Line
- Existing Manhole
- Proposed Manhole
- Existing Contours
- Proposed Contours
- Gas Meter
- Existing Gas Line
- Proposed Gas Line
- Proposed Underground Electric Line
- **Proposed Underground Data Line Conduit**
- Proposed Underground Phone Line Conduit
- Power Pole Anchor
- Existing Spot Elevation
- Proposed Spot Elevation
- Existing Storm Line
- Proposed Storm Line
- CUD Water Meter
- Proposed Driveway Location

DRAWING REVISIONS

NO.	DATE	DESCRIPTION
0	06-10-25	ORIGINAL ISSUE
1	07-10-25	REVISED PER RCRPC COMMENTS
2	07-24-25	REVISED PER RCRPC COMMENTS
3	08-14-25	REVISED FOR SUBMITTALS FOR UTILITIES

08-14-25

HUDDLESTON-STEELE ENGINEERING, INC.
2115 N.W. BROAD STREET, MURFREESBORO, TN 37129
SURVEYING : 893 - 4084, FAX: 893 - 0080

DRAINAGE PLAN
SPEED TRACK MARKET

LOT 4 MCCORMICK COMMERCIAL SUBDIVISON
4435 W JEFFERSON PIKE, MURFREESBORO, TN
5TH CIVIL DISTRICT OF RUTHERFORD COUNTY, TENNESSEE

DATE: JUNE, 2025 | SCALE: 1"=30' | SHEET C2.2

S:\ACAD20\Civil 3D Projects\McCormick Subdivision\DWG\Site Plan May 2025.dwg, Drainage, 8/14/2025 1:31:20 PM, ACAD204

1.0 General

1.1 Scope: This work includes providing labor, equipment, materials, installation and maintenance services to complete all landscape installation as indicated in construction documents.

A. Providing and installing all plantings including trees, shrubs, ground cover, turf grass, planting soil mix and mulch

B. Guarantee Period: All landscape plant material shall remain alive and in healthy condition for one full year from time of final acceptance of completed work. Contractor shall replace any dead or unhealthy plant material during the one year guarantee period at no additional cost to the owner.

C. Specified Maintenance Period: Contractor shall fully maintain all landscape material for the duration of the project until final acceptance by the owner. This includes watering, weeding, fertilizing and mowing of grass and general upkeep of all landscape beds. Should any plant material be damaged die or defoliate during this period it shall be replaced immediately with plant material of the same size, species and quality as originally specified.

D. It is the responsibility of the landscape contractor to confirm all material quantities. In the event of a discrepancy, the quantities shown on the plan shall take precedence over the material schedule.

E. No substitutions as to type, size, or spacing of plant materials specified on this plan may be made without the approval of the landscape architect or owner's representative. All substitutions shall be reviewed and approved with the owner's representative and the applicable municipal or state reviewing agency.

F. Contractor shall be required to obtain all permits relative to landscape installation. Any work in municipal or state right of way or utility easements may require a permit from the governing agency.

1.2 Inspection and approval:

A. All plant material may be subject to inspection and approval by the landscape architect or the owners representative in the field or nursery before digging, or at the site before planting or placing or at any other time. Attach secure, durable, legible waterproof labels, stating correct botanical and common names as specified, to at least one shrub or perennial in a grouping and to each tree on site. All labels to be completely removed by contractor at time of final acceptance.

1.3 Job Conditions

A. Examine conditions under which work is to be performed and notify the Landscape Architect of unsatisfactory conditions or any potential field adjustments.Should the landscape contractor encounter unsatisfactory surface or other subsurface drainage conditions, inadequate soil depth, latent soils, hard pan, utility lines or other conditions that will jeopardize the health and vigor of the plants, adjustment must be made by the contractor to insure suitable conditions for proper growth and development of the plants to be installed.

B. Determine locations of underground utilities and perform work in manner which will avoid all possible damage. It is a requirement per the Tennessee "Underground Utility Damage Prevention Act" that anyone who engages in excavation must notify all known underground utility owners, no less than three nor more than ten working days of their intent to excavate. a list of these utilities may be obtained from the county register of deeds. those utilities that participate in the Tennessee one call system can be notified by calling 1-800-351-1111. Hand excavate to avoid damage to existing utilities if required.

C. Contractor to remove any debris on site and clear and grub all landscape planting areas prior to grading and planting as part of contract All planting and seeding areas shall be free from weeds prior to planting and mulching. No plant material shall be planted prior to completion of finish grade. Herbicide and or mechanical removal of weeds may be required to insure complete weed removal. Any herbicide applications must be done a minimum of 2 weeks or more prior to time of planting..

2.0 Materials

2.1 Topsoil:

A. All topsoil shall be stripped and stored for reuse on site prior to grading and excavation work.

B. Topsoil stripped and stored on site, or hauled in for use on site shall meet the following criteria before being spread on site or used in landscape beds or planting mix.

1) To be Fertile, friable naturally occurring topsoil, free of stones, subsoil, clay lumps, hardpan, roots, stumps, branches sticks and other debris larger than one and one half inch in any dimension, free of noxious weeds, grasses, seeds, plants, extraneous matter and any substance harmful to plant growth:

2) Ph range of 5.5 to 7.0

3) Organic matter 5% to 10%

4) Topsoil shall contain a maximum of 35% clay

5) Topsoil shall contain a minimum of 20% sand

2.2 Planting Mix: Shall be thoroughly mixed in proportions specified for plant pits and planting beds

A. 40% Approved material excavated from the pits (if rock or heavy clay is encountered provide 70% topsoil in mix)

B. 30% Topsoil (as defined in 2.1 herein)

C. 30% Organic compost consisting of peat moss, mushroom compost or worm castings. All organic compost must be well aged. No raw wood or other unaged material shall be permitted a part of compost blend.

D. Add 3 lbs of 6-12-12 fertilizer to each cubic yard of topsoil mix during the mixing process, for all plants.

E. All planting mix shall be inoculated with a mycorrhizal fungal product. Mycorrhiza inoculation may be applied with a powder or liquid application. Follow manufacturers directions for proper amount and methods of application.

2.3 Trees:

A. Shall conform to state and federal requirements for disease and insect control, shall be in accordance with American Standard for Nursery Stock, ANSI Z-60.1 (latest approved edition) and shall be subject to approval of owner's representative. Dimensions listed for heights, spread and trunk specifications on the plant material schedule are a guide for the minimum required size of each plant.

B. All plant material must be free from bark damage, well foliated and have a well established root system, without circling roots or root bound pots.

C. First class representatives of their species or variety and true to name and size. Plants that are not of highest quality will be rejected. All plants shall have a well-formed canopy (head) with minimum caliper, height and spread as shown on the plant list. Trunks and canopy shall be shaped be typical of the species. Trees of the same species shall have the following characteristics: matched by branching height, caliper, height of tree, spread of branches and branching structure, and overall canopy shape.

2.6 Seed: Seed shall be delivered to site in original sealed packages bearing the producers guaranteed analysis for percentages of mixtures, purity, germination, weedseed content and inert material. All seed must be fresh, clean and from current seasons seed crop.

A. Variety: Premium Tall Fescue blend (drought tolerant variety)

B. Purity: 90% minimum

C. Percent Germination: 90% minimum

D. Maximum weed seed content: 0.5%

2.7 Sod: Sod shall be premium Bermuda grass. Sod shall strongly rooted and free of weeds, disease and pests. All sod shall be cut and delivered with uniform thickness with no less than 1" soil.

2.8 Mulch: 100% Shredded and Aged Hardwood Mulch or Pine Straw (owners choice as specified on plans) to cover all tree, plant and ground cover pits and landscape beds.

2.9 Fertilizer: Fertilizer shall have a ratio of 6% nitrogen, 12% phosphorus and 12% potassium. Fertilizer shall be granular and mixed into planting mix at the rates as specified in 2.2 herein and at the manufacturers rate for turf grass areas.

3.0 Execution

3.1 Finish Grade and Landscape Bed Preperation

A. Finish grading to be completed by General Contractor. Fine grade soil to eliminate irregularities and ponding from finish grades and to form smooth, consistent grade with positive drainage away from all buildings and structures. All landscape beds are to be tilled to a minimum depth of 8" and covered with fertile topsoil to a minimum depth of 4".

3.2 Topsoil Placement

A. Finish grading to be completed by General Contractor. Fine grade soil to eliminate irregularities and ponding from finish grades and to form smooth, consistent grade with positive drainage away from all buildings and structures.

B. If planting and mulching is not commenced immediately, protect spread topsoil from erosion by force of wind, water or other force, and reestablish eroded, rutted or settled grades to proper finished grade.

C. Spreading of topsoil: All landscape beds and turf grass areas shall have a minimum depth of 4" of topsoil established prior to planting, seeding, sodding or mulching. All topsoil stripped from the site shall be utilized on site to establish the 4" minimum depth required for landscape areas. All excess topsoil beyond the 4" minimum depth shall be evenly spread throughout landscape and turf grass planting areas.

3.3 Planting of Trees, Shrubs and Ground Cover

A. Do not prune plants without direction and approval of Landscape Architect.

B. Prepare planting mix as specified in 2.2 herein. Place as backfill for all trees, shrubs, and ground cover beds as drawn and detailed.

C. Plant all material as drawn and detailed.

D. Tree Pit Drainage: All trees and shrubs shall be placed in well drained planting pits. If standing water occurs in planting holes the contractor shall provide proper subsurface drainage to insure the plants survival and / or plant material shall be placed in elevated bermed areas to provide proper aeration of root balls.

E. All trees are to be equipped with 20 gallon capacity watering bags to be used during the construction period and left in place for the owners use after final acceptance of the project.

F. If rock is encountered during planting operations, landscape berms or alternated planting locations should be evaluated by landscape architect prior to planting.

G. It is the responsibility of the landscape contractor to verify that each excavated tree or shrub pit will percolate (drain) prior to adding topsoil and installing trees or shrubs. If the soil at a given area does not drain properly, a p v c drain or gravel sump shall be installed, or plantings shall be placed on a berm of planting mix to keep plants out of standing water.

3.4 Seed: Provide an acceptable stand of seed, defined as no bare areas more than 4" square. Provide seed bed preparation with fertilizer, limestone and straw mulch. Maintain seeded areas until final acceptance by Owner or owners representative. Grass shall have at least one mowing before receiving final acceptance.

3.5 Sod

A. Sod shall be installed within 24 hours of delivery to site. No sod shall remain on pallets for longer than 24 hours after delivery.

B. All areas to receive sod shall be racked to finish grade to eliminate irregularities and ponding and to form smooth, consistent grade with positive drainage. Prepare topsoil with lime and fertilizer as needed.

C. All areas to receive sod shall be racked free of all rocks and debris prior to sod placement.

D. Areas to receive sod shall be slightly moistened immediately prior to laying sod. Sod shall be watered thoroughly after laying.

E. Lay sod tightly with no visible open joints and no overlapping between sod panels. Stagger end joints a minimum of 12". Cut sections of sod should be uniform and should not exceed 2 feet in width and 10 feet in length.

F. Roll sod after sod has dried from watering to insure a good bond between sod and soil and to level sod areas. Roller shall not exceed 150 lbs.

3.6 Establishment of grass: All distrubed areas of the site are to be seeded and/or sodded to insure protection from erosion and to insure a well established stand of turf grass with no bare patches of exposed soil.

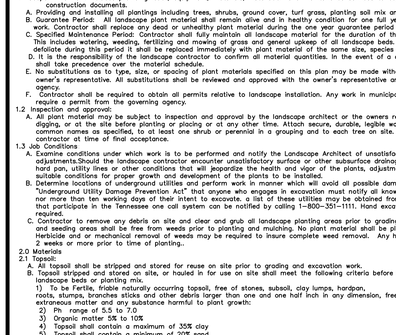

NOTES:
1. TREE SHALL BEAR SAME RELATION TO FINISHED GRADE AFTER SETTLEMENT AS IT BORE TO PREVIOUS GRADE.
2. TREE SHALL STAND PLUMB.
3. DO NOT DAMAGE ROOTS OR DESTROY ROOT BALL WHEN INSTALLING TREE STAKE
4. STAKING GUY WIRE TO BE REMOVED AT THE END OF THE GUARANTEE PERIOD.

TREE PLANTING DETAIL

NTS

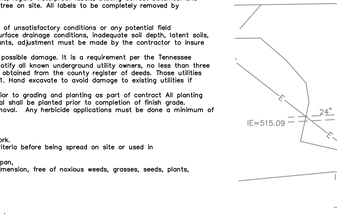

NOTES:
1. TREE SHALL BEAR SAME RELATION TO FINISHED GRADE AFTER SETTLEMENT AS IT BORE TO PREVIOUS GRADE.
2. TREE SHALL STAND PLUMB.
3. DO NOT DAMAGE ROOTS OR DESTROY ROOT BALL WHEN INSTALLING TREE STAKE
4. STAKING GUY WIRE TO BE REMOVED AT THE END OF THE GUARANTEE PERIOD.

CONIFER PLANTING DETAIL

NTS

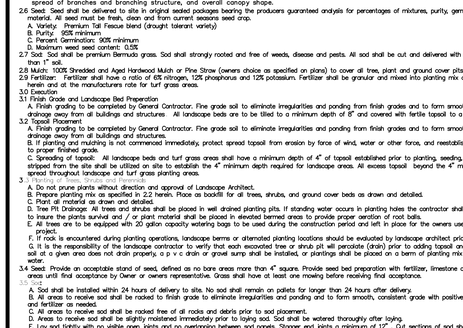

TYPICAL BUILDING SETBACK DETAIL

n.t.s.

Plant Material Schedule

SYMBOL	QTY	COMMON NAME	BOTANICAL NAME	SPECIFICATION	MINIMUM HEIGHT	NOTES
TREES						
	7	Red Maple	Acer rubrum	4" Caliper	12' Height.	7' Clear Trunk, Single -Straight Central Leader, Evenly Branched, Full Symmetrical Crown, Street Tree Quality, Matched
	7	Green Giant Arborvitea	Thuja 'Green Giant' Arborvitea		6' Height	Full Symmetrical Shape
	6	Red Crepe Myrtle	Lagerstroemia indica		6' Height	Full Symmetrical Shape
	3	Eastern Redbud	Cercis anadensis		6' Height	Full Symmetrical Shape
SHRUBS						
	36	Dwarf Nandina	Nandina domestica 'Fire Power'		36" Height	Full Symmetrical Shape
	46	Dwarf Buford Holly	Ilex cornuta 'Dwarf Buford'		36" Height	Full Symmetrical Shape

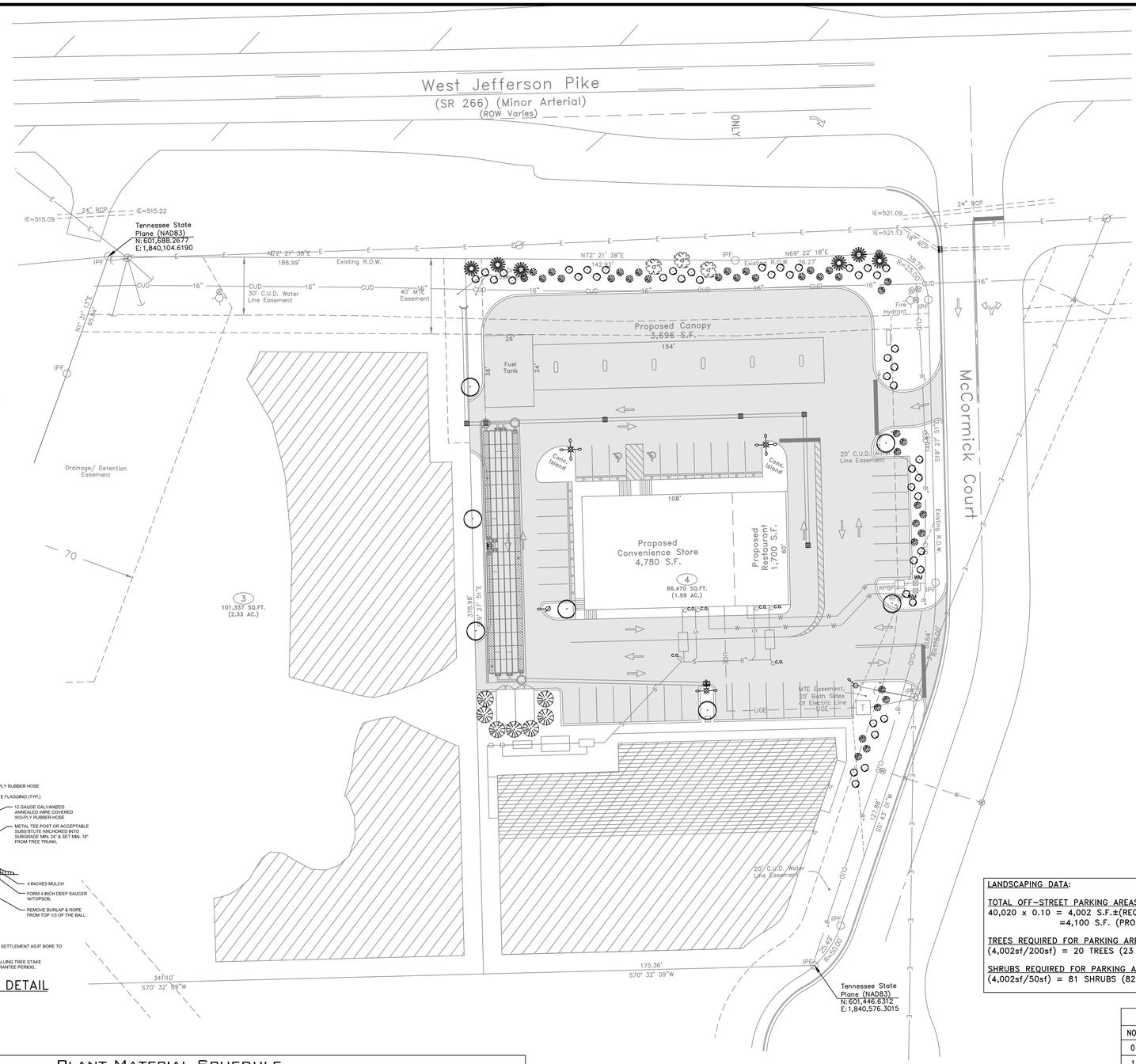

Bearings based on the Tennessee State Plane Coordinate System (NAD83)

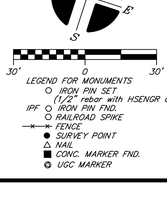

Developer: Radhe Krishna Investment, LLC
Attn: Jaydev Patel
Address: 4801 Waterlook Way
Smyrna, TN 37167

Owner: RAM Properties
Address: P.O. Box 10989
Murfreesboro,TN 37129
Tax Map 26, Parcel 30.03
Record Book 1609, Page 1161

THIS TRACT IS NOT LOCATED IN AN AREA DESIGNATED AS "SPECIAL FLOOD HAZARD" ON THE NATIONAL FLOOD INSURANCE PROGRAM COMMUNITY MAP 470149, PANEL NO. 0131H, ZONE: X, DATED: JANUARY 05, 2007.

LEGEND

- Power Pole
- Existing Fire Hydrant
- Proposed Fire Hydrant
- Reducer
- Water Valve
- Concrete Thrust Block
- —W— Existing Water Line
- —W— Proposed Water Line
- —S— Existing Sanitary Sewer Line
- —S— Proposed Sanitary Sewer Line
- Existing Manhole
- Proposed Manhole
- —00— Existing Contours
- —00— Proposed Contours
- Gas Meter
- —G— Existing Gas Line
- —G— Proposed Gas Line
- —U/E— Proposed Underground Electric Line
- —D— Proposed Underground Data Line Conduit
- —P— Proposed Underground Phone Line Conduit
- Power Pole Anchor
- 698.7+ Existing Spot Elevation
- 698.7+ Proposed Spot Elevation
- Existing Storm Line
- Proposed Storm Line
- CUD Water Meter
- Proposed Driveway Location

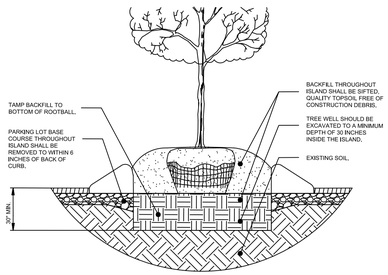

NOTE:
ANY UTILITY STRUCTURE, LIGHT POLES, SIGN, OR OTHER FEATURE MAY NOT BE ADDED TO ANY REQUIRED LANDSCAPE ISLAND IN SUCH A MANNER THAT IT WOULD OBSTRUCT THE REQUIRED LANDSCAPE ELEMENT(S) (TREES, SHRUBS, ETC)

ISLAND PLANTING

NTS

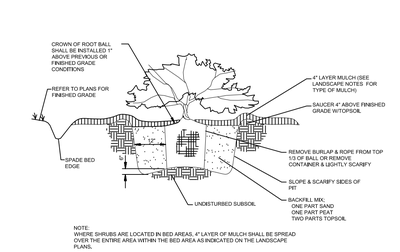

NOTE:
WHERE SHRUBS ARE LOCATED IN BED AREAS, 4" LAYER OF MULCH SHALL BE SPREAD OVER THE ENTIRE AREA WITHIN THE BED AREA AS INDICATED ON THE LANDSCAPE PLANS.

SHRUB PLANTING DETAIL

NTS

LANDSCAPING DATA:

TOTAL OFF-STREET PARKING AREAS:
40,020 x 0.10 = 4,002 S.F.±(REQUIRED)
=4,100 S.F. (PROPOSED)

TREES REQUIRED FOR PARKING AREAS:
(4,002sf/200sf) = 20 TREES (23 PROPOSED)

SHRUBS REQUIRED FOR PARKING AREAS:
(4,002sf/50sf) = 81 SHRUBS (82 PROPOSED)

DRAWING REVISIONS

NO.	DATE	DESCRIPTION
0	06-10-25	ORIGINAL ISSUE
1	07-10-25	REVISED PER RCRPC COMMENTS
2	07-24-25	REVISED PER RCRPC COMMENTS
3	08-14-25	REVISED FOR SUBMITTALS FOR UTILITIES

CHRISTOPHER D. HUDDLESTON — REGISTERED — LANDSCAPE ARCHITECT — No. 122187 — STATE OF TENNESSEE
08-14-25

HUDDLESTON-STEELE ENGINEERING, INC.
2115 N.W. BROAD STREET, MURFREESBORO, TN 37129
SURVEYING : 893 - 4084, FAX: 893 - 0080

LANDSCAPE PLAN
SPEED TRACK MARKET

LOT 4 McCORMICK COMMERCIAL SUBDIVISON
4435 W JEFFERSON PIKE, MURFREESBORO, TN
5TH CIVIL DISTRICT OF RUTHERFORD COUNTY, TENNESSEE

DATE: JUNE, 2025 | SCALE: 1"=30' | SHEET C3.0

S:\ACAD20\Civil 3D Projects\McCormick Subdivision\DWG\Site Plan May 2025.dwg, Landscape Plan, 8/14/2025 1:30:29 PM, ACAD204

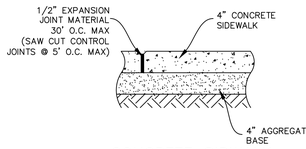

CONCRETE SIDWALK CROSS SECTION DETAIL

N.T.S.

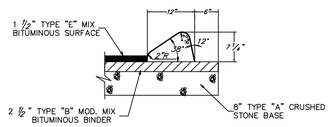

EXTRUDED MOUNTABLE CONCRETE CURB

N.T.S.

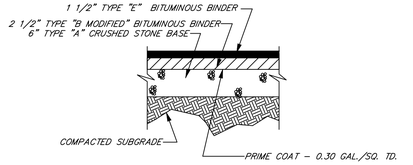

PAVING SECTION

N.T.S.

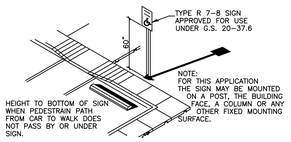

H.C. SIGN AND RAMP DETAILS

N.T.S.

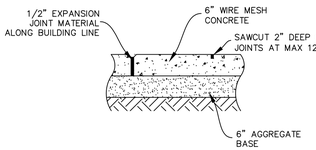

CONCRETE DETAIL

N.T.S.

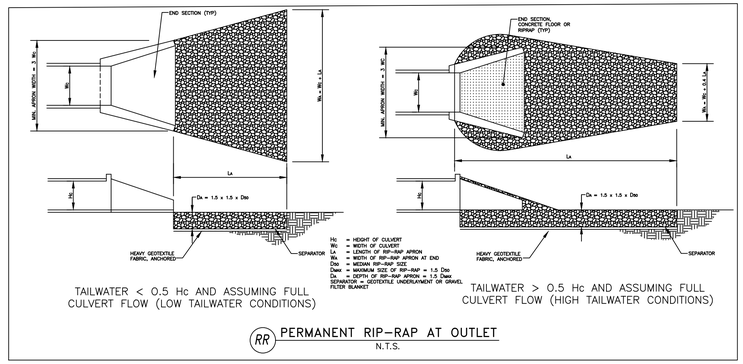

TAILWATER < 0.5 Hc AND ASSUMING FULL CULVERT FLOW (LOW TAILWATER CONDITIONS)

TAILWATER > 0.5 Hc AND ASSUMING FULL CULVERT FLOW (HIGH TAILWATER CONDITIONS)

RR PERMANENT RIP-RAP AT OUTLET

N.T.S.

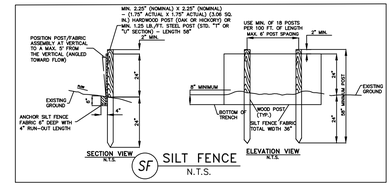

SF SILT FENCE

N.T.S.

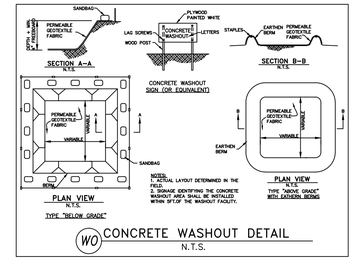

WO CONCRETE WASHOUT DETAIL

N.T.S.

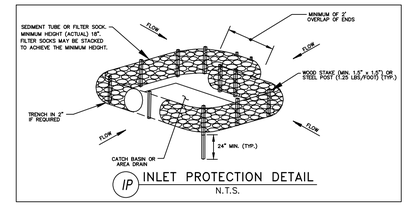

IP INLET PROTECTION DETAIL

N.T.S.

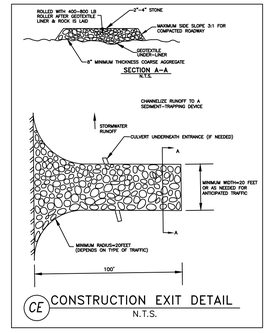

CE CONSTRUCTION EXIT DETAIL

N.T.S.

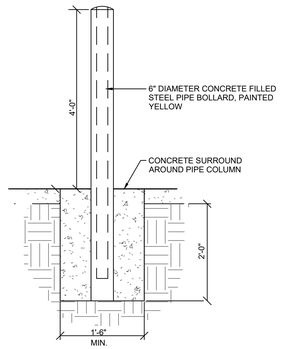

BOLLARD DETAIL

N.T.S.

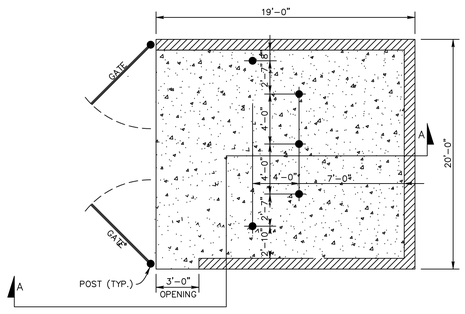

ENCLOSED DUMPSTER PAD W/ WALK THRU & GATE

N.T.S.

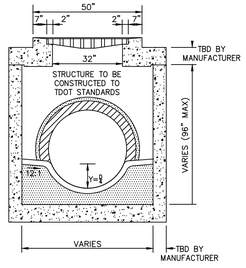

AREA DRAIN DETAIL

N.T.S.

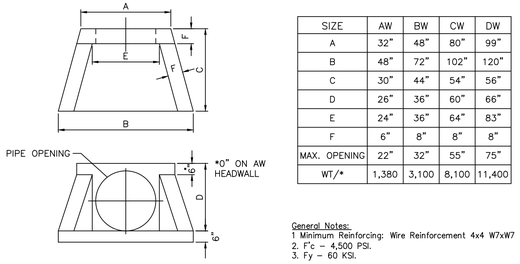

SIZE	AW	BW	CW	DW
A	32"	48"	80"	99"
B	48"	72"	102"	120"
C	30"	44"	54"	56"
D	26"	36"	60"	66"
E	24"	36"	64"	83"
F	6"	8"	8"	8"
MAX. OPENING	22"	32"	55"	75"
WT/*	1,380	3,100	8,100	11,400

General Notes:
1 Minimum Reinforcing: Wire Reinforcement 4x4 W7xW7
2. F'c – 4,500 PSI.
3. Fy – 60 KSI.

CONCRETE HEADWALL DETAIL

N.T.S.

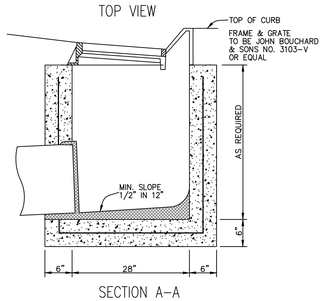

SINGLE CATCH BASIN DETAIL

N.T.S.

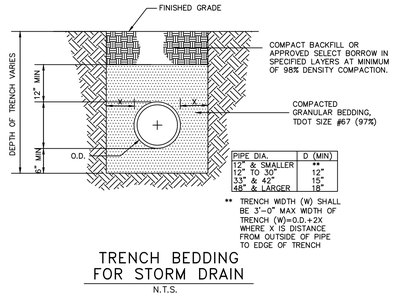

TRENCH BEDDING FOR STORM DRAIN

N.T.S.

DRAWING REVISIONS		
NO.	DATE	DESCRIPTION
0	06-10-25	ORIGINAL ISSUE
1	07-10-25	REVISED PER RCRPC COMMENTS
2	07-24-25	REVISED PER RCRPC COMMENTS



SHUDDLESTON-STEELE ENGINEERING, INC.
2115 N.W. BROAD STREET, MURFREESBORO, TN 37129
SURVEYING : 893 – 4084, FAX: 893 – 0080

DETAILS
SPEED TRACK MARKET

LOT 4 MCCORMICK COMMERCIAL SUBDIVISON
4435 W JEFFERSON PIKE, MURFREESBORO, TN
5TH CIVIL DISTRICT OF RUTHERFORD COUNTY, TENNESSEE

DATE: JUNE, 2025 | SCALE: 1"=30' | SHEET C4.0

S:\ACAD20#\Civil 3D Projects\McCormick Subdivision\DWG\Site Plan May 2025.dwg, Details, 7/24/2025 7:34:06 AM, ACAD204

CONCEPTUAL LAYOUT

106	STORMTECH SC-310 CHAMBERS
16	STORMTECH SC-310 END CAPS
6	STONE ABOVE (in)
6	STONE BELOW (in)
40	% STONE VOID
2,886	SYSTEM AREA (ft²)
319	SYSTEM PERIMETER (ft)

CONCEPTUAL ELEVATIONS

528.33	MAXIMUM ALLOWABLE GRADE (TOP OF PAVEMENT/UNPAVED)
522.16	MINIMUM ALLOWABLE GRADE (UNPAVED WITH TRAFFIC)
521.66	MINIMUM ALLOWABLE GRADE (UNPAVED NO TRAFFIC)
521.66	MINIMUM ALLOWABLE GRADE (BASE OF FLEXIBLE PAVEMENT)
521.66	MINIMUM ALLOWABLE GRADE (TOP OF RIGID PAVEMENT)
520.83	TOP OF STONE
520.33	TOP OF SC-310 CHAMBER
519.29	8" TOP MANIFOLD INVERT
519.08	12" ISOLATOR ROW PLUS CONNECTION INVERT
519.00	BOTTOM OF SC-310 CHAMBER
518.50	UNDERDRAIN INVERT
518.50	BOTTOM OF STONE

*INVERT ABOVE BASE OF CHAMBER

PART TYPE	ITEM ON LAYOUT	DESCRIPTION	INVERT*	MAX FLOW
PRE-CORED END CAP	A	8" TOP PRE-CORED END CAP, PART#: SC310EPE08TPC / TYP OF ALL 8" TOP CONNECTIONS	3.50"	
PREFABRICATED EZ END CAP	B	12" BOTTOM PREFABRICATED EZ END CAP, PART#: SC310ECEZ / TYP OF ALL 12" BOTTOM CONNECTIONS AND ISOLATOR PLUS ROWS	0.90"	
FLAMP	C	INSTALL FLAMP ON 12" ACCESS PIPE / PART#: SC31012RAMP (TYP 4 PLACES)		
MANIFOLD	D	8" x 8" TOP MANIFOLD, MOLDED FITTINGS	3.50"	
MANIFOLD	E	8" x 8" TOP MANIFOLD, MOLDED FITTINGS	3.50"	1.7 CFS IN
CONCRETE STRUCTURE	F	(DESIGN BY ENGINEER / PROVIDED BY OTHERS)		1.7 CFS IN
CONCRETE STRUCTURE	G	(DESIGN BY ENGINEER / PROVIDED BY OTHERS)		0.7 CFS OUT
CONCRETE STRUCTURE	H	(DESIGN BY ENGINEER / PROVIDED BY OTHERS)		
NYLOPLAST (INLET W/ ISO PLUS ROW)	I	30" DIAMETER (24.00" SUMP MIN)		1.7 CFS IN
UNDERDRAIN	K	4" ADS N-12 DUAL WALL PERFORATED HDPE UNDERDRAIN		
INSPECTION PORT	L	6" SEE DETAIL (TYP 3 PLACES)		
FLAP GATE	M	4" ON UNDERDRAIN AT STRUCTURE (DESIGN BY ENGINEER / PROVIDED BY OTHERS)		
MANIFOLD	N	8" x 8" TOP MANIFOLD, MOLDED FITTINGS	3.50"	

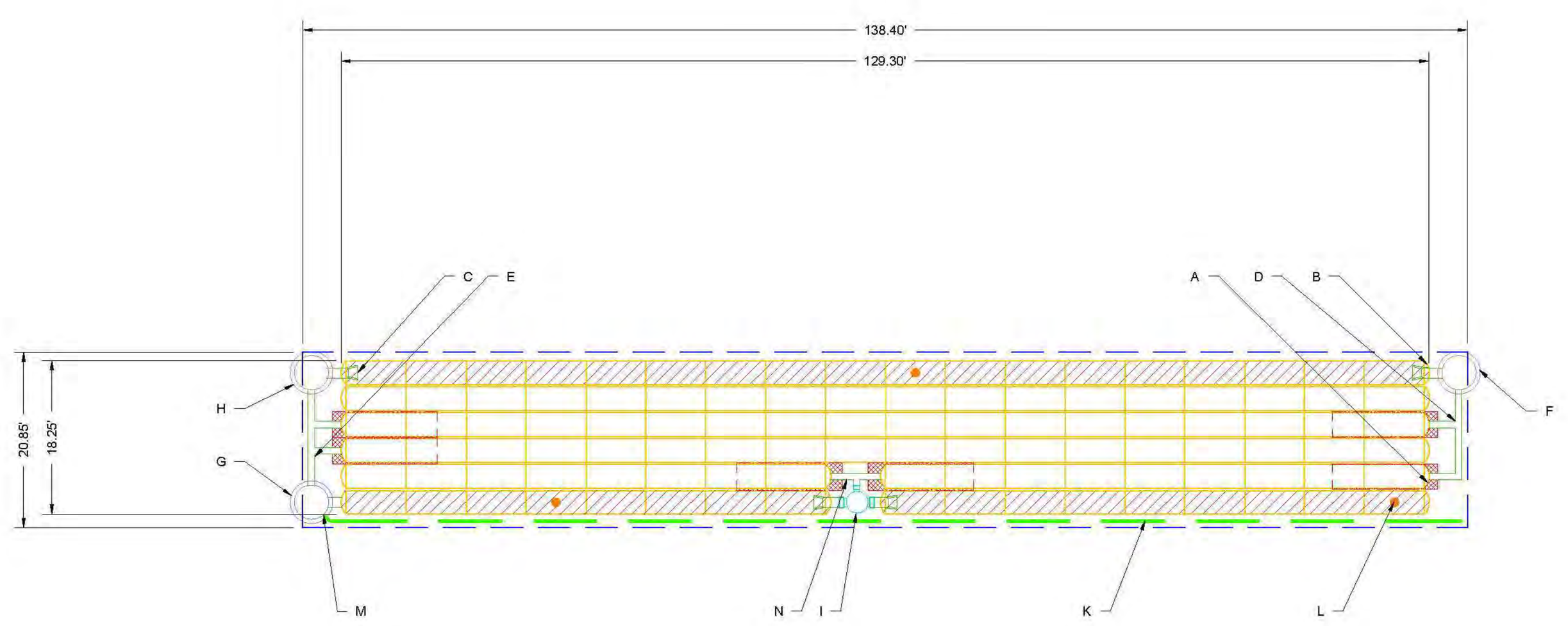

ISOLATOR ROW PLUS (SEE DETAIL)

PLACE MINIMUM 12.50' OF ADSPLUS625 WOVEN GEOTEXTILE OVER BEDDING STONE AND UNDERNEATH CHAMBER FEET FOR SCOUR PROTECTION AT ALL CHAMBER INLET ROWS

BED LIMITS

NOTES

- THE SITE DESIGN ENGINEER MUST REVIEW ELEVATIONS AND IF NECESSARY ADJUST GRADING TO ENSURE THE CHAMBER COVER REQUIREMENTS ARE MET.
- THE STORMTECH SYSTEM DEPICTED DOES NOT CONTAIN PROPER WATER QUALITY MEASURES. ABSENCE OF WATER QUALITY MEASURES CAN RESULT IN UNTREATED STORMWATER. ADS RECOMMENDS THE USE OF ISOLATOR ROW PLUS AND AN UPSTREAM HIGH FLOW BYPASS ON ALL STORMTECH SYSTEMS TO PROPERLY DIRECT THE FIRST FLUSH.
- **NOT FOR CONSTRUCTION**: THIS LAYOUT IS FOR DIMENSIONAL PURPOSES ONLY TO PROVE CONCEPT & THE REQUIRED STORAGE VOLUME CAN BE ACHIEVED ON SITE.

SPEED TRACK MARKET
MURFREESBORO, TN, USA
DATE: 07/08/2025 | DRAWN: DH
PROJECT #: S478799 | CHECKED: RWD

DATE	DWN	CHK

StormTech® Chamber System

4640 TRUEMAN BLVD
HILLIARD, OH 43026
1-800-733-7473

ADS

SHEET 2 OF 6

ACCEPTABLE FILL MATERIALS: STORMTECH SC-310 CHAMBER SYSTEMS

	MATERIAL LOCATION	DESCRIPTION	AASHTO MATERIAL CLASSIFICATIONS	COMPACTION / DENSITY REQUIREMENT
D	**FINAL FILL:** FILL MATERIAL FOR LAYER 'D' STARTS FROM THE TOP OF THE 'C' LAYER TO THE BOTTOM OF FLEXIBLE PAVEMENT OR UNPAVED FINISHED GRADE ABOVE. NOTE THAT PAVEMENT SUBBASE MAY BE PART OF THE 'D' LAYER.	ANY SOIL/ROCK MATERIALS, NATIVE SOILS, OR PER ENGINEER'S PLANS. CHECK PLANS FOR PAVEMENT SUBGRADE REQUIREMENTS.	N/A	PREPARE PER SITE DESIGN ENGINEER'S PLANS. PAVED INSTALLATIONS MAY HAVE STRINGENT MATERIAL AND PREPARATION REQUIREMENTS.
C	**INITIAL FILL:** FILL MATERIAL FOR LAYER 'C' STARTS FROM THE TOP OF THE EMBEDMENT STONE ('B' LAYER) TO 18" (460 mm) ABOVE THE TOP OF THE CHAMBER. NOTE THAT PAVEMENT SUBBASE MAY BE A PART OF THE 'C' LAYER.	GRANULAR WELL-GRADED SOIL/AGGREGATE MIXTURES, <35% FINES OR PROCESSED AGGREGATE. MOST PAVEMENT SUBBASE MATERIALS CAN BE USED IN LIEU OF THIS LAYER.	AASHTO M145[1] A-1, A-2-4, A-3 OR AASHTO M43[1] 3, 357, 4, 467, 5, 56, 57, 6, 67, 68, 7, 78, 8, 89, 9, 10	BEGIN COMPACTIONS AFTER 12" (300 mm) OF MATERIAL OVER THE CHAMBERS IS REACHED. COMPACT ADDITIONAL LAYERS IN 6" (150 mm) MAX LIFTS TO A MIN. 95% PROCTOR DENSITY FOR WELL GRADED MATERIAL AND 95% RELATIVE DENSITY FOR PROCESSED AGGREGATE MATERIALS. ROLLER GROSS VEHICLE WEIGHT NOT TO EXCEED 12,000 lbs (53 kN). DYNAMIC FORCE NOT TO EXCEED 20,000 lbs (89 kN).
B	**EMBEDMENT STONE:** FILL SURROUNDING THE CHAMBERS FROM THE FOUNDATION STONE ('A' LAYER) TO THE 'C' LAYER ABOVE.	CLEAN, CRUSHED, ANGULAR STONE OR RECYCLED CONCRETE5	AASHTO M43[1] 3, 357, 4, 467, 5, 56, 57	NO COMPACTION REQUIRED.
A	**FOUNDATION STONE:** FILL BELOW CHAMBERS FROM THE SUBGRADE UP TO THE FOOT (BOTTOM) OF THE CHAMBER.	CLEAN, CRUSHED, ANGULAR STONE OR RECYCLED CONCRETE5	AASHTO M43[1] 3, 357, 4, 467, 5, 56, 57	PLATE COMPACT OR ROLL TO ACHIEVE A FLAT SURFACE.[2,3]

PLEASE NOTE:
1. THE LISTED AASHTO DESIGNATIONS ARE FOR GRADATIONS ONLY. THE STONE MUST ALSO BE CLEAN, CRUSHED, ANGULAR. FOR EXAMPLE, A SPECIFICATION FOR #4 STONE WOULD STATE: "CLEAN, CRUSHED, ANGULAR NO. 4 (AASHTO M43) STONE".
2. STORMTECH COMPACTION REQUIREMENTS ARE MET FOR 'A' LOCATION MATERIALS WHEN PLACED AND COMPACTED IN 6" (150 mm) (MAX) LIFTS USING TWO FULL COVERAGES WITH A VIBRATORY COMPACTOR.
3. WHERE INFILTRATION SURFACES MAY BE COMPROMISED BY COMPACTION, FOR STANDARD DESIGN LOAD CONDITIONS, A FLAT SURFACE MAY BE ACHIEVED BY RAKING OR DRAGGING WITHOUT COMPACTION EQUIPMENT. FOR SPECIAL LOAD DESIGNS, CONTACT STORMTECH FOR COMPACTION REQUIREMENTS.
4. ONCE LAYER 'C' IS PLACED, ANY SOIL/MATERIAL CAN BE PLACED IN LAYER 'D' UP TO THE FINISHED GRADE. MOST PAVEMENT SUBBASE SOILS CAN BE USED TO REPLACE THE MATERIAL REQUIREMENTS OF LAYER 'C' OR 'D' AT THE SITE DESIGN ENGINEER'S DISCRETION.
5. WHERE RECYCLED CONCRETE AGGREGATE IS USED IN LAYERS 'A' OR 'B' THE MATERIAL SHOULD ALSO MEET THE ACCEPTABILITY CRITERIA OUTLINED IN TECHNICAL NOTE 6.20 "RECYCLED CONCRETE STRUCTURAL BACKFILL".

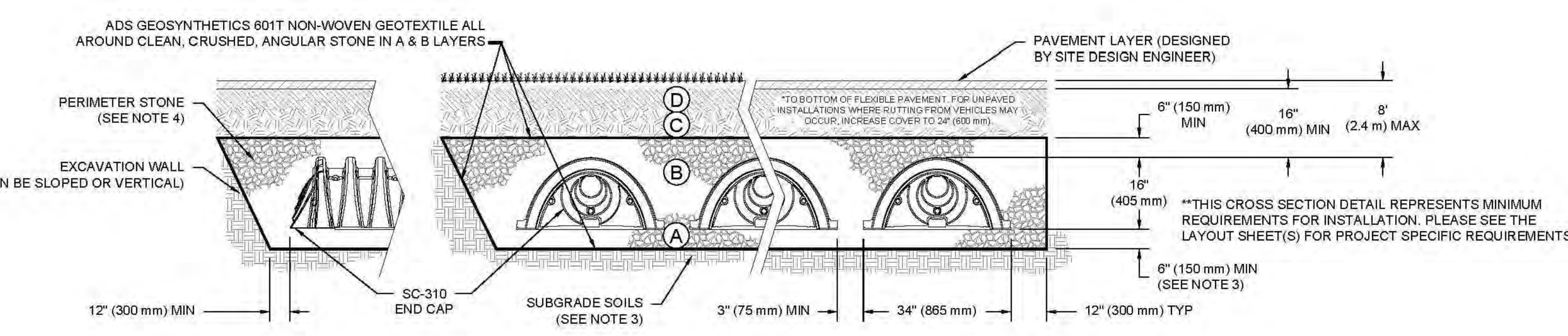

NOTES:

1. CHAMBERS SHALL MEET THE REQUIREMENTS OF ASTM F2922 (POLETHYLENE) OR ASTM F2418 (POLYPROPYLENE), "STANDARD SPECIFICATION FOR CORRUGATED WALL STORMWATER COLLECTION CHAMBERS".
2. SC-310 CHAMBERS SHALL BE DESIGNED IN ACCORDANCE WITH ASTM F2787 "STANDARD PRACTICE FOR STRUCTURAL DESIGN OF THERMOPLASTIC CORRUGATED WALL STORMWATER COLLECTION CHAMBERS".
3. THE SITE DESIGN ENGINEER IS RESPONSIBLE FOR ASSESSING THE BEARING RESISTANCE (ALLOWABLE BEARING CAPACITY) OF THE SUBGRADE SOILS AND THE DEPTH OF FOUNDATION STONE WITH CONSIDERATION FOR THE RANGE OF EXPECTED SOIL MOISTURE CONDITIONS. REFERENCE STORMTECH DESIGN MANUAL FOR BEARING CAPACITY GUIDANCE.
4. PERIMETER STONE MUST BE EXTENDED HORIZONTALLY TO THE EXCAVATION WALL FOR BOTH VERTICAL AND SLOPED EXCAVATION WALLS.
5. REQUIREMENTS FOR HANDLING AND INSTALLATION:
   - TO MAINTAIN THE WIDTH OF CHAMBERS DURING SHIPPING AND HANDLING, CHAMBERS SHALL HAVE INTEGRAL, INTERLOCKING STACKING LUGS.
   - TO ENSURE A SECURE JOINT DURING INSTALLATION AND BACKFILL, THE HEIGHT OF THE CHAMBER JOINT SHALL NOT BE LESS THAN 2".
   - TO ENSURE THE INTEGRITY OF THE ARCH SHAPE DURING INSTALLATION, a) THE ARCH STIFFNESS CONSTANT SHALL BE GREATER THAN OR EQUAL TO 325 LBS/FT/%. THE ASC IS DEFINED IN SECTION 6.2.8 OF ASTM F2418. AND b) TO RESIST CHAMBER DEFORMATION DURING INSTALLATION AT ELEVATED TEMPERATURES (ABOVE 73° F / 23° C), CHAMBERS SHALL BE PRODUCED FROM REFLECTIVE GOLD OR YELLOW COLORS.

SPEED TRACK MARKET
MURFREESBORO, TN, USA
DATE: 07/08/2025 | DRAWN: DH
PROJECT #: S478799 | CHECKED: RWD

StormTech® Chamber System

4640 TRUEMAN BLVD
HILLIARD, OH 43026
1-800-733-7473

SHEET 3 OF 6

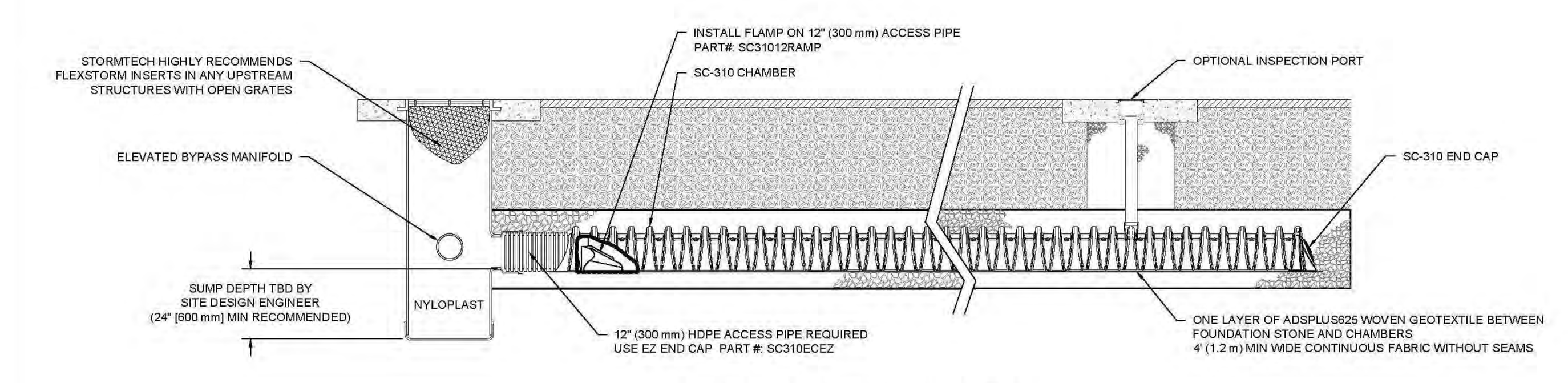

SC-310 ISOLATOR ROW PLUS DETAIL
NTS

INSPECTION & MAINTENANCE

STEP 1) INSPECT ISOLATOR ROW PLUS FOR SEDIMENT
- A. INSPECTION PORTS (IF PRESENT)
  - A.1. REMOVE/OPEN LID ON NYLOPLAST INLINE DRAIN
  - A.2. REMOVE AND CLEAN FLEXSTORM FILTER IF INSTALLED
  - A.3. USING A FLASHLIGHT AND STADIA ROD, MEASURE DEPTH OF SEDIMENT AND RECORD ON MAINTENANCE LOG
  - A.4. LOWER A CAMERA INTO ISOLATOR ROW PLUS FOR VISUAL INSPECTION OF SEDIMENT LEVELS (OPTIONAL)
  - A.5. IF SEDIMENT IS AT, OR ABOVE, 3" (80 mm) PROCEED TO STEP 2. IF NOT, PROCEED TO STEP 3.
- B. ALL ISOLATOR PLUS ROWS
  - B.1. REMOVE COVER FROM STRUCTURE AT UPSTREAM END OF ISOLATOR ROW PLUS
  - B.2. USING A FLASHLIGHT, INSPECT DOWN THE ISOLATOR ROW PLUS THROUGH OUTLET PIPE
    - i) MIRRORS ON POLES OR CAMERAS MAY BE USED TO AVOID A CONFINED SPACE ENTRY
    - ii) FOLLOW OSHA REGULATIONS FOR CONFINED SPACE ENTRY IF ENTERING MANHOLE
  - B.3. IF SEDIMENT IS AT, OR ABOVE, 3" (80 mm) PROCEED TO STEP 2. IF NOT, PROCEED TO STEP 3.

STEP 2) CLEAN OUT ISOLATOR ROW PLUS USING THE JETVAC PROCESS
- A. A FIXED CULVERT CLEANING NOZZLE WITH REAR FACING SPREAD OF 45" (1.1 m) OR MORE IS PREFERRED
- B. APPLY MULTIPLE PASSES OF JETVAC UNTIL BACKFLUSH WATER IS CLEAN
- C. VACUUM STRUCTURE SUMP AS REQUIRED

STEP 3) REPLACE ALL COVERS, GRATES, FILTERS, AND LIDS; RECORD OBSERVATIONS AND ACTIONS.

STEP 4) INSPECT AND CLEAN BASINS AND MANHOLES UPSTREAM OF THE STORMTECH SYSTEM.

NOTES

1. INSPECT EVERY 6 MONTHS DURING THE FIRST YEAR OF OPERATION. ADJUST THE INSPECTION INTERVAL BASED ON PREVIOUS OBSERVATIONS OF SEDIMENT ACCUMULATION AND HIGH WATER ELEVATIONS.
2. CONDUCT JETTING AND VACTORING ANNUALLY OR WHEN INSPECTION SHOWS THAT MAINTENANCE IS NECESSARY.

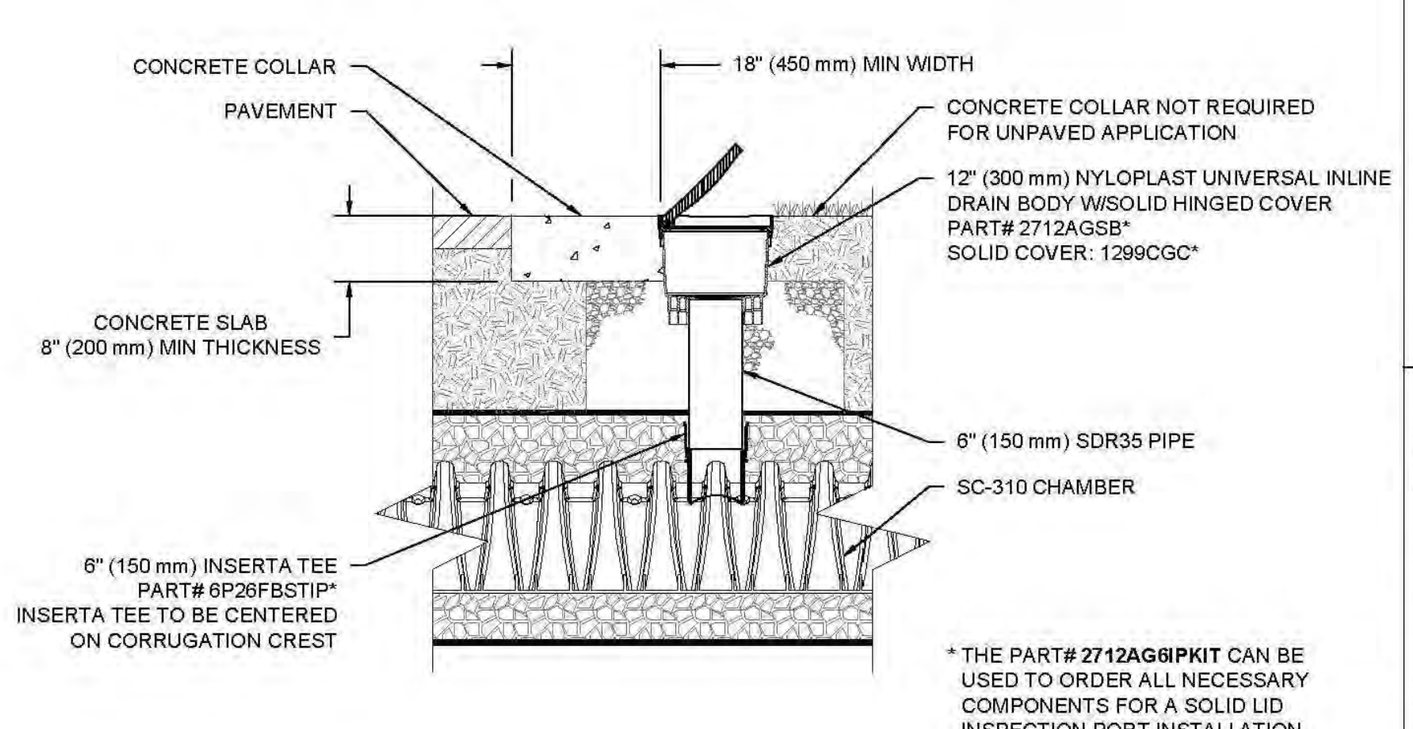

* THE PART# **2712AG6IPKIT** CAN BE USED TO ORDER ALL NECESSARY COMPONENTS FOR A SOLID LID INSPECTION PORT INSTALLATION

SC-310 6" (150 mm) INSPECTION PORT DETAIL
NTS

SPEED TRACK MARKET
MURFREESBORO, TN, USA
DATE: 07/08/2025 | DRAWN: DH
PROJECT #: S478799 | CHECKED: RWD

StormTech® Chamber System

4640 TRUEMAN BLVD
HILLIARD, OH 43026
1-800-733-7473

SHEET 4 OF 6

UNDERDRAIN DETAIL
NTS

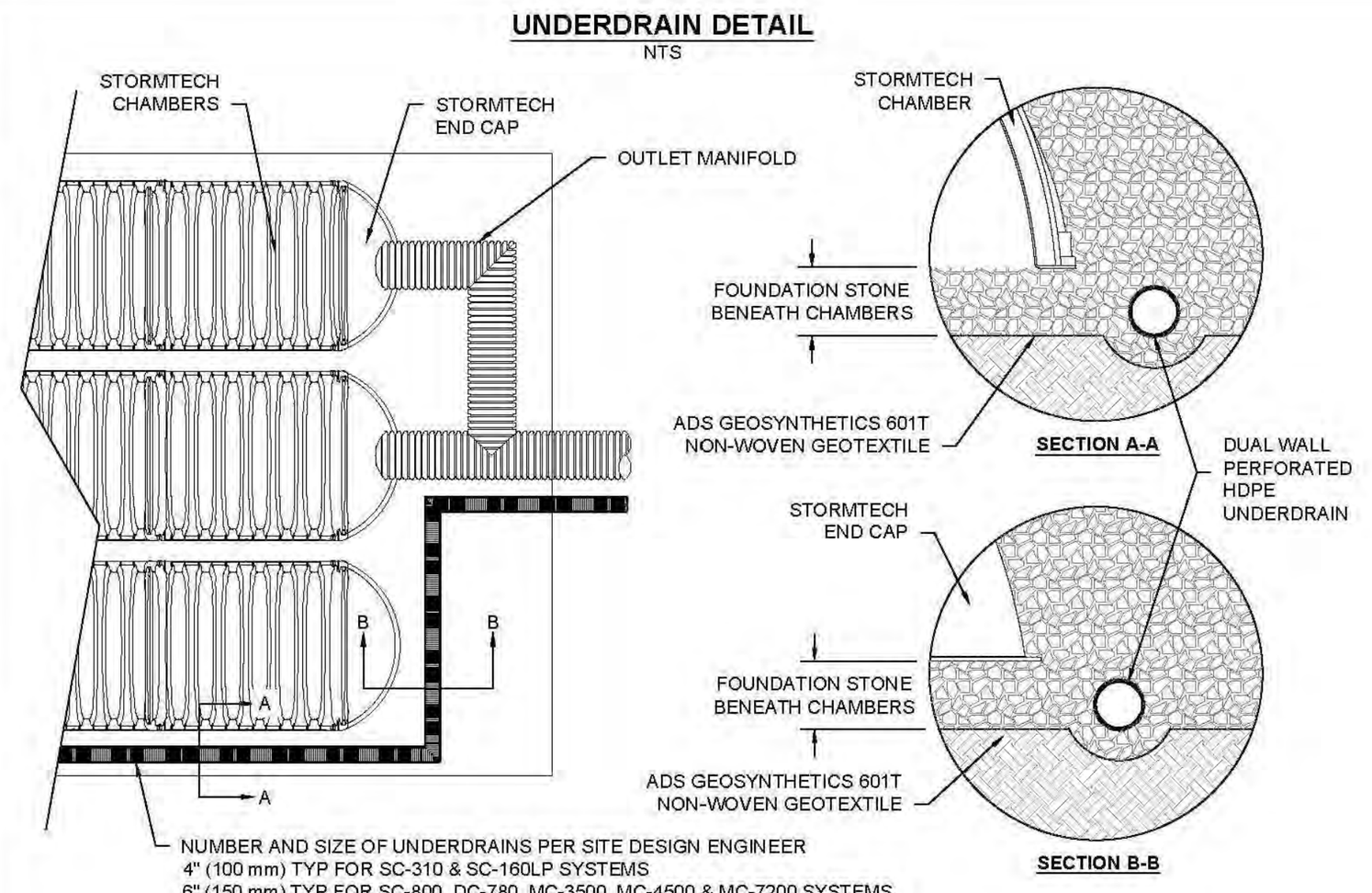

SC-310 TECHNICAL SPECIFICATION
NTS

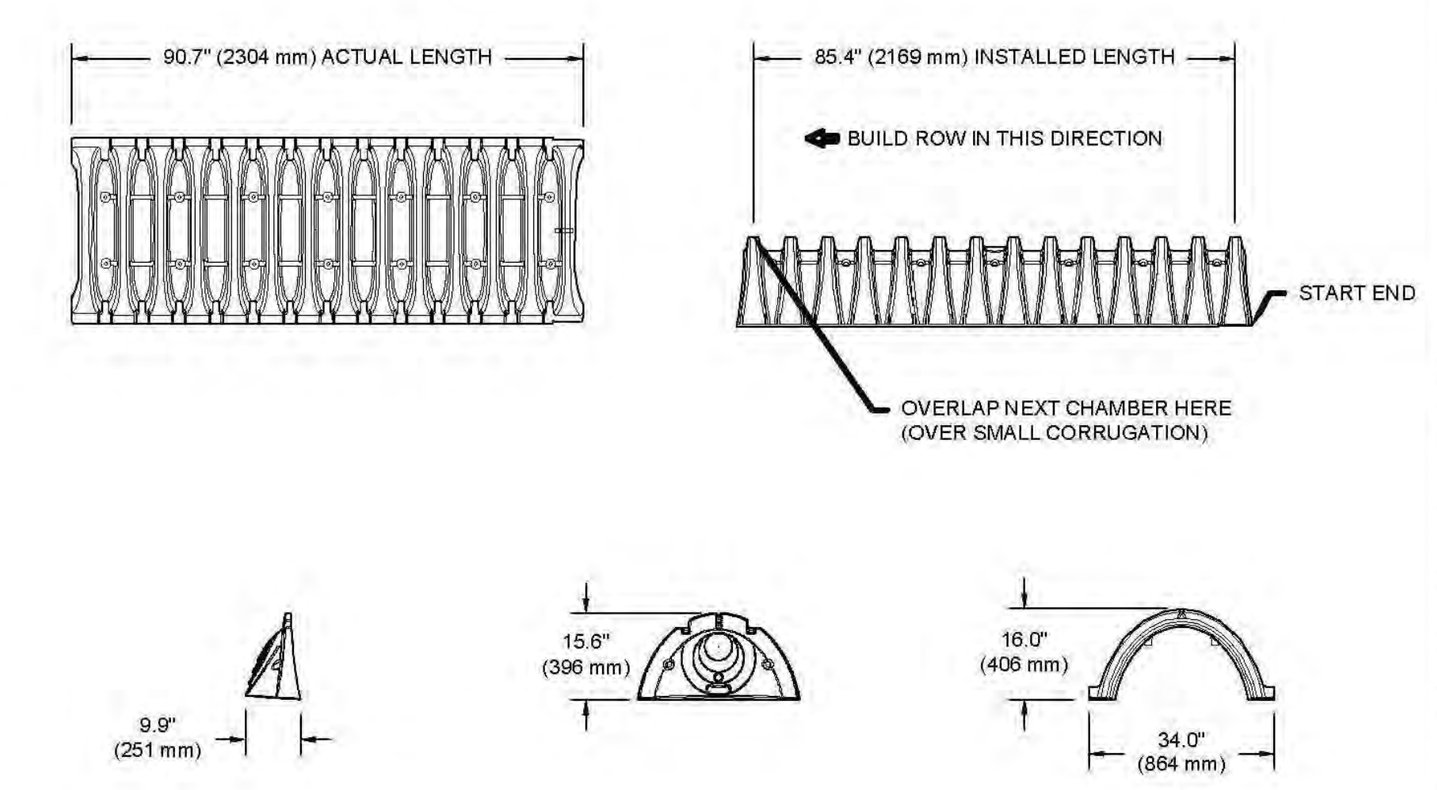

NOMINAL CHAMBER SPECIFICATIONS

SIZE (W X H X INSTALLED LENGTH)	34.0" X 16.0" X 85.4"	(864 mm X 406 mm X 2169 mm)
CHAMBER STORAGE	14.7 CUBIC FEET	(0.42 m³)
MINIMUM INSTALLED STORAGE*	29.3 CUBIC FEET	(0.83 m³)
WEIGHT	35.0 lbs.	(16.8 kg)

*ASSUMES 6" (152 mm) ABOVE, BELOW, AND 3" (75 mm) BETWEEN CHAMBERS

PART #	STUB	B	C
SC310EPE06TPC	6" (150 mm)	5.8" (147 mm)	---
SC310EPE06BPC		---	0.5" (13 mm)
SC310EPE08TPC	8" (200 mm)	3.5" (89 mm)	---
SC310EPE08BPC		---	0.6" (15 mm)
SC310EPE10TPC	10" (250 mm)	1.4" (36 mm)	---
SC310EPE10BPC		---	0.7" (18 mm)
SC310ECEZ*	12" (300 mm)	---	0.9" (23 mm)

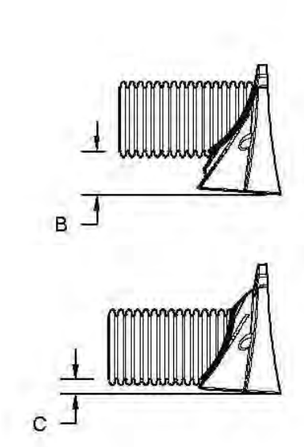

ALL STUBS, EXCEPT FOR THE SC310ECEZ ARE PLACED AT BOTTOM OF END CAP SUCH THAT THE OUTSIDE DIAMETER OF THE STUB IS FLUSH WITH THE BOTTOM OF THE END CAP. FOR ADDITIONAL INFORMATION CONTACT STORMTECH AT 1-888-892-2694.

* FOR THE SC310ECEZ THE 12" (300 mm) STUB LIES BELOW THE BOTTOM OF THE END CAP APPROXIMATELY 0.25" (6 mm). BACKFILL MATERIAL SHOULD BE REMOVED FROM BELOW THE N-12 STUB SO THAT THE FITTING SITS LEVEL.

NOTE: ALL DIMENSIONS ARE NOMINAL; PRE-CORED END CAPS END WITH "PC"

SPEED TRACK MARKET
MURFREESBORO, TN, USA
DATE: 07/08/2025 | DRAWN: DH
PROJECT #: S478799 | CHECKED: RWD

StormTech® Chamber System

4640 TRUEMAN BLVD
HILLIARD, OH 43026
1-800-733-7473

SHEET 5 OF 6

NYLOPLAST DRAIN BASIN
NTS

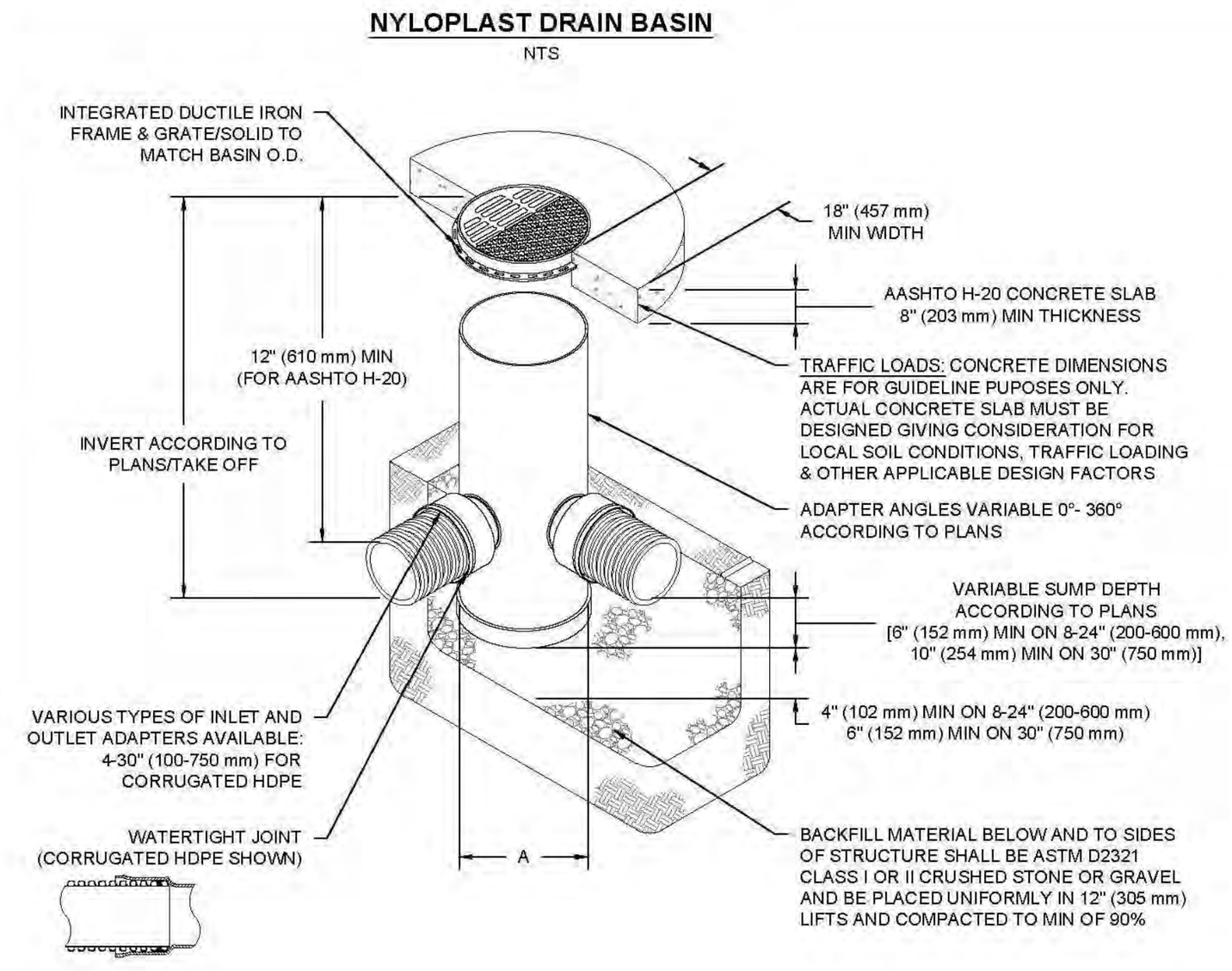

NOTES

1. 8-30" (200-750 mm) GRATES/SOLID COVERS SHALL BE DUCTILE IRON PER ASTM A536 GRADE 70-50-05
2. 12-30" (300-750 mm) FRAMES SHALL BE DUCTILE IRON PER ASTM A536 GRADE 70-50-05
3. DRAIN BASIN TO BE CUSTOM MANUFACTURED ACCORDING TO PLAN DETAILS
4. DRAINAGE CONNECTION STUB JOINT TIGHTNESS SHALL CONFORM TO ASTM D3212 FOR CORRUGATED HDPE (ADS & HANCOR DUAL WALL) & SDR 35 PVC
5. FOR COMPLETE DESIGN AND PRODUCT INFORMATION: **WWW.NYLOPLAST-US.COM**
6. TO ORDER CALL: **800-821-6710**

A	PART #	GRATE/SOLID COVER OPTIONS		
8" (200 mm)	2808AG	PEDESTRIAN LIGHT DUTY	STANDARD LIGHT DUTY	SOLID LIGHT DUTY
10" (250 mm)	2810AG	PEDESTRIAN LIGHT DUTY	STANDARD LIGHT DUTY	SOLID LIGHT DUTY
12" (300 mm)	2812AG	PEDESTRIAN AASHTO H-10	STANDARD AASHTO H-20	SOLID AASHTO H-20
15" (375 mm)	2815AG	PEDESTRIAN AASHTO H-10	STANDARD AASHTO H-20	SOLID AASHTO H-20
18" (450 mm)	2818AG	PEDESTRIAN AASHTO H-10	STANDARD AASHTO H-20	SOLID AASHTO H-20
24" (600 mm)	2824AG	PEDESTRIAN AASHTO H-10	STANDARD AASHTO H-20	SOLID AASHTO H-20
30" (750 mm)	2830AG	PEDESTRIAN AASHTO H-20	STANDARD AASHTO H-20	SOLID AASHTO H-20

SPEED TRACK MARKET
MURFREESBORO, TN, USA
DATE: 07/08/2025 | DRAWN: DH
PROJECT #: S478799 | CHECKED: RWD

Nyloplast®

4640 TRUEMAN BLVD
HILLIARD, OH 43026
1-800-733-7473

SHEET 6 OF 6

DRAWING REVISIONS

NO.	DATE	DESCRIPTION
0	06-10-25	ORIGINAL ISSUE
1	07-10-25	REVISED PER RCRPC COMMENTS
2	07-24-25	REVISED PER RCRPC COMMENTS

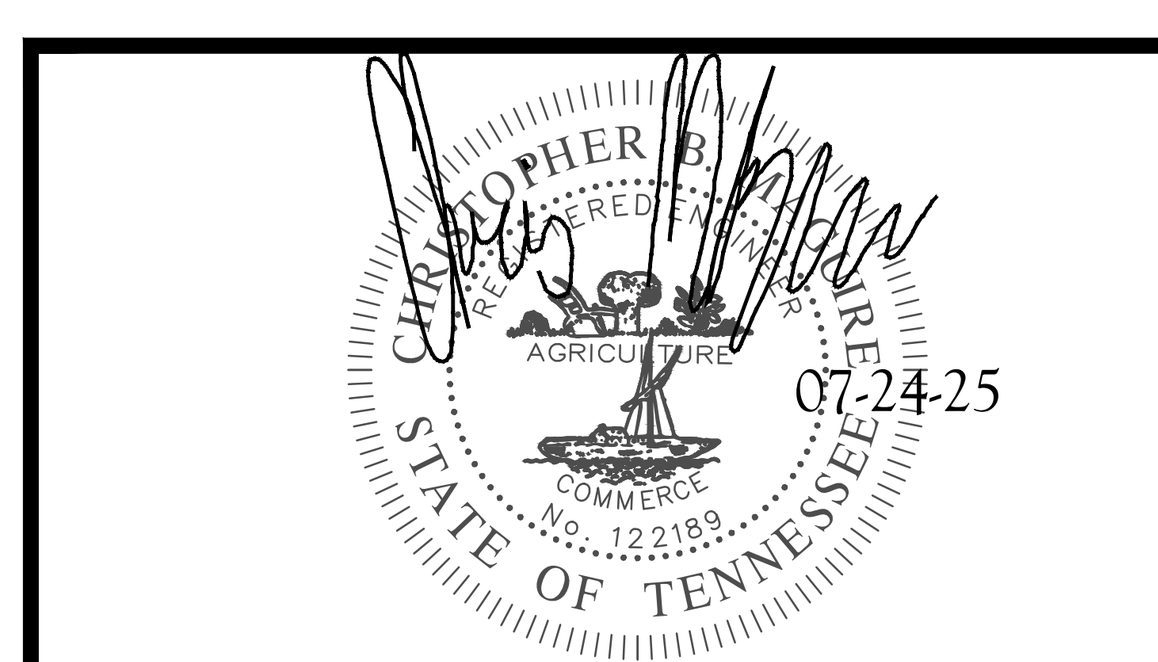

HUDDLESTON-STEELE ENGINEERING, INC.
2115 N.W. BROAD STREET, MURFREESBORO, TN 37129
SURVEYING : 893 - 4084, FAX: 893 - 0080

DETAILS
SPEED TRACK MARKET

LOT 4 MCCORMICK COMMERCIAL SUBDIVISON
4435 W JEFFERSON PIKE, MURFREESBORO, TN

5TH CIVIL DISTRICT OF RUTHERFORD COUNTY, TENNESSEE

DATE: JUNE, 2025	SCALE: 1"=30'	SHEET C4.1

S:\ACAD204\Civil 3D Projects\McCormick Subdivision\DWG\Site Plan May 2025.dwg, Details, 7/24/2025 7:33:48 AM, ACAD204

PLAN NOTES

1. In Tennessee, it is a requirement per "The Underground Utility Damage Prevention Act" that anyone who engages in excavation must notify all known underground utility owners, no less than three nor more than ten working days prior of their intent to excavate. A list of these utilities may be obtained from the County Register of Deeds. Those utilities that participate in the Tennessee One-Call system can be notified by calling toll free 1-800-351-1111.
2. Underground utilities shown were located using available above ground evidence, and also from information obtained from the respective utility companies. The existence or non-existence of the utilities shown and any other utilities which may be present on this site or adjacent sites should be confirmed with the utility owner prior to commencing any work.
3. Parcels may be subject to additional easements, and/or restrictions, by record or prescription, that a complete title search may reveal.
4. Public utility and drainage easements where shown hereon are intended to indicate an easement for construction, operation, and maintenance of public utilities and drainage ways; including, but not limited to, sanitary sewers, force mains, water lines, telephone signal conduits, electric conductors, drainage pipes, and natural gas lines. Easements may not have infrastructure constructed within them until some future time and there may be no notice or consultation with the individual lot Owners of this construction.
5. Per RCRPC, Will need signal plans approved by the county and TDOT prior to the preconstruction meeting.
6. Per RCRPC, the approval of this site plan does not constitute approval of any signage.
7. Per RCRPC, all above ground or underground tanks will require permitting through the Fire Marshal's Office.
8. Per RCRPC, all grease traps must have traffic rated lids & access ports.

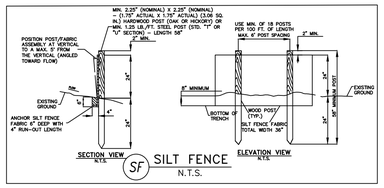

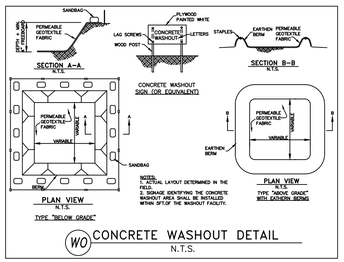

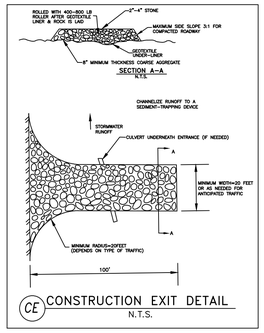

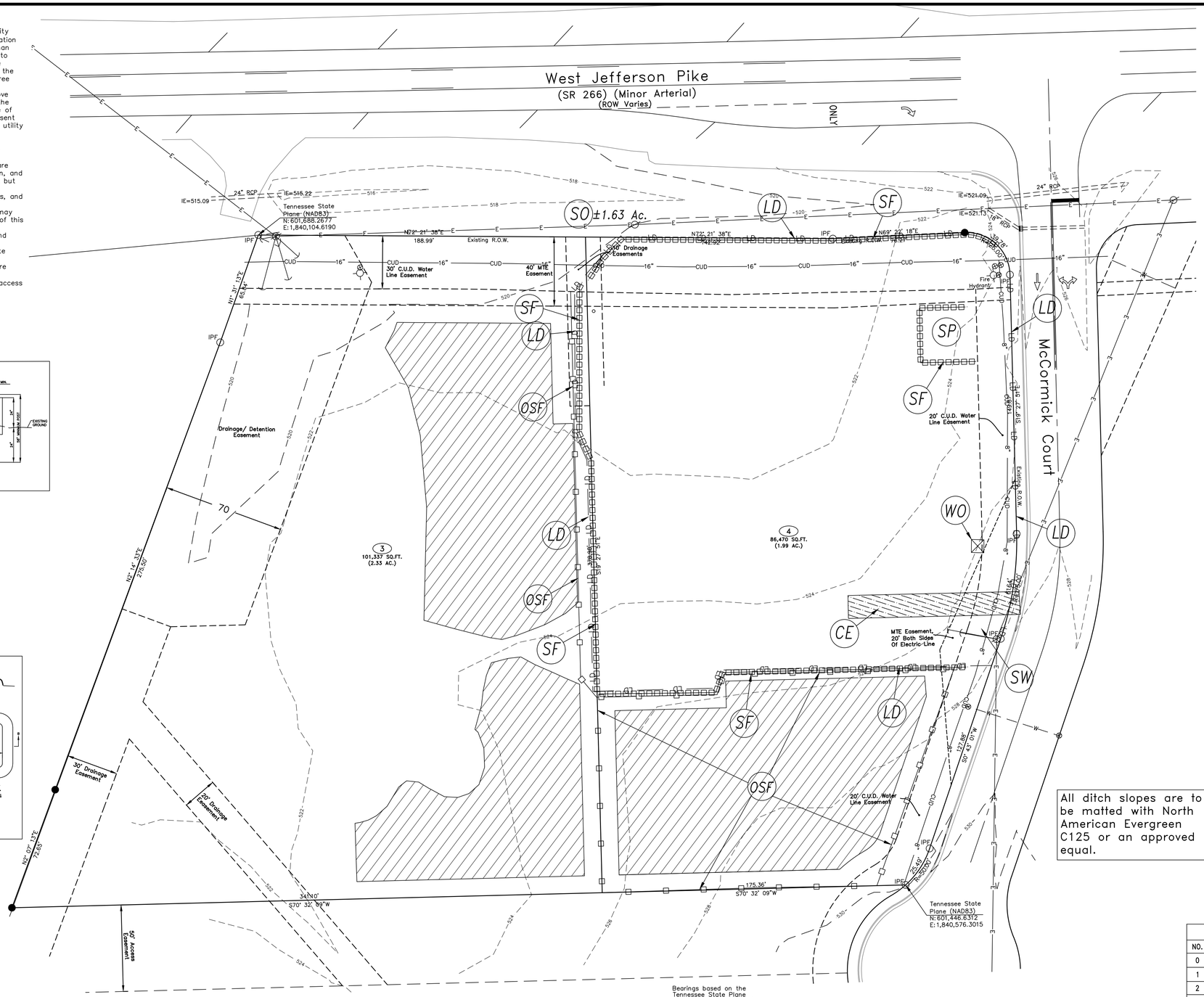

LEGEND

- Power Pole
- Existing Fire Hydrant
- Proposed Fire Hydrant
- Reducer
- Water Valve
- Concrete Thrust Block
- Existing Water Line
- Proposed Water Line
- Existing Sanitary Sewer Line
- Proposed Sanitary Sewer Line
- Existing Manhole
- Proposed Manhole
- Existing Contours
- Proposed Contours
- Gas Meter
- Existing Gas Line
- Proposed Gas Line
- Proposed Underground Electric Line
- Proposed Underground Data Line Conduit
- Proposed Underground Phone Line Conduit
- Power Pole Anchor
- 698.7+ Existing Spot Elevation
- 698.7+ Proposed Spot Elevation
- Existing Storm Line
- Proposed Storm Line
- CUD Water Meter
- Proposed Driveway Location

Limits of Disturbance = ±1.43 Ac.

EROSION CONTROL LEGEND

- SO SITE OUTFALL
- SF SILT FENCE
- CE CONSTRUCTION EXIT
- WO CONCRETE WASHOUT AREA
- IP INLET PROTECTION
- SW SWPPP BOARD
- LD LIMITS OF DISTURBANCE
- OSF ORANGE SILT FENCE
- SP STOCK PILE

All ditch slopes are to be matted with North American Evergreen C125 or an approved equal.

NOTE: ALL ABOVEGROUND OR UNDERGROUND TANKS WILL REQUIRE PERMITTING THROUGH THE FIRE MARSHAL'S OFFICE.

Bearings based on the Tennessee State Plane Coordinate System (NAD83)

N, E, S, W — STATE PLANE

30' 0 30'

LEGEND FOR MONUMENTS
- O IRON PIN SET. (1/2" rebar with HSENGR cap)
- IPF O IRON PIN FND.
- O RAILROAD SPIKE
- FENCE
- SURVEY POINT
- △ NAIL
- CONC. MARKER FND.
- UGC MARKER

Developer: Radhe Krishna Investment, LLC
Attn: Jaydev Patel
Address: 4801 Waterlook Way
Smyrna, TN 37167

Owner: RAM Properties
Address: P.O. Box 10989
Murfreesboro,TN 37129
Tax Map 26, Parcel 30.03
Record Book 1609, Page 1161

THIS TRACT IS NOT LOCATED IN AN AREA DESIGNATED AS "SPECIAL FLOOD HAZARD" ON THE NATIONAL FLOOD INSURANCE PROGRAM COMMUNITY MAP 470149, PANEL NO. 0131H, ZONE: X, DATED: JANUARY 05, 2007.

DRAWING REVISIONS

NO.	DATE	DESCRIPTION
0	06-10-25	ORIGINAL ISSUE
1	07-10-25	REVISED PER RCRPC COMMENTS
2	07-24-25	REVISED PER RCRPC COMMENTS

07-24-25

SHUDDLESTON-STEELE ENGINEERING, INC.
2115 N.W. BROAD STREET, MURFREESBORO, TN 37129
SURVEYING : 893 - 4084, FAX: 893 - 0080

EROSION PROTECTION & SEDIMENT CONTROL INITIAL MEASURES

SPEED TRACK MARKET

LOT 4 MCCORMICK COMMERCIAL SUBDIVISON
4435 W JEFFERSON PIKE, MURFREESBORO, TN
5TH CIVIL DISTRICT OF RUTHERFORD COUNTY, TENNESSEE

DATE: JUNE, 2025 | SCALE: 1"=30' | SHEET C5.0

S:\ACAD204\Civil 3D Projects\McCormick Subdivision\DWG\Site Plan May 2025.dwg, EPSC, 7/24/2025 7:33:29 AM, ACAD204

PLAN NOTES

1. In Tennessee, it is a requirement per "The Underground Utility Damage Prevention Act" that anyone who engages in excavation must notify all known underground utility owners, no less than three nor more than ten working days prior of their intent to excavate. A list of these utilities may be obtained from the County Register of Deeds. Those utilities that participate in the Tennessee One-Call system can be notified by calling toll free 1-800-351-1111.
2. Underground utilities shown were located using available above ground evidence, and also from information obtained from the respective utility companies. The existence or non-existence of the utilities shown and any other utilities which may be present on this site or adjacent sites should be confirmed with the utility owner prior to commencing any work.
3. Parcels may be subject to additional easements, and/or restrictions, by record or prescription, that a complete title search may reveal.
4. Public utility and drainage easements where shown hereon are intended to indicate an easement for construction, operation, and maintenance of public utilities and drainage ways; including, but not limited to, sanitary sewers, force mains, water lines, telephone signal conduits, electric conductors, drainage pipes, and natural gas lines. Easements may not have infrastructure constructed within them until some future time and there may be no notice or consultation with the individual lot Owners of this construction.
5. Per RCRPC, Will need signal plans approved by the county and TDOT prior to the preconstruction meeting.
6. Per RCRPC, the approval of this site plan does not constitute approval of any signage.
7. Per RCRPC, all above ground or underground tanks will require permitting through the Fire Marshal's Office.
8. Per RCRPC, all grease traps must have traffic rated lids & access ports.

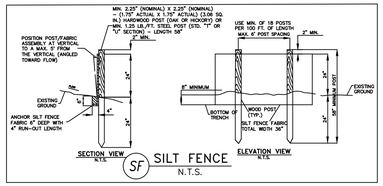

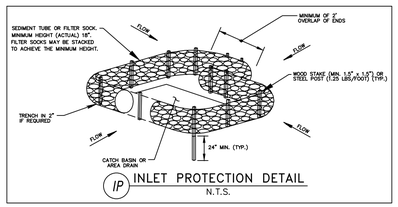

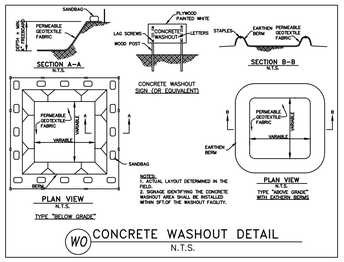

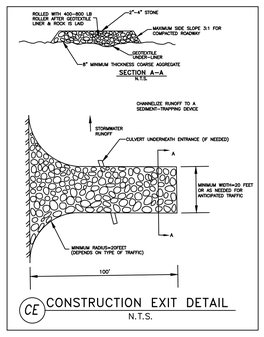

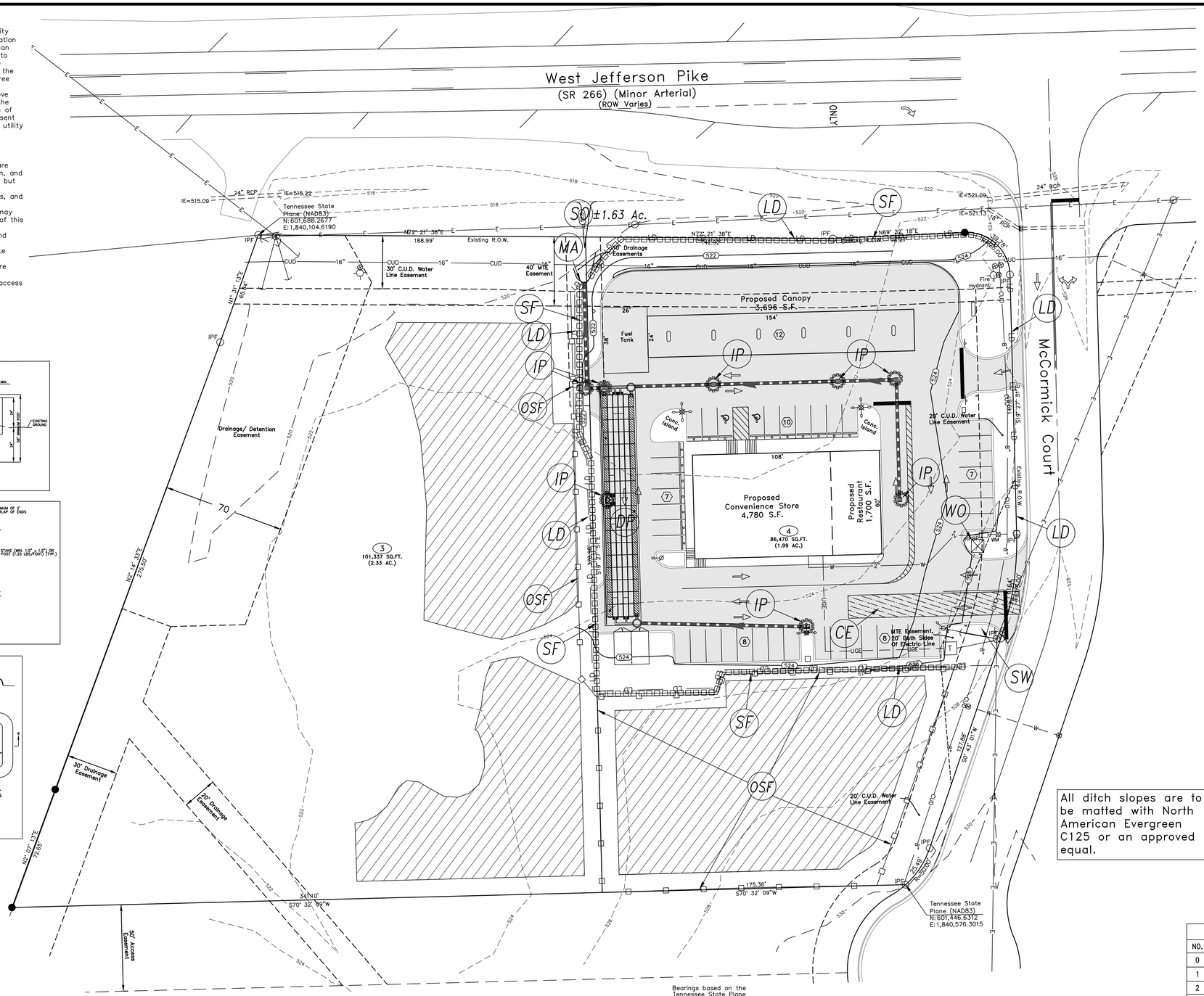

LEGEND

- Power Pole
- Existing Fire Hydrant
- Proposed Fire Hydrant
- Reducer
- Water Valve
- Concrete Thrust Block
- Existing Water Line
- Proposed Water Line
- Existing Sanitary Sewer Line
- Proposed Sanitary Sewer Line
- Existing Manhole
- Proposed Manhole
- Existing Contours
- Proposed Contours
- Gas Meter
- Existing Gas Line
- Proposed Gas Line
- Proposed Underground Electric Line
- Proposed Underground Data Line Conduit
- Proposed Underground Phone Line Conduit
- Power Pole Anchor
- Existing Spot Elevation
- Proposed Spot Elevation
- Existing Storm Line
- Proposed Storm Line
- CUD Water Meter
- Proposed Driveway Location

Limits of Disturbance = ±1.43 Ac.

EROSION CONTROL LEGEND

- (SO) SITE OUTFALL
- (SF) SILT FENCE
- (CE) CONSTRUCTION EXIT
- (WO) CONCRETE WASHOUT AREA
- (MA) TURF MATTING
- (IP) INLET PROTECTION
- (SW) SWPPP BOARD
- (DP) DETENTION POND
- (LD) LIMITS OF DISTURBANCE
- (OSF) ORANGE SILT FENCE

All ditch slopes are to be matted with North American Evergreen C125 or an approved equal.

NOTE: ALL ABOVEGROUND OR UNDERGROUND TANKS WILL REQUIRE PERMITTING THROUGH THE FIRE MARSHAL'S OFFICE.

Bearings based on the Tennessee State Plane Coordinate System (NADB3)

LEGEND FOR MONUMENTS
- IRON PIN SET (1/2" rebar with HSENGR cap)
- IPF IRON PIN FND.
- RAILROAD SPIKE
- FENCE
- SURVEY POINT
- NAIL
- CONC. MARKER FND.
- UGC MARKER

Developer: Radhe Krishna Investment, LLC
Attn: Jaydev Patel
Address: 4801 Waterlook Way
Smyrna, TN 37167

Owner: RAM Properties
Address: P.O. Box 10989
Murfreesboro,TN 37129
Tax Map 26, Parcel 30.03
Record Book 1609, Page 1161

THIS TRACT IS NOT LOCATED IN AN AREA DESIGNATED AS "SPECIAL FLOOD HAZARD" ON THE NATIONAL FLOOD INSURANCE PROGRAM COMMUNITY MAP 470149, PANEL NO. 0131H, ZONE: X, DATED: JANUARY 05, 2007.

DRAWING REVISIONS		
NO.	DATE	DESCRIPTION
0	06-10-25	ORIGINAL ISSUE
1	07-10-25	REVISED PER RCRPC COMMENTS
2	07-24-25	REVISED PER RCRPC COMMENTS

07-24-25

HUDDLESTON-STEELE ENGINEERING, INC.
2115 N.W. BROAD STREET, MURFREESBORO, TN 37129
SURVEYING : 893 - 4084, FAX: 893 - 0080

EROSION PROTECTION & SEDIMENT CONTROL INTERMEDIATE MEASURES

SPEED TRACK MARKET

LOT 4 MCCORMICK COMMERCIAL SUBDIVISON
4435 W JEFFERSON PIKE, MURFREESBORO, TN
5TH CIVIL DISTRICT OF RUTHERFORD COUNTY, TENNESSEE

DATE: JUNE, 2025 | SCALE: 1"=30' | SHEET C5.1

S:\ACAD204\Civil 3D Projects\McCormick Subdivision\DWG\Site Plan May 2025.dwg, EPSC, 7/24/2025 7:33:10 AM, ACAD204

PLAN NOTES

1. In Tennessee, it is a requirement per "The Underground Utility Damage Prevention Act" that anyone who engages in excavation must notify all known underground utility owners, no less than three nor more than ten working days prior of their intent to excavate. A list of these utilities may be obtained from the County Register of Deeds. Those utilities that participate in the Tennessee One-Call system can be notified by calling toll free 1-800-351-1111.
2. Underground utilities shown were located using available above ground evidence, and also from information obtained from the respective utility companies. The existence or non-existence of the utilities shown and any other utilities which may be present on this site or adjacent sites should be confirmed with the utility owner prior to commencing any work.
3. Parcels may be subject to additional easements, and/or restrictions, by record or prescription, that a complete title search may reveal.
4. Public utility and drainage easements where shown hereon are intended to indicate an easement for construction, operation, and maintenance of public utilities and drainage ways; including, but not limited to, sanitary sewers, force mains, water lines, telephone signal conduits, electric conductors, drainage pipes, and natural gas lines. Easements may not have infrastructure constructed within them until some future time and there may be no notice or consultation with the individual lot Owners of this construction.
5. Per RCRPC, Will need signal plans approved by the county and TDOT prior to the preconstruction meeting.
6. Per RCRPC, the approval of this site plan does not constitute approval of any signage.
7. Per RCRPC, all above ground or underground tanks will require permitting through the Fire Marshal's Office.
8. Per RCRPC, all grease traps must have traffic rated lids & access ports.

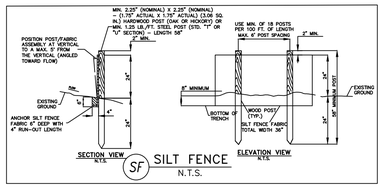

SF SILT FENCE
N.T.S.

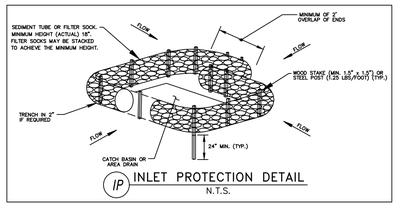

IP INLET PROTECTION DETAIL
N.T.S.

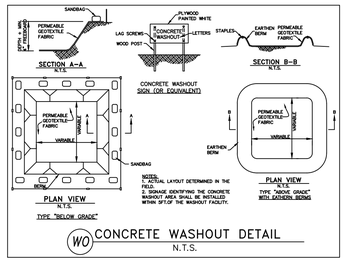

WO CONCRETE WASHOUT DETAIL
N.T.S.

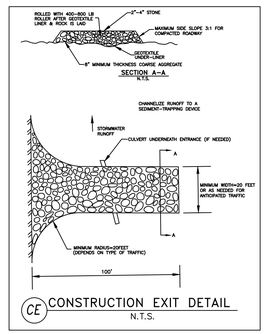

CE CONSTRUCTION EXIT DETAIL
N.T.S.

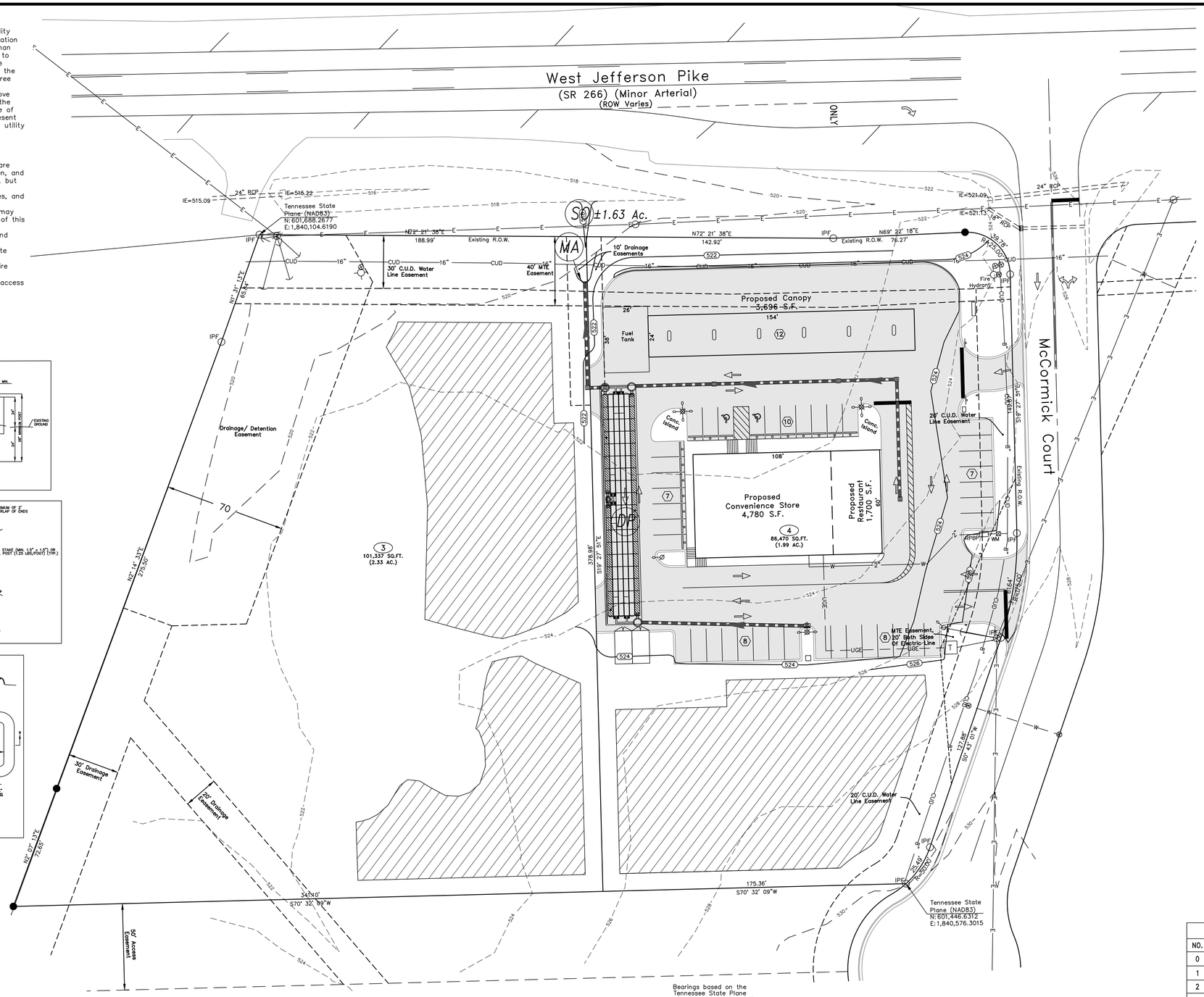

NOTE: ALL ABOVEGROUND OR UNDERGROUND TANKS WILL REQUIRE PERMITTING THROUGH THE FIRE MARSHAL'S OFFICE.

Bearings based on the Tennessee State Plane Coordinate System (NADB3)

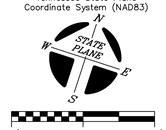

LEGEND FOR MONUMENTS
- IRON PIN SET (1/2" rebar with HSENGR cap)
- IPF IRON PIN FND.
- RAILROAD SPIKE
- FENCE
- SURVEY POINT
- MAIL
- CONC. MARKER FND.
- UGC MARKER

Developer: Radhe Krishna Investment, LLC
Attn: Jaydev Patel
Address: 4801 Waterlook Way
Smyrna, TN 37167

Owner: RAM Properties
Address: P.O. Box 10989
Murfreesboro,TN 37129
Tax Map 26, Parcel 30.03
Record Book 1609, Page 1161

THIS TRACT IS NOT LOCATED IN AN AREA DESIGNATED AS "SPECIAL FLOOD HAZARD" ON THE NATIONAL FLOOD INSURANCE PROGRAM COMMUNITY MAP 470149, PANEL NO. 0131H, ZONE: X, DATED: JANUARY 05, 2007.

LEGEND

- Power Pole
- Existing Fire Hydrant
- Proposed Fire Hydrant
- Reducer
- Water Valve
- Concrete Thrust Block
- Existing Water Line
- Proposed Water Line
- Existing Sanitary Sewer Line
- Proposed Sanitary Sewer Line
- Existing Manhole
- Proposed Manhole
- Existing Contours
- Proposed Contours
- Gas Meter
- Existing Gas Line
- Proposed Gas Line
- Proposed Underground Electric Line
- **Proposed Underground Data Line Conduit**
- Proposed Underground Phone Line Conduit
- Power Pole Anchor
- Existing Spot Elevation
- Proposed Spot Elevation
- Existing Storm Line
- Proposed Storm Line
- CUD Water Meter
- Proposed Driveway Location

Limits of Disturbance = ±1.43 Ac.

All ditch slopes are to be matted with North American Evergreen C125 or an approved equal.

EROSION CONTROL LEGEND

- (SO) SITE OUTFALL
- (MA) TURF MATTING
- (DP) DETENTION POND

DRAWING REVISIONS		
NO.	DATE	DESCRIPTION
0	06-10-25	ORIGINAL ISSUE
1	07-10-25	REVISED PER RCRPC COMMENTS
2	07-24-25	REVISED PER RCRPC COMMENTS

07-24-25

SHUDDLESTON-STEELE ENGINEERING, INC.
2115 N.W. BROAD STREET, MURFREESBORO, TN 37129
SURVEYING : 893 - 4084, FAX: 893 - 0080

EROSION PROTECTION & SEDIMENT CONTROL FINAL MEASURES
SPEED TRACK MARKET

LOT 4 MCCORMICK COMMERCIAL SUBDIVISON
4435 W JEFFERSON PIKE, MURFREESBORO, TN
5TH CIVIL DISTRICT OF RUTHERFORD COUNTY, TENNESSEE

DATE: JUNE, 2025 | SCALE: 1"=30' | SHEET C5.2

S:\ACAD20\4\Civil 3D Projects\McCormick Subdivision\DWG\Site Plan May 2025.dwg, EPSC, 7/24/2025 7:32:56 AM, ACAD204

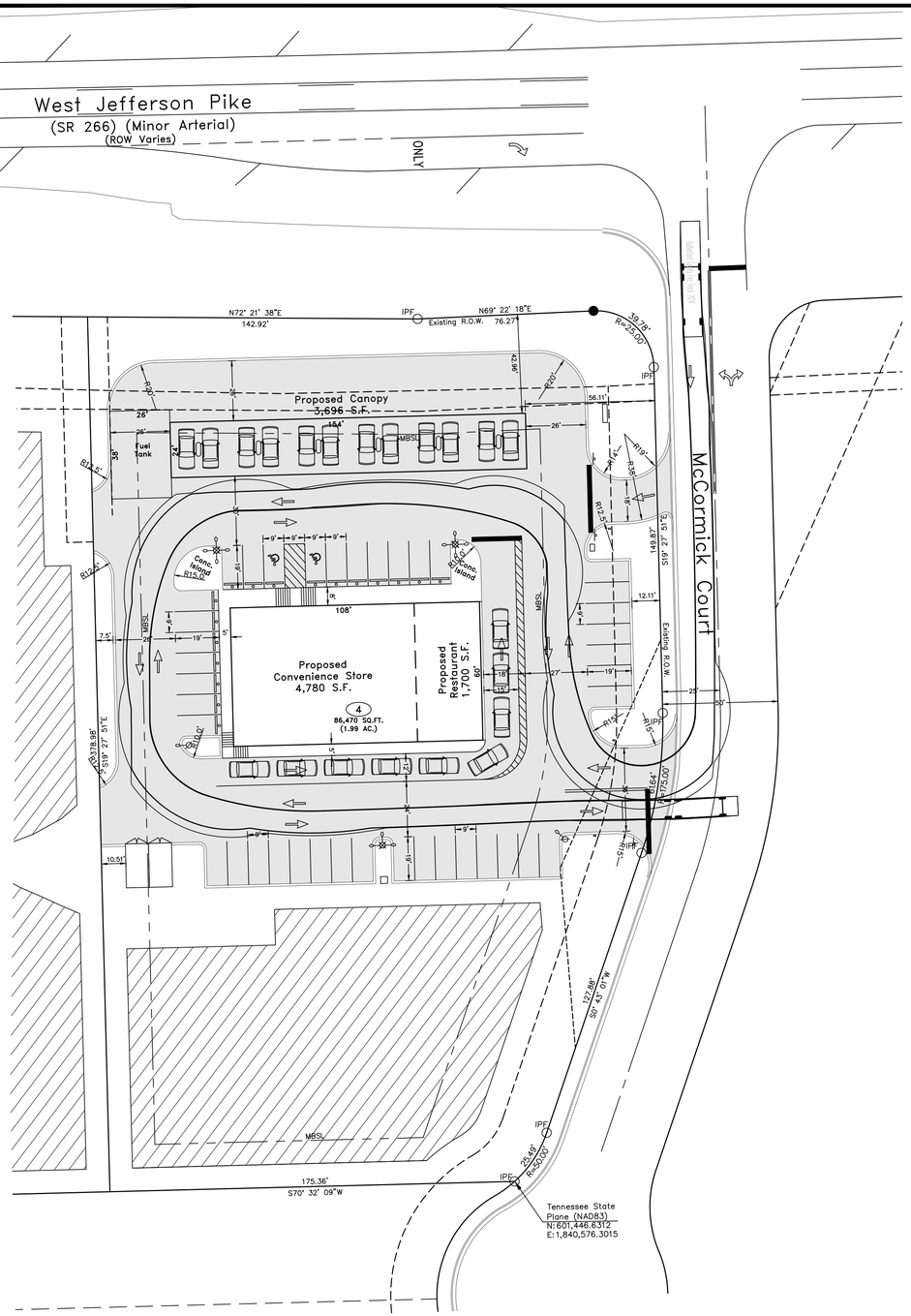

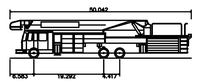

Rutherford County Fire Truck 2024	
Overall Length	50.042ft
Overall Width	8.333ft
Overall Body Height	10.432ft
Min Body Ground Clearance	0.862ft
Track Width	8.000ft
Lock-to-lock time	6.00s
Wall to Wall Turning Radius	42.000ft

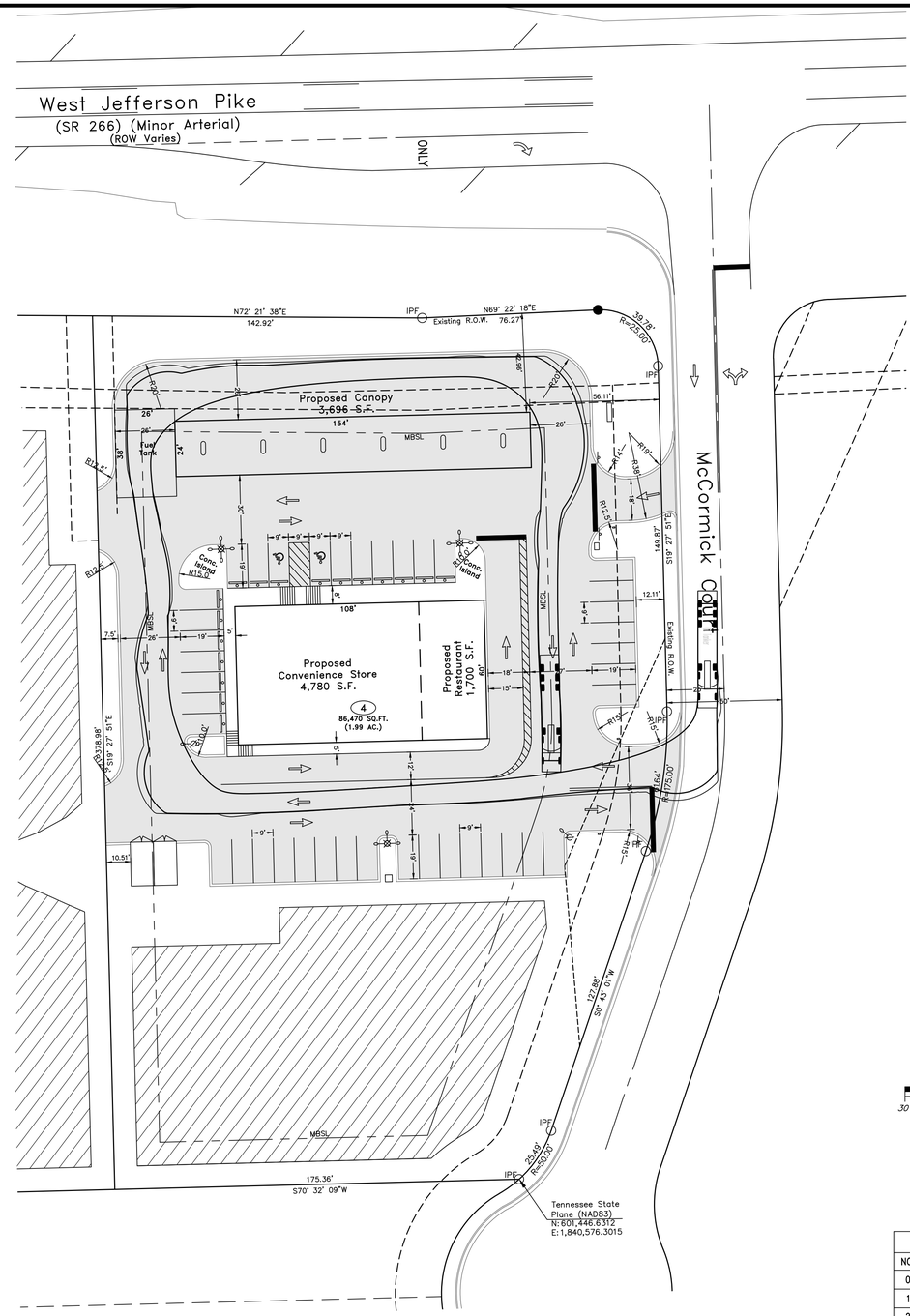

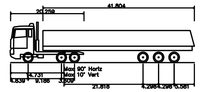

Oil Tanker	
Overall Length	50.725ft
Overall Width	8.202ft
Overall Body Height	11.141ft
Min Body Ground Clearance	1.049ft
Max Track Width	8.202ft
Lock-to-lock time	4.00s
Curb to Curb Turning Radius	21.325ft

LEGEND

- Power Pole
- Existing Fire Hydrant
- Proposed Fire Hydrant
- Reducer
- Water Valve
- Concrete Thrust Block
- Existing Water Line
- Proposed Water Line
- Existing Sanitary Sewer Line
- Proposed Sanitary Sewer Line
- Existing Manhole
- Proposed Manhole
- Existing Contours
- Proposed Contours
- Gas Meter
- Existing Gas Line
- Proposed Gas Line
- Proposed Underground Electric Line
- Proposed Underground Data Line Conduit
- Proposed Underground Phone Line Conduit
- Power Pole Anchor
- Existing Spot Elevation
- Proposed Spot Elevation
- Existing Storm Line
- Proposed Storm Line
- CUD Water Meter
- Proposed Driveway Location



Developer: Radhe Krishna Investment, LLC
Attn: Jaydev Patel
Address: 4801 Waterlook Way
Smyrna, TN 37167

Owner: RAM Properties
Address: P.O. Box 10989
Murfreesboro,TN 37129
Tax Map 26, Parcel 30.03
Record Book 1609, Page 1161

THIS TRACT IS NOT LOCATED IN AN AREA DESIGNATED AS "SPECIAL FLOOD HAZARD" ON THE NATIONAL FLOOD INSURANCE PROGRAM COMMUNITY MAP 470149, PANEL NO. 0131H, ZONE: X, DATED: JANUARY 05, 2007.

DRAWING REVISIONS		
NO.	DATE	DESCRIPTION
0	06-10-25	ORIGINAL ISSUE
1	07-10-25	REVISED PER RCRPC COMMENTS
2	07-24-25	REVISED PER RCRPC COMMENTS

TRANSMITTAL COPY FOR REVIEW PURPOSES ONLY

SHUDDLESTON-STEELE ENGINEERING, INC.
2115 N.W. BROAD STREET, MURFREESBORO, TN 37129
SURVEYING : 893 - 4084, FAX: 893 - 0080

AUTOTURN
SPEED TRACK MARKET

LOT 4 MCCORMICK COMMERCIAL SUBDIVISON
4435 W JEFFERSON PIKE, MURFREESBORO, TN
5TH CIVIL DISTRICT OF RUTHERFORD COUNTY, TENNESSEE

DATE: JUNE, 2025	SCALE: 1"=30'	SHEET C6.0

S:\ACAD204\Civil 3D Projects\McCormick Subdivision\DWG\Site Plan May 2025.dwg, Autoturn, 7/24/2025 7:32:39 AM, ACAD204

PLAN NOTES

1. In Tennessee, it is a requirement per "The Underground Utility Damage Prevention Act" that anyone who engages in excavation must notify all known underground utility owners, no less than three nor more than ten working days prior of their intent to excavate. A list of these utilities may be obtained from the County Register of Deeds. Those utilities that participate in the Tennessee One-Call system can be notified by calling toll free 1-800-351-1111.
2. Underground utilities shown were located using available above ground evidence, and also from information obtained from the respective utility companies. The existence or non-existence of the utilities shown and any other utilities which may be present on this site or adjacent sites should be confirmed with the utility owner prior to commencing any work.
3. Parcels may be subject to additional easements, and/or restrictions, by record or prescription, that a complete title search may reveal.
4. Public utility and drainage easements where shown hereon are intended to indicate an easement for construction, operation, and maintenance of public utilities and drainage ways; including, but not limited to, sanitary sewers, force mains, water lines, telephone signal conduits, electric conductors, drainage pipes, and natural gas lines. Easements may not have infrastructure constructed within them until some future time and there may be no notice or consultation with the individual lot Owners of this construction.
5. Per RCRPC, Will need signal plans approved by the county and TDOT prior to the preconstruction meeting.
6. Per RCRPC, the approval of this site plan does not constitute approval of any signage.
7. Per RCRPC, all above ground or underground tanks will require permitting through the Fire Marshal's Office.

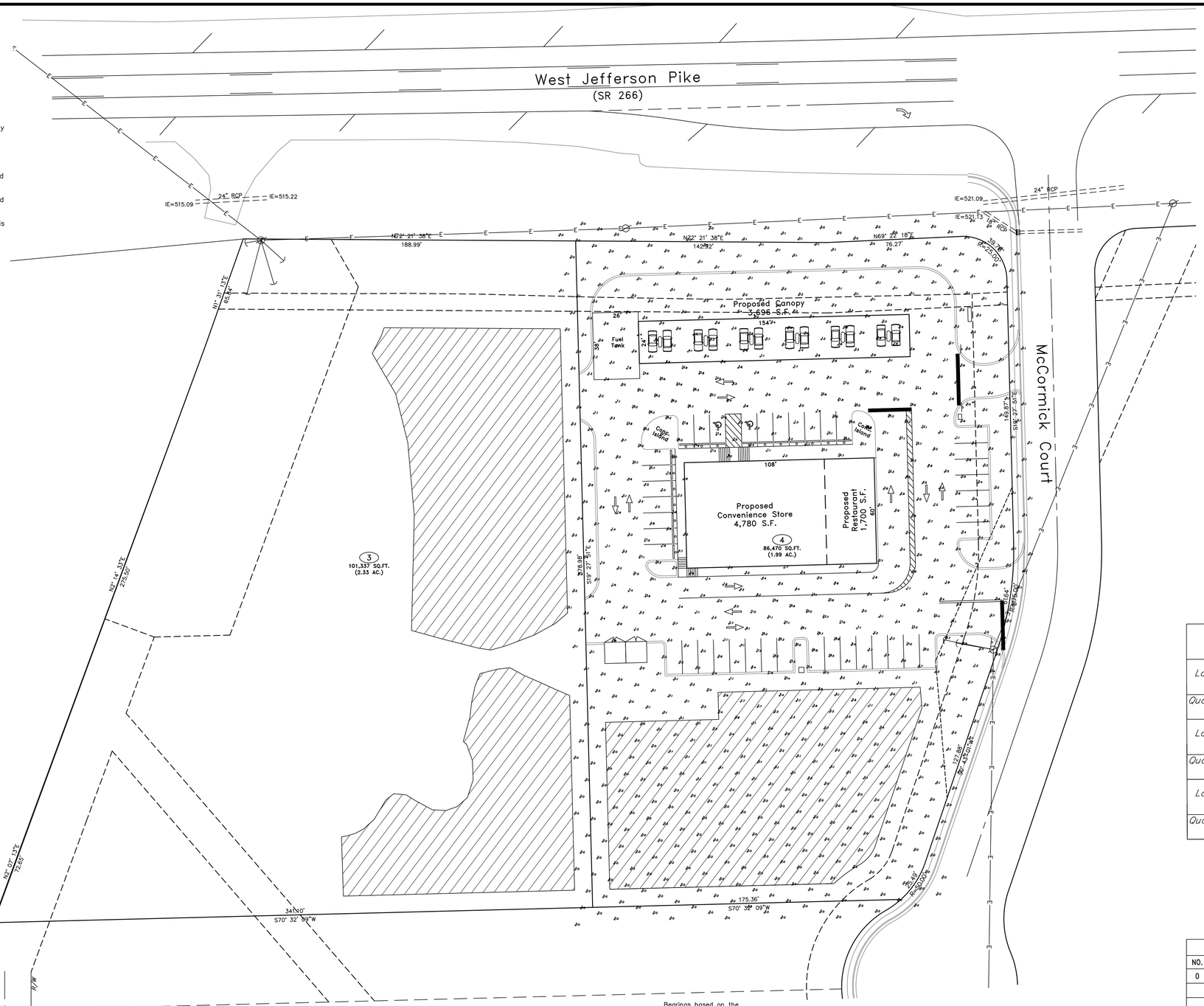

LEGEND

- Power Pole
- Existing Fire Hydrant
- Proposed Fire Hydrant
- Reducer
- Water Valve
- Concrete Thrust Block
- Existing Water Line
- Proposed Water Line
- Existing Sanitary Sewer Line
- Proposed Sanitary Sewer Line
- Existing Manhole
- Proposed Manhole
- Existing Contours
- Proposed Contours
- Gas Meter
- Existing Gas Line
- Proposed Gas Line
- Proposed Underground Electric Line
- **Proposed Underground Data Line Conduit**
- Proposed Underground Phone Line Conduit
- Power Pole Anchor
- 698.7+ Existing Spot Elevation
- 698.7+ Proposed Spot Elevation
- Existing Storm Line
- Proposed Storm Line
- CUD Water Meter
- Proposed Driveway Location

LUMINAIRE SCHEDULE

Label: A	Mirada Medium MRM-LED-24L-SIL-3-30-70CRI Mounted 16' with Triple Heads	
Quantity: 1	288W	LED, 38,283 Lumen, 4,000K
Label: B	Mirada Medium MRM-LED-36L-SIL-3-30-70CRI Mounted 16' With Quadruple Heads	
Quantity: 2	288W	LED, 38,283 Lumen, 4,000K
Label: C	Mirada Medium MRM-LED-36L-SIL-FTA-30-70CRI Mounted 16' With Single Head	
Quantity: 1	288W	LED, 38,283 Lumen, 4,000K

ZONED: LI (Light Industrial)
FRONT SETBACK: 50'
SIDE SETBACK: 20'
REAR SETBACK: 20'

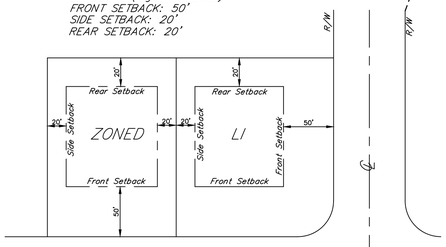

TYPICAL BUILDING SETBACK DETAIL
N.T.S.

Bearings based on the Tennessee State Plane Coordinate System (NAD83)

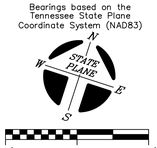

LEGEND FOR MONUMENTS
- IRON PIN SET (1/2" rebar with HSENIGR cap)
- IPF IRON PIN FND.
- RAILROAD SPIKE
- FENCE
- SURVEY POINT
- NAIL
- CONC. MARKER FND.
- UGC MARKER

Developer: Radhe Krishna Investment, LLC
Attn: Jaydev Patel
Address: 4801 Waterlook Way
Smyrna, TN 37167

Owner: RAM Properties
Address: P.O. Box 10989
Murfreesboro,TN 37129
Tax Map 26, Parcel 30.03
Record Book 1609, Page 1161

THIS TRACT IS NOT LOCATED IN AN AREA DESIGNATED AS "SPECIAL FLOOD HAZARD" ON THE NATIONAL FLOOD INSURANCE PROGRAM COMMUNITY MAP 470149, PANEL NO. 0131H, ZONE: X, DATED: JANUARY 05, 2007.

DRAWING REVISIONS		
NO.	DATE	DESCRIPTION
0	06-10-25	ORIGINAL ISSUE

CHRISTOPHER D. HUDDLESTON
REGISTERED AGRICULTURAL ENGINEER
STATE OF TENNESSEE
06-10-25

HUDDLESTON-STEELE ENGINEERING, INC.
2115 N.W. BROAD STREET, MURFREESBORO, TN 37129
SURVEYING : 893 - 4084, FAX: 893 - 0080

PHOTOMETRIC PLAN
SPEED TRACK MARKET

LOT 4 MCCORMICK COMMERCIAL SUBDIVISON
4435 W JEFFERSON PIKE, MURFREESBORO, TN
5TH CIVIL DISTRICT OF RUTHERFORD COUNTY, TENNESSEE

DATE: JUNE, 2025 | SCALE: 1"=30' | SHEET C7.0

C:\Civil 3D Projects\McCormick Subdivision\DWG\Site Plan May 2025-Photometric.dwg, Site Plan, 6/9/2025 3:16:16 PM, ACAD204

JEFFERSON PIKE

MCCORMICK CT

TWRA Access Road

I-840

C-2
5.21 Acres

I-1
64.79 Acres

BUILDING 1
± 249,563 SF
± 245 CAR PARKS
± 76 TRUCK PARKS

BUILDING 2
± 304,776 SF
± 205 CAR PARKS
± 88 TRUCK PARKS

BUILDING 3
± 113,960 SF
± 105 CAR PARKS

BUILDING 4
± 145,476 SF
± 130 CAR PARKS
± 41 TRUCK PARKS

N
STATE PLANE
W E
S

150' 0 150'

S:\ACAD204\Civil 3D Projects\Cornerstone-East of 840\Southeastern Properties\DWG\Southeast of 840 Concept June 2026.dwg, Layout1, 6/17/2026 11:29:29 AM, ACAD204

HUDDLESTON-STEELE ENGINEERING, INC.
2115 N.W. BROAD STREET, MURFREESBORO, TN 37129
SURVEYING : 893 - 4084, FAX: 893 - 0080

CORNERSTONE AT SMRYNA

SOUTHEAST SIDE OF 840 ON JEFFERSON PIKE TN

CONCEPTUAL LAYOUT PLAN

DATE: JUNE, 2026 | SCALE: 1"=150' | SHEET 1 OF 1



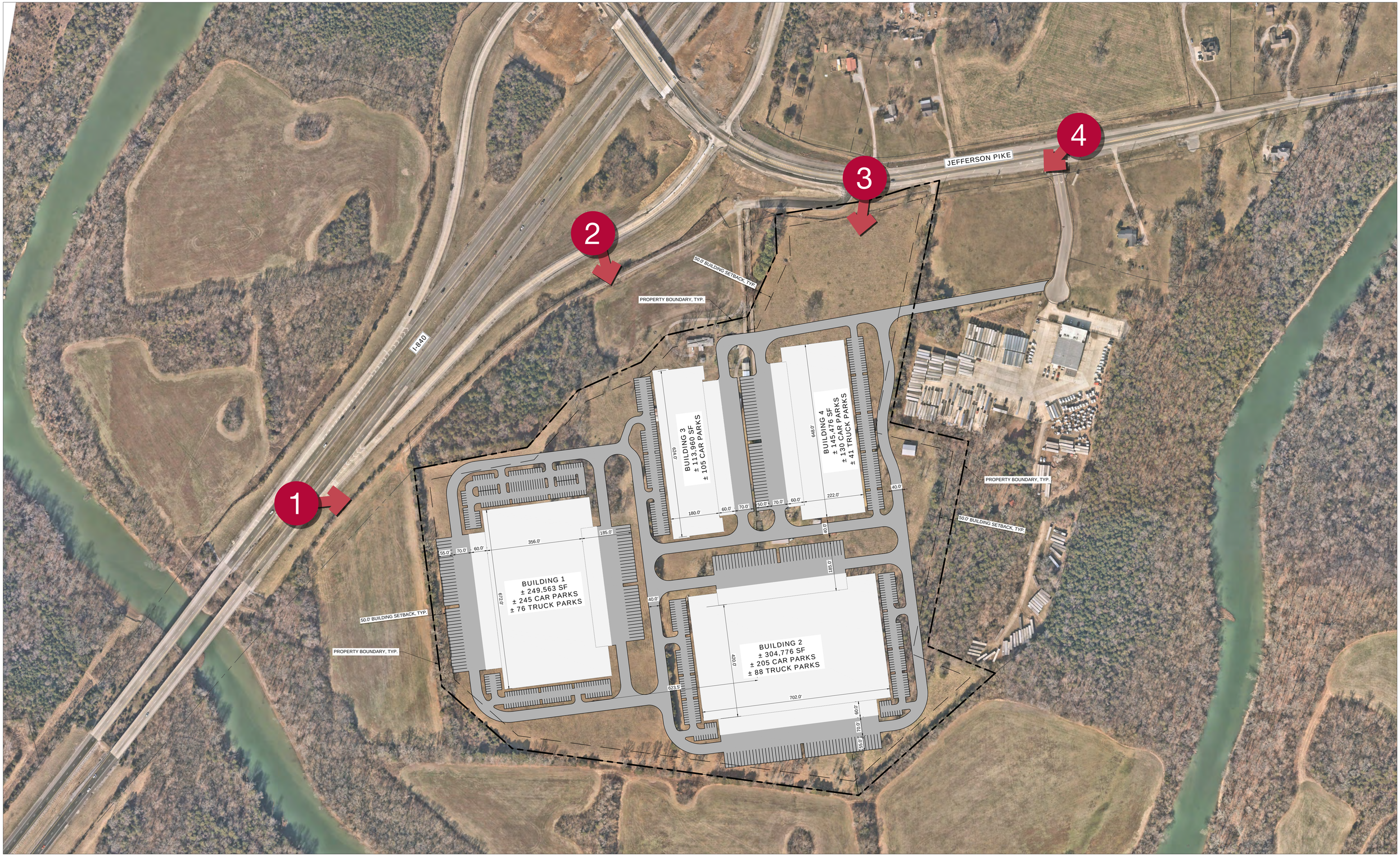

JEFFERSON PIKE AND I-840 - VIEW LOCATIONS

june 2026

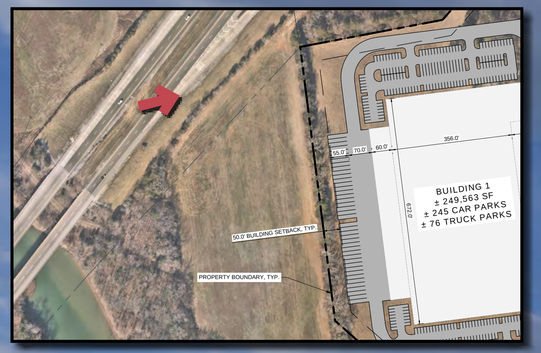

JEFFERSON PIKE AND I-840 - VIEW LOCATION 1

JUNE 2026

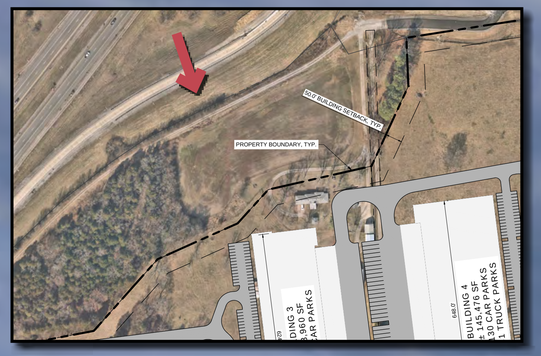

JEFFERSON PIKE AND I-840 - VIEW LOCATION 2

JUNE 2026



JEFFERSON PIKE AND I-840 - VIEW LOCATION 3

JUNE 2026



JEFFERSON PIKE AND I-840 - VIEW LOCATION 4

JUNE 2026



HUDDLESTON-STEELE ENGINEERING, INC.
2115 N.W. BROAD STREET, MURFREESBORO, TN 37129
SURVEYING : 893 - 4084, FAX: 893 - 0080

CORNERSTONE AT SMRYNA

SOUTHEAST SIDE OF 840 ON JEFFERSON PIKE TN

5TH CIVIL DISTRICT OF RUTHERFORD COUNTY, TENNESSEE

ROAD IMPROVEMENT EXHIBIT

DATE: JUNE, 2026 | SCALE: 1"=100' | SHEET 1 OF 1

S:\ACAD204\Civil 3D Projects\Cornerstone-East of 840\Southeastern Properties\DWG\Turn Lane Sketch.dwg, Layout1, 7/2/2026 1:53:56 PM, ACAD204

Hollingshead Land, LLC – Annexation and I-1 and C-2 Zoning Request
Tax Map 26, Parcels 31.00 and 32.00, owned and requested by Hollingshead Land, LLC.

Bordered on the west and south by the U.S. Army Corps of Engineers; on the east by Parcel 30.02, owned by RAM Properties, and Parcel 30.03 owned by Radhe Krishna Investment, LLC; and on the north by the existing right-of-way of S.R. 266/W. Jefferson Pike. Area annexed contains approximately 70.08 acres.

The annexation includes the annexation of the existing rights-of-way of the following public roads:

SR 266/W. Jefferson Pike: approximately 2,998 linear feet from the existing Town limits to the intersection with McCormick Court;

McCormick Court: approximately 475 linear feet from the intersection with SR 266/W. Jefferson Pike southward to its' endpoint.

Town of Smyrna
Town Council Meeting
Agenda Summary

Agenda Item Number 6.f.
Department: Administration
Date: July 14, 2026

Subject:
Consideration of a Resolution in Memorandum of Ordinance #26-34 relative to the annexation and C-2 and I-1 zoning of properties on Tax Map 26, Parcels 31.00 and 32.00 requested by Hollingshead Land, LLC.

Fiscal Impact:

Contract Type:

Contract Term (if applicable):

Background:
A Resolution is required by statute to accompany any annexations to Town limits.

Summary:
This is a housekeeping item.

Recommended Council Action:
Staff recommends approval of the Resolution if the annexation is passed on second reading.

Attachments:
1. Resolution #26-12- in Memo (Hollinshead)

TOWN OF SMYRNA, TENNESSEE
RESOLUTION 26-12

A RESOLUTION in memorandum of Ordinance #26-34 relative to the annexation and C-2 and I-1 zoning of properties on Tax Map 26, Parcels 31.00 and 32.00 requested by Hollingshead Land, LLC containing 70.08 acres. The properties are located at 4657 and 4665 W. Jefferson Pike. The request would include the annexation of the existing right-of-way of W. Jefferson Pike/S.R. 266 from the existing Town limits eastward approximately 2,998 linear feet, as well as the existing right-of-way of McCormick Court from W. Jefferson Pike/S.R. 266 southward approximately 475 linear feet.

WHEREAS, T.C.A. §6-51-104 requires a resolution for the annexation proposed by a property owner; and

WHEREAS, this Resolution shall mirror the intent and effect of Ordinance #26-34 relative to the annexation and C-2 and I-1 zoning of properties on Tax Map 26, Parcels 31.00 and 32.00 requested by Hollingshead Land, LLC containing 70.08 acres. The properties are located at 4657 and 4665 W. Jefferson Pike. The request would include the annexation of the existing right-of-way of W. Jefferson Pike/S.R. 266 from the existing Town limits eastward approximately 2,998 linear feet, as well as the existing right-of-way of McCormick Court from W. Jefferson Pike/S.R. 266 southward approximately 475 linear feet.

WHEREAS, Article II, Section 2.01 (35) authorizes the Town Council to exercise and have all other powers, functions, rights, privileges and immunities granted by general law or necessary or desirable to promote or protect the safety, health, peace, security, good order, comfort, convenience, morals, and general welfare of the town and its inhabitants, and all implied powers necessary to carry into execution all powers granted in this charter as fully and completely as if such powers were fully enumerated herein.

NOW, THEREFORE, BE IT RESOLVED by the Town Council of the Town of Smyrna, as follows:

Section 1. The Town Council hereby resolves to pass Ordinance #26-34 relative to the annexation and C-2 and I-1 zoning of properties on Tax Map 26, Parcels 31.00 and 32.00 requested by Hollingshead Land, LLC containing 70.08 acres. The properties are located at 4657 and 4665 W. Jefferson Pike. The request would include the annexation of the existing right-of-way of W. Jefferson Pike/S.R. 266 from the existing Town limits eastward approximately 2,998 linear feet, as well as the existing right-of-way of McCormick Court from W. Jefferson Pike/S.R. 266 southward approximately 475 linear feet.

Section 2. This resolution shall take effect immediately upon its adoption, the public health and welfare of the Town of Smyrna requiring it.

ADOPTED by the Town Council the _____ day of _____, 2026.

TOWN OF SMYRNA, TENNESSEE

_____

MARY ESTHER REED, Mayor

ATTEST: _____

AMBER HOBBS, Town Clerk

Town of Smyrna
Town Council Meeting
Agenda Summary

Agenda Item Number 7.a.1.
Department: Planning
Date: July 14, 2026

Subject:
Consideration of an Ordinance relative to the rezoning of property located on Tax Map 49, Parcel 2.01 owned by Woods Properties containing 2 acres from R-1 to C-2. The property is located at 10510 Old Nashville Highway.

Fiscal Impact:

Contract Type:

Contract Term (if applicable):

Background:
The property that is the subject of this request is located at 10510 Old Nashville Highway, approximately 500 feet northwest of the intersection with Pioneer Drive/Stewart Vally Drive. The Land Use Plan would support Medium Density Residential development in this immediate area, with nearby areas being located within the Old Nashville Corridor character area which would support a mix of neighborhood scale retail uses and personal services that provide markets for local customers. Townhomes, attached residential development, and other multifamily uses are also appropriate. The surrounding zoning is R-1, C-2, and PRD (Villas at Stewartsboro).

Summary:
There is an existing house and detached accessory structure on this property. A sewer line is stubbed into the property from the northwest in two locations. Water is provided by Consolidated Utility District. If this rezoning is approved, a Type C buffer would be required where this property borders residentially zoned properties when it is developed.

The Planning Commission reviewed this request and recommended approval 7 for, 0 against.

Recommended Council Action:
Staff recommends approval.

Attachments:

1. WoodsRezoningApp
2. 10510 ONH Map With Parcels
3. 10510 ONH Map With Zoning
4. Woods Properties July 2026 Rezoning Description

Town of Smyrna

Rezoning Request Application

APPLICANT INFORMATION:		
Name/Company: Woods Properties / Mike Woods		
Street Address: 1119 Courier Place		
City: Smyrna	State: TN	ZIP: 37167
Email: E2Store@BellSouth.net	Phone: 615-355-1274	

CONTRACTOR/DEVELOPER INFORMATION: CHECK BOX IF SAME AS APPLICANT		
Name/Company:		
Street Address:		
City:	State:	ZIP:
Email:	Phone:	

PROPERTY INFORMATION		
Street Address/Intersecting Streets: 10510 Old Nashville Hwy		
Tax Map: 049-007.01-000	Group:	Parcel:
Requested Lot Area (Square feet/Acres): two Acres		
Existing Zoning: R-1	**Requested Zoning:** C-2	
*Current Property Owner (See Note Below):		

APPLICANT AUTHORIZATION	
Applicant Signature: J Michael Woods	Date: 6/3/26

OFFICE USE ONLY		
Staff Initials:	Review Fee:	Date:

- **<u>*If the applicant is not the current property owner, authorization must be provided by the current property owner for the request of rezoning as mandated by State law.*</u>**
- Applications are to be submitted no later than 12:00 PM noon on the initial deadline date unless otherwise noted.
- All meetings are held at Smyrna Town Hall - 315 South Lowry Street - at 5:00 PM in the Town Council Chambers.
- All supporting documents must be submitted at the time of application.

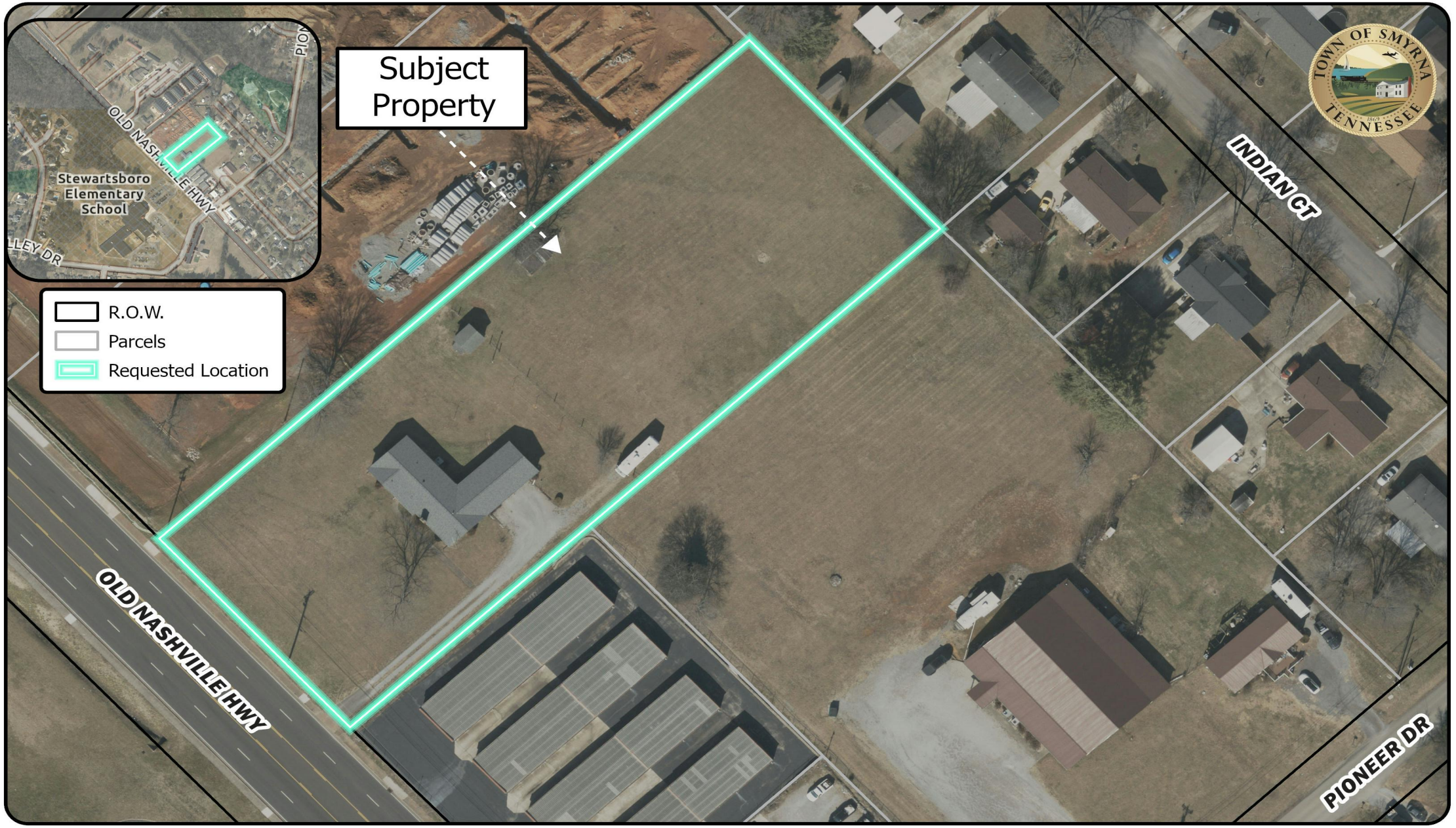

R-1 to C-2 Rezoning Request - 10510 Old Nashville Highway

Tax Map: 49 | Parcel: 2.01 | Acres: +/- 2.01

Owner: Woods Properties

N

0 50 100 Feet

Coordinate System: NAD 1983 StatePlane Tennessee FIPS 4100 Feet

Rutherford County, TN, Esri, TomTom, Garmin, SafeGraph, FAO, METI/NASA, USGS, EPA, NPS, USFWS, Esri



R-1 to C-2 Rezoning Request - 10510 Old Nashville Highway

Tax Map: 49 | Parcel: 2.01 | Acres: +/- 2.01

N

0 50 100 Feet

Owner: Woods Properties

Coordinate System: NAD 1983 StatePlane Tennessee FIPS 4100 Feet

Rutherford County, TN, Esri, TomTom, Garmin, SafeGraph, FAO, METI/NASA, USGS, EPA, NPS, USFWS, Esri

Woods Properties – Rezoning Request from R-1 to C-2

Tax Map 49, Parcel 2.01, owned and requested by Woods Properties.

Bordered on the south by Tax Map 49B, Group C, Parcel 14.00, owned by Woods Properties, and Parcel 9.00, owned by Church of God Pioneer Worship Center; on the east by Tax Map 49B, Group E, Parcel 12.00, owned by Trenton Thomas Short, and Parcel 11.00, owned by John Stuart; on the north by the Villas of Stewartsboro development; and on the west by the right-of-way of Old Nashville Highway.

Area requested to be rezoned from R-1 to C-2 contains approximately 2 acres.

Town of Smyrna
Town Council Meeting
Agenda Summary

Agenda Item Number 7.a.2.
Department: Planning
Date: July 14, 2026

Subject:
Consideration of an Ordinance relative to the rezoning of properties located on Tax Map 28M, Group G, Parcel 26.01, owned by Mitesh Patel; Parcel 28.00, owned by Shams Amraei and Rezvan Moosavi; Parcel 29.00, owned by Khairy Abdelmasih, Ebram Shalaby, Alaa Mankarious, & Eyd Toss; Parcel 30.00, owned by Paw Paw Enterprises, LLC; Parcels 31.00 and 33.00, owned by J & M Equity, LLC, from C-4 to C-2. In addition, Parcel 27.01, owned by Navarro Properties, LLC, has been requested to be rezoned from R-2 to C-2. The seven properties together total approximately 3.99 acres and are located on Old Nashville Highway northwest of the intersection with Enon Springs Road, West.

Fiscal Impact:

Contract Type:

Contract Term (if applicable):

Background:
The properties that are the subject of this request are located on Old Nashville Highway beginning at approximately 150 feet from the intersection with Enon Springs Road, West, and ending at approximately 980 feet from that intersection. The Land Use Plan for this area is the Old Nashville Corridor character area, which would support a mix of neighborhood scale retail uses and personal services that provide markets for local customers. Townhomes, attached residential development, and other multifamily uses are also appropriate. The surrounding zoning is R-2, R-3, R-6, C-2, and C-4.

Summary:
There are existing houses on 4 of the 7 properties. There is an existing 8" sewer line that runs through 3 of these properties. Development of these properties in a commercial manner will require an upgrade in the water service as the existing water main on the east side of Old Nashville Highway is only 2". Three of the requested properties do not meet the minimum lot size requirement in C-2 of 20,000 square feet (Parcels 27.01, 28.00, and 29.00).

The Planning Commission reviewed this request and recommended denial 7 for, 0 against.

Recommended Council Action:
Staff recommends denial.

Attachments:
1. Applications
2. ONH & Enon Springs Rezoning Map Without Zoning
3. ONH & Enon Springs Rezoning Map With Zoning
4. ONH & Enon Springs Rezoning Map With Zoning Zoom
5. Multiple Applicants Old Nashville Highway July 2026 Description

Town of Smyrna

Rezoning Request Application

APPLICANT INFORMATION:		
Name/Company: MITESH PATEL		
Street Address: 2035 JOSE WAY		
City: MURFREESBORO	State: TN	ZIP: 37130
Email: patelmitesh2007@gmail.com	Phone:	

CONTRACTOR/DEVELOPER INFORMATION: CHECK BOX IF SAME AS APPLICANT		
Name/Company:		
Street Address:		
City:	State:	ZIP:
Email:	Phone:	

PROPERTY INFORMATION		
Street Address/Intersecting Streets: OLD NASHVILLE HIGHWAY		
Tax Map: 028M	Group: G	Parcel: 026.01
Requested Lot Area (Square feet/Acres): 0.50 ACRES		
Existing Zoning: C-4	**Requested Zoning:** C-2	
*Current Property Owner (See Note Below): MITESH PATEL		

APPLICANT AUTHORIZATION	
Applicant Signature: M Patel	Date: 06/02/2026

OFFICE USE ONLY		
Staff Initials:	Review Fee:	Date:

- ***If the applicant is not the current property owner, authorization must be provided by the current property owner for the request of rezoning as mandated by State law.***
- Applications are to be submitted no later than 12:00 PM noon on the initial deadline date unless otherwise noted.
- All meetings are held at Smyrna Town Hall - 315 South Lowry Street - at 5:00 PM in the Town Council Chambers.
- All supporting documents must be submitted at the time of application.

Authentisign ID: 030F62D0-545F-F111-8FCA-00224835947A

Town of Smyrna

Rezoning Request Application

APPLICANT INFORMATION:		
Name/Company: Paw Paw Enterprises LLC		
Street Address: 8717 Paw Paw Springs Rd		
City: Smyrna	State: TN	ZIP: 37167
Email: mhoover88@icloud.com	Phone: (615) 594-8181	
CONTRACTOR/DEVELOPER INFORMATION: CHECK BOX IF SAME AS APPLICANT		
Name/Company:		
Street Address:		
City:	State:	ZIP:
Email:	Phone:	
PROPERTY INFORMATION		
Street Address/Intersecting Streets: 13058 Old Nashville Hwy		
Tax Map: 028M	Group: G	Parcel: 030.00
Requested Lot Area (Square feet/Acres): .67 ac +/-		
Existing Zoning: C-4	**Requested Zoning:** C-2	
*Current Property Owner (See Note Below): Paw Paw Enterprises LLC		
APPLICANT AUTHORIZATION		
Applicant Signature: Michael Hoover 06/03/26		Date: 6/3/2026
OFFICE USE ONLY		
Staff Initials:	Review Fee:	Date:

- ***If the applicant is not the current property owner, authorization must be provided by the current property owner for the request of rezoning as mandated by State law.***
- Applications are to be submitted no later than 12:00 PM noon on the initial deadline date unless otherwise noted.
- All meetings are held at Smyrna Town Hall - 315 South Lowry Street - at 5:00 PM in the Town Council Chambers.
- All supporting documents must be submitted at the time of application.

Town of Smyrna

Rezoning Request Application

APPLICANT INFORMATION:		
Name/Company: Navarro Properties LLC		
Street Address: 1720 Salem Rd		
City: Lebanon	State: TN	ZIP: 37090
Email: contactnavarroproperties@gmail.com	Phone: (931) 305-3875	
CONTRACTOR/DEVELOPER INFORMATION: CHECK BOX IF SAME AS APPLICANT ✓		
Name/Company:		
Street Address:		
City:	State:	ZIP:
Email:	Phone:	
PROPERTY INFORMATION		
Street Address/Intersecting Streets: 13014 Old Nashville Hwy		
Tax Map: 028M	Group: G	Parcel: 027.01
Requested Lot Area (Square feet/Acres): .43 ac +/-		
Existing Zoning: R-2	**Requested Zoning:** C-2	
*Current Property Owner (See Note Below): Navarro Properties LLC		
APPLICANT AUTHORIZATION		
Applicant Signature: Arnulfo Navarro Manzano		Date: 06/08/2026
OFFICE USE ONLY		
Staff Initials:	Review Fee:	Date:

- ***If the applicant is not the current property owner, authorization must be provided by the current property owner for the request of rezoning as mandated by State law.***
- Applications are to be submitted no later than 12:00 PM noon on the initial deadline date unless otherwise noted.
- All meetings are held at Smyrna Town Hall - 315 South Lowry Street - at 5:00 PM in the Town Council Chambers.
- All supporting documents must be submitted at the time of application.

DocuSign ID: A588770C-555F-F111-8FCA-0022483594F4

Town of Smyrna

Rezoning Request Application

APPLICANT INFORMATION:		
Name/Company: J & M Equity LLC		
Street Address: 8717 Paw Paw Springs Rd		
City: Smyrna	State: TN	ZIP: 37167
Email: mhoover88@icloud.com	Phone: (615) 594-8181	

CONTRACTOR/DEVELOPER INFORMATION: CHECK BOX IF SAME AS APPLICANT		
Name/Company:		
Street Address:		
City:	State:	ZIP:
Email:	Phone:	

PROPERTY INFORMATION		
Street Address/Intersecting Streets: 13076 Old Nashville Hwy		
Tax Map: 028M	Group: G	Parcel: 033.00
Requested Lot Area (Square feet/Acres): 1.03 ac +/-		
Existing Zoning: C-4	**Requested Zoning:** C-2	
*Current Property Owner (See Note Below): J & M Equity LLC		

APPLICANT AUTHORIZATION			
Applicant Signature: Michael Hoover 06/03/26	Joseph Stanford	Date: 6/3/26	6/3/2026

OFFICE USE ONLY		
Staff Initials:	Review Fee:	Date:

- ***If the applicant is not the current property owner, authorization must be provided by the current property owner for the request of rezoning as mandated by State law.***
- Applications are to be submitted no later than 12:00 PM noon on the initial deadline date unless otherwise noted.
- All meetings are held at Smyrna Town Hall - 315 South Lowry Street - at 5:00 PM in the Town Council Chambers.
- All supporting documents must be submitted at the time of application.

Authentisign ID: A588770C-555F-4111-8FCA-0022483594F4

Town of Smyrna

Rezoning Request Application

APPLICANT INFORMATION:		
Name/Company: J and M Equity LLC		
Street Address: 8717 Paw Paw Springs Rd		
City: Smyrna	State: TN	ZIP: 37167
Email: mhoover88@icloud.com	Phone: (615) 594-8181	

CONTRACTOR/DEVELOPER INFORMATION: CHECK BOX IF SAME AS APPLICANT		
Name/Company:		
Street Address:		
City:	State:	ZIP:
Email:	Phone:	

PROPERTY INFORMATION		
Street Address/Intersecting Streets: 13106 Old Nashville Hwy		
Tax Map: 028M	Group: G	Parcel: 031.00
Requested Lot Area (Square feet/Acres): .76 ac +/-		
Existing Zoning: C-4	**Requested Zoning:** C-2	
*Current Property Owner (See Note Below): J and M Equity LLC		

APPLICANT AUTHORIZATION			
Applicant Signature: Michael Hoover 06/03/26	Joseph Stanford	Date: 06/03/26	6/3/2026

OFFICE USE ONLY		
Staff Initials:	Review Fee:	Date:

- ***If the applicant is not the current property owner, authorization must be provided by the current property owner for the request of rezoning as mandated by State law.***
- Applications are to be submitted no later than 12:00 PM noon on the initial deadline date unless otherwise noted.
- All meetings are held at Smyrna Town Hall - 315 South Lowry Street - at 5:00 PM in the Town Council Chambers.
- All supporting documents must be submitted at the time of application.

Authentisign ID: 14726B7C-565F-F111-8FCA-0022483594F4

Town of Smyrna

Rezoning Request Application

APPLICANT INFORMATION:		
Name/Company: Khairy Abdelmasih Ebram Shalaby Alaa Mankarious Eyd Toss		
Street Address: 667 Pemberton Dr		
City: Lebanon	State: TN	ZIP: 37087
Email: ebram84@yahoo.com	Phone: (615) 738-1259	

CONTRACTOR/DEVELOPER INFORMATION: CHECK BOX IF SAME AS APPLICANT		
Name/Company:		
Street Address:		
City:	State:	ZIP:
Email:	Phone:	

PROPERTY INFORMATION		
Street Address/Intersecting Streets: 13036 Old Nashville Hwy		
Tax Map: 028M	Group: G	Parcel: 029.00
Requested Lot Area (Square feet/Acres): .26 ac +/-		
Existing Zoning: C-4	**Requested Zoning:** C-2	
*Current Property Owner (See Note Below): Abdelmasih, Shalaby, Mankarious, Toss		

APPLICANT AUTHORIZATION				
Applicant Signature: Khairy Abdelmasih	Date: 06/03/26	Ebram Shalaby	Date: 06/03/26	ALAA MANKARIOUS Date: 06/03/26

OFFICE USE ONLY		
Staff Initials:	Review Fee:	Date: 6/3/2026

06/03/26 Authentisign Eyd Toss

- ***If the applicant is not the current property owner, authorization must be provided by the current property owner for the request of rezoning as mandated by State law.***
- Applications are to be submitted no later than 12:00 PM noon on the initial deadline date unless otherwise noted.
- All meetings are held at Smyrna Town Hall - 315 South Lowry Street - at 5:00 PM in the Town Council Chambers.
- All supporting documents must be submitted at the time of application.

Town of Smyrna

Rezoning Request Application

APPLICANT INFORMATION:		
Name/Company: Shams Amraei & Rezvan Moosavi		
Street Address: 1296 Bridgeton Park Dr		
City: Brentwood	State: TN	ZIP: 37027
Email: shamsh4@gmail.com	Phone: (615) 554-1919	
CONTRACTOR/DEVELOPER INFORMATION: CHECK BOX IF SAME AS APPLICANT		
Name/Company:		
Street Address:		
City:	State:	ZIP:
Email:	Phone:	
PROPERTY INFORMATION		
Street Address/Intersecting Streets: 13020 Old Nashville Hwy		
Tax Map: 028M	Group: G	Parcel: 028.00
Requested Lot Area (Square feet/Acres): .34 ac +/-		
Existing Zoning: C-4	**Requested Zoning:** C-2	
*Current Property Owner (See Note Below): Shams Amraei & Rezvan Moosavi		
APPLICANT AUTHORIZATION		
Applicant Signature: Shams Amraei (Jun 8, 2026 10:58:21 CDT) Rezvan Moosavi (Jun 8, 2026 18:57:14 CDT)		Date:
OFFICE USE ONLY		
Staff Initials:	Review Fee:	Date:

- ***If the applicant is not the current property owner, authorization must be provided by the current property owner for the request of rezoning as mandated by State law.***
- Applications are to be submitted no later than 12:00 PM noon on the initial deadline date unless otherwise noted.
- All meetings are held at Smyrna Town Hall - 315 South Lowry Street - at 5:00 PM in the Town Council Chambers.
- All supporting documents must be submitted at the time of application.

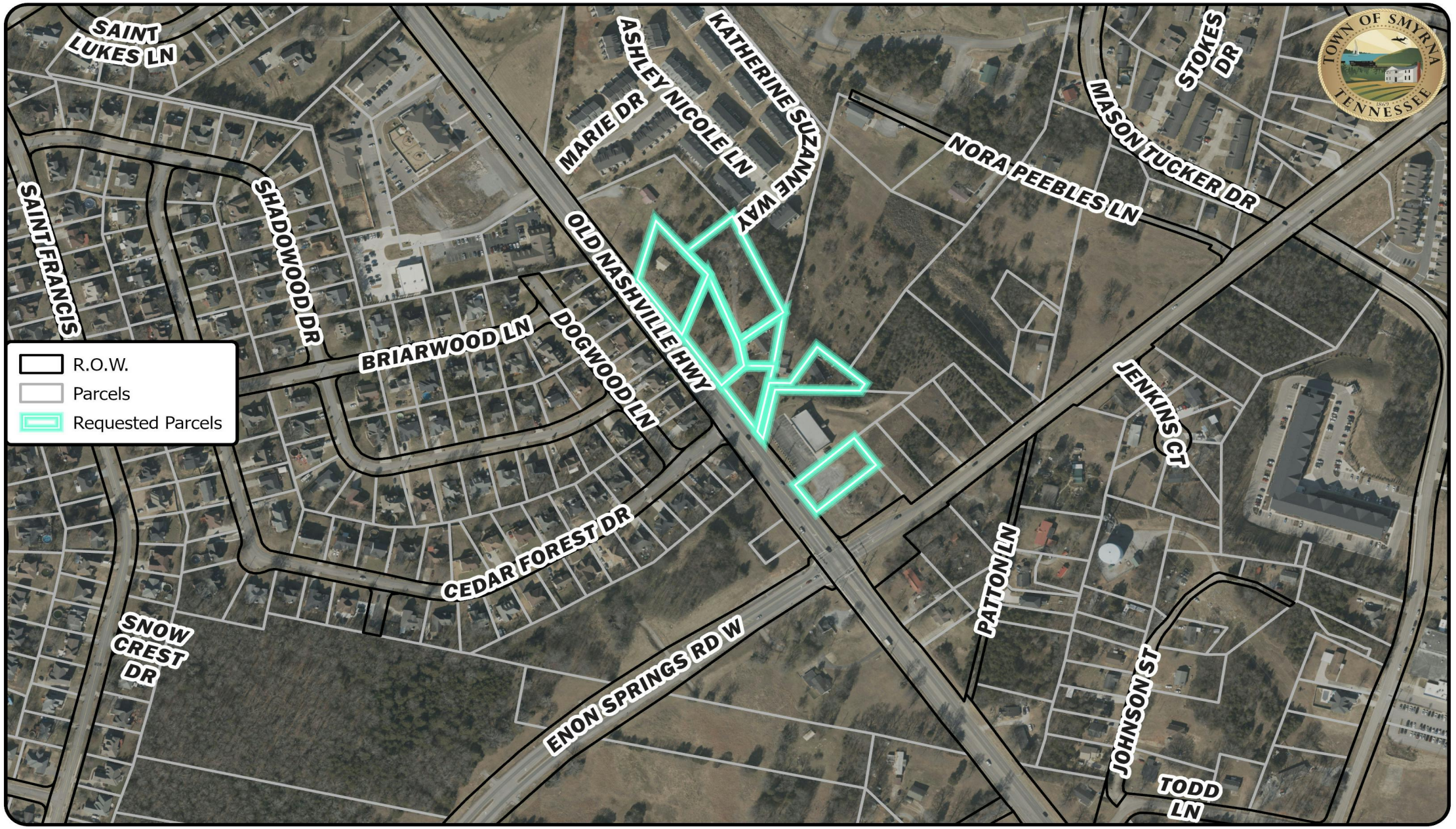

R-2 & C-4 to C-2 Rezoning Request

13014, 13020, 13036, 13058, 13076 & 13103 Old Nashville Highway

Tax Map: 28M | Group: G | Parcels: 26.01, 27.01, 28.00, 29.00, 30.00, 31.00 & 33.00 | Total Acres: +/- 3.97

N

0 230 460 Feet

Owners: Mitesh Patel, Navarro Properties LLC, Shams Amraie, Rezvan Moosavi, Khairy Abdelmasih, Ebram Shalaby, Paw Paw Enterprises LLC, J & M Equity LLC

Coordinate System: NAD 1983 StatePlane Tennessee FIPS 4100 Feet

Metro Nashville Gov't, Rutherford County, TN, Esri, TomTom, Garmin, SafeGraph, GeoTechnologies, Inc, METI/NASA,

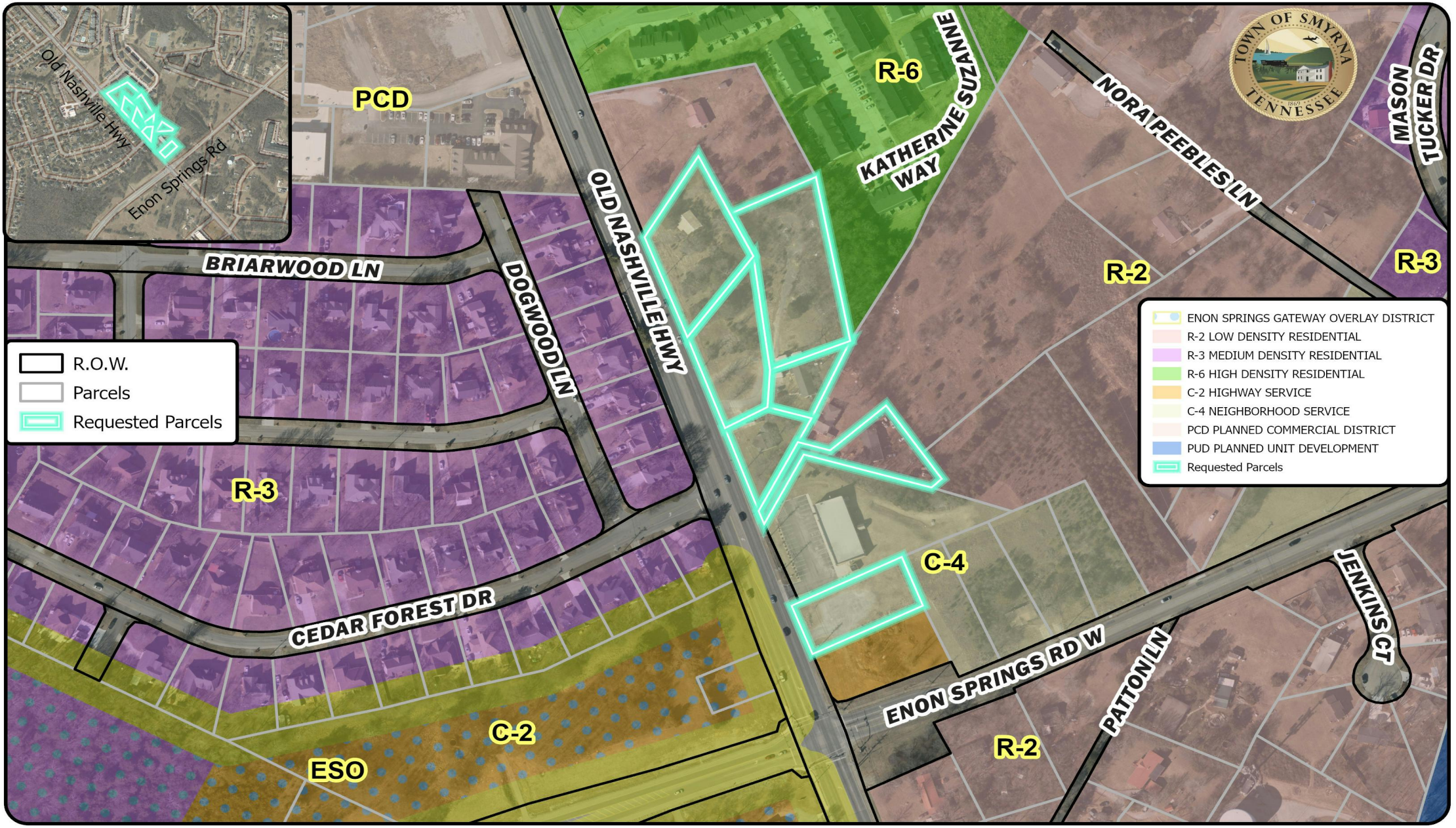

R-2 & C-4 to C-2 Rezoning Request

13014, 13020, 13036, 13058, 13076 & 13103 Old Nashville Highway

Tax Map: 28M | Group: G | Parcels: 26.01, 27.01, 28.00, 29.00, 30.00, 31.00 & 33.00 | Total Acres: +/- 3.97

N

0 145 290 Feet

Owners: Mitesh Patel, Navarro Properties LLC, Shams Amraie, Rezvan Moosavi, Khairy Abdelmasih, Ebram Shalaby, Paw Paw Enterprises LLC, J & M Equity LLC

Coordinate System: NAD 1983 StatePlane Tennessee FIPS 4100 Feet

Metro Nashville Gov't, Rutherford County, TN, Esri, TomTom, Garmin, SafeGraph, GeoTechnologies, Inc, METI/NASA,

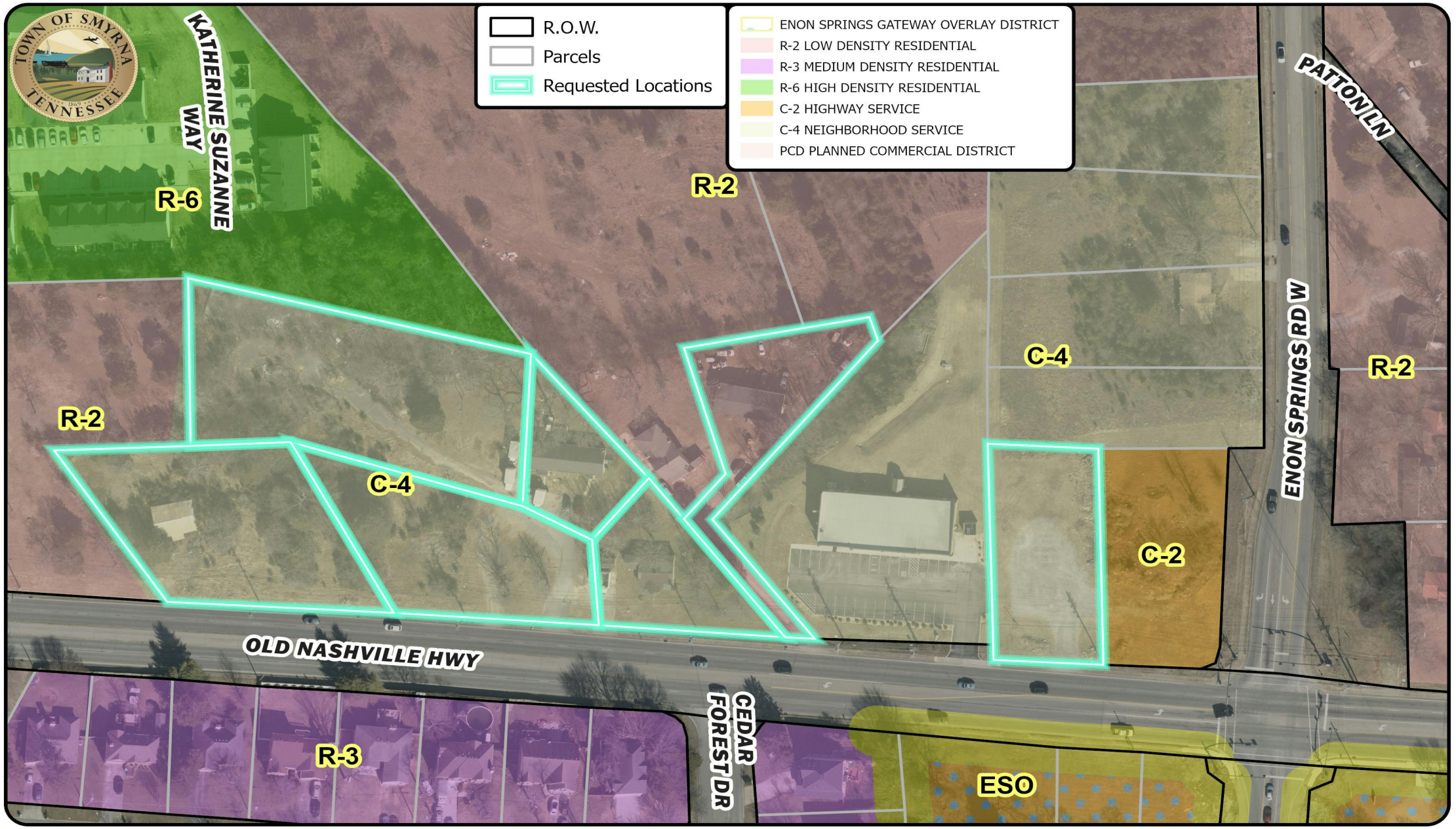

R-2 & C-4 to C-2 Rezoning Request

13014, 13020, 13036, 13058, 13076 & 13103 Old Nashville Highway

Tax Map: 28M | Group: G | Parcels: 26.01, 27.01, 28.00, 29.00, 30.00, 31.00 & 33.00 | Total Acres: +/- 3.97

0 75 150 Feet

Owners: Mitesh Patel, Navarro Properties LLC, Shams Amraie, Rezvan Moosavi, Khairy Abdelmasih, Ebram Shalaby, Paw Paw Enterprises LLC, J & M Equity LLC

Coordinate System: NAD 1983 StatePlane Tennessee FIPS 4100 Feet

Metro Nashville Gov't, Rutherford County, TN, Esri, TomTom, Garmin, SafeGraph, GeoTechnologies, Inc, METI/NASA,

Mitesh Patel, Paw Paw Enterprises, LLC, J & M Equity, LLC, Khairy Abdelmasih, Ebram Shalaby, Alaa Mankarious, & Eyd Toss, Shams Amraei & Rezvan Moosavi - Rezoning Request from C-4 to C-2

Navarro Properties, LLC - Rezoning Request from R-2 to C-2

Tax Map 28M, Group G, Parcel 26.01, owned and requested by Mitesh Patel; Parcel 28.00, owned and requested by Shams Amraei and Rezvan Moosavi; Parcel 29.00, owned and requested by Khairy Abdelmasih, Ebram Shalaby, Alaa Mankarious, & Eyd Toss; Parcel 30.00, owned and requested by Paw Paw Enterprises, LLC; Parcels 31.00 & 33.00, owned and requested by J & M Equity, LLC; and Parcel 27.01, owned and requested by Navarro Properties, LLC.

Bordered on the south and east by Parcel 26.00, owned by GVHR, LLC, Parcel 25.01, owned by the Joe Richardson Estate, and Parcel 27.00, owned by Steven O'Riley; on the east by Parcel 22.00, owned by the Joe Richardson Estate, Parcel 34.00, owned by Ellen C. Mayes, and by the Midway Townhomes development; on the north by Parcel 32.00, owned by Richard E. and Nannie Ransom; and on the west by the right-of-way of Old Nashville Highway.

Area requested to be rezoned from C-4 to C-2 and R-2 to C-2 contains approximately 3.99 acres.

Town of Smyrna
Town Council Meeting
Agenda Summary

Agenda Item Number 7.b.
Department: Finance
Date: July 14, 2026

Subject:
Consideration of a Resolution to approve funding for non-profit organizations for the fiscal year 2027.

Fiscal Impact:
$977,237 from Health, Welfare and Culture budget appropriation. Funds will be paid half in July 2026 and the remainder in January 2027.

Contract Type:

Contract Term (if applicable):

Background:
The Town of Smyrna has determined that there are a great number of non-profit organizations that make significant contributions to the health, education and welfare of our citizens and deems it to be in the public interest to contribute to worthy organizations that benefit the welfare of its citizens.

Summary:
Funding is to provide sufficient resources necessary to sustain a high level of community services for the citizens of Smyrna.

Recommended Council Action:
Staff recommends approval of the Resolution.

Attachments:
1. Resolution #26-13- 2026-27 Non-Profits Resolution
2. 2026-2027 Nonprofit Budget

TOWN OF SMYRNA, TENNESSEE
RESOLUTION NO. ___-____

A RESOLUTION appropriating funds for non-profit organizations.

WHEREAS, it has been determined that there are a great number of non-profit organizations that make significant contributions to the health, education and welfare of our citizens; and,

WHEREAS, the Town of Smyrna deems it to be in the public interest to contribute to worthy organizations that contribute to the welfare of its citizens.

NOW, THEREFORE, BE IT RESOLVED BY THE TOWN COUNCIL OF THE TOWN OF SMYRNA THAT:

1. The following non-profit organizations be granted the following sums for 2026-2027:

Agency	Purpose	Amount
Rutherford Co. Dept. of Health	Operating Cost	$4,500
Rutherford Co. Library System-Smyrna	Operating Cost	447,324
Rutherford Co. Chamber of Commerce	Tourism	20,000
Sister City-Zama	Operating Cost	12,000
Sam Davis Memorial Association	Operating Cost	15,000
Rutherford Co. Pet Adoption & Welfare Svcs	Operating Cost	41,200
Community TN Rehabilitation Center	Operating Cost	3,713
Rutherford Co. Chamber of Commerce	Economic Development	100,000
Rutherford Co. Emergency Mgmt Agency	Operating Cost	24,500
Child Advocacy Center	Operating Cost	24,000
Child Advocacy Center	Capital Cost	250,000
Smyrna Charity Assistance Fund	Operating Cost	35,000
Total		**$977,237**

2. This resolution shall take effect immediately upon its adoption, the public welfare requiring it.

ADOPTED by the Town Council on the 14th day of July, 2026.

TOWN OF SMYRNA, TENNESSEE

_____
BY: MARY ESTHER REED, Mayor

ATTEST:

_____
AMBER HOBBS, Town Clerk

HEALTH, WELFARE & CULTURE

PURPOSE STATEMENT

THE POLICY OF THE TOWN OF SMYRNA FOR HEALTH, WELFARE, & CULTURE (NON-PROFIT ORGANIZATIONS) FUNDING IS TO PROVIDE SUFFICIENT RESOURCES NECESSARY TO SUSTAIN A HIGH LEVEL OF COMMUNITY SERVICES FOR THE CITIZENS OF SMYRNA.

ACCT	DESCRIPTION	2023-2024 ACTUAL	2024-2025 ACTUAL	2025-2026 AMENDED	2025-2026 ESTIMATED	2026-2027 REQUESTED	2026-2027 RECOMMEND	2026-2027 ADOPTED
110-44000								
	INTERGOVERNMENTAL							
721	RUTHERFORD CO. DEPT OF HEALTH	4,500	4,500	4,500	4,500	4,500	4,500	4,500
724	SMYRNA LINEBAUGH LIBRARY OPER BUD	423,450	423,450	447,324	447,324	591,763	447,324	447,324
766	SMYRNA LINEBAUGH LIBRARY CAPITAL	-	-	-	-	75,206	-	-
729	RUTHERFORD CO RABIES CONTROL	40,000	40,000	40,000	40,000	41,200	41,200	41,200
758	TN REHABILITATION CENTER (TN-TRC)	3,500	3,500	3,605	3,605	3,713	3,713	3,713
765	RUTHERFORD CO. EMERG MGMT AGENCY	18,413	18,796	23,000	23,000	24,500	24,500	24,500
	INTERGOVERNMENTAL SUB-TOTAL	**489,863**	**490,246**	**518,429**	**518,429**	**740,882**	**521,237**	**521,237**
	NONPROFIT COMMUNITY DEVELOPMENT							
725	RUTHERFORD CO CHAMBER-TOURISM	20,000	20,000	20,000	20,000	20,000	20,000	20,000
742	RUTHERFORD CO. CHAMBER-ECON. DEV.	25,000	25,000	25,000	25,000	25,000	25,000	25,000
745	RUTHERFORD CO. CHAMBER-DEST. RUTH.	75,000	75,000	75,000	75,000	75,000	75,000	75,000
757	SISTER CITY-ZAMA	12,000	12,000	12,000	12,000	12,000	12,000	12,000
728	SAM DAVIS MEMORIAL ASSOC.	15,000	15,000	15,000	15,000	15,000	15,000	15,000
767	TRANSIT ALLIANCE OF MIDDLE TN	500	500	500	500	-	-	-
	NONPROFIT COMM. DEV. SUB-TOTAL	**147,500**	**147,500**	**147,500**	**147,500**	**147,000**	**147,000**	**147,000**
	NONPROFIT OTHER							
762	CHILD ADVOCACY CENTER OPER BUD	24,000	24,000	24,000	24,000	24,000	24,000	24,000
768	CHILD ADVOCACY CENTER CAPITAL	-	-	-	-	250,000	250,000	250,000
764	SMYRNA CHARITY ASSISTANCE FUND	35,000	35,000	35,000	35,000	35,000	35,000	35,000
	NONPROFIT OTHER SUB-TOTAL	**59,000**	**59,000**	**59,000**	**59,000**	**309,000**	**309,000**	**309,000**
	TOTAL HEALTH, WELFARE & CULTURE	**696,363**	**696,746**	**724,929**	**724,929**	**1,196,882**	**977,237**	**977,237**

Town of Smyrna
Town Council Meeting
Agenda Summary

Agenda Item Number 7.c.
Department: Administration
Date: July 14, 2026

Subject:
Consideration of a Resolution authorizing the photographic or electronic preservation and subsequent disposal of permanent paper records of the Town of Smyrna.

Fiscal Impact:
N/A

Contract Type:

Contract Term (if applicable):
N/A

Background:
The Town Clerk's office, Court Clerk's office, and the Human Resources department have been working with Starpoint Imaging Services to digitize their departments' respective paper records. Subsequently, each department has been in the process of customization and implementation of MCCi's LaserFiche, an Enterprise Content Management platform, in order to store and maintain said records. Starpoint will include six (6) months of physical storage of both original hard copies and digitized data at no additional cost. After six (6) months, the Town has the choice of certified destruction of the record, continued storage (for a fee), or return of the documents.

Summary:
Tenn. Code Ann. §10-7-702 authorizes the governing body of a municipality, by resolution, to dispose of any permanent paper record of the municipality when such record has been preserved by an approved photographic or electronic process in compliance with Tenn. Code Ann. §10-7-121.

The Town of Smyrna contracted with MCCi- LaserFiche and Starpoint Imaging Services on February 10, 2026, and is nearing completion of the digitization portion of the project in order to import the electronic record to LaserFiche for future preservation. Once all records have been properly digitized and quality control checked, each office seeks authorization for the continued photographic or electronic preservation and subsequent disposal of permanent paper records in order to automate and optimize business processes.

Recommended Council Action:

Staff recommends authorization, by resolution, to dispose of any permanent paper record of the municipality when such record has been preserved by an approved photographic or electronic process in compliance with Tenn. Code Ann. §10-7-121.

Attachments:

1. Resolution #26-14 (Electronic Record Preservation and Disposal)

TOWN OF SMYRNA, TENNESSEE
RESOLUTION 26-14

A RESOLUTION authorizing the photographic or electronic preservation and subsequent disposal of permanent paper records of the Town of Smyrna, Tennessee in accordance with Tennessee Code Annotated §10-7-702.

WHEREAS, Tenn. Code Ann. §10-7-702 authorizes the governing body of a municipality, by resolution, to dispose of any permanent paper record of the municipality when such record has been preserved by an approved photographic or electronic process in compliance with Tenn. Code Ann. §10-7-121; and

WHEREAS, the Town Council seeks to ensure the secure, efficient, and cost-effective storage and retrieval of permanent records through authorized digital and photographic preservation methods; and

WHEREAS, the preservation of records in a photographic or electronic format, including but not limited to, photocopying, photo stating, filming, microfilming, microphotographic processing, or reproduction onto computer media or other appropriate electronic media, allows for safe and reliable storage and retrieval, while reducing physical storage needs.

NOW, THEREFORE, BE IT RESOLVED by the Town Council of the Town of Smyrna, as follows:

SECTION 1. In accordance with Tenn. Code Ann. §10-7-702, the Town Council of the Town of Smyrna hereby authorizes the disposal of any permanent paper record of the Town of Smyrna that has been appropriately preserved by any of the following means: photocopying, photo stating, filming, microfilming, microphotographic process, or reproduction onto computer or removable computer media, or any other appropriate electronic medium, as authorized by Tenn. Code Ann. §10-7-121.

SECTION 2. All photographic or electronic reproductions of permanent records must be made in compliance with state law and maintained in a manner that ensures their continued accessibility and integrity for the duration of their required retention period.

SECTION 3. This Resolution shall be effective immediately on its passage.

ADOPTED by the Town Council the _____ day of July, 2026.

TOWN OF SMYRNA, TENNESSEE

_____
MARY ESTHER REED, Mayor

ATTEST: _____

AMBER HOBBS, Town Clerk

STATE SHARED TAX COMPARISON

Month	2019-2020 Monthly Total	2020-2021 Monthly Total	2021-2022 Monthly Total	2022-2023 Monthly Total	2023-2024 Monthly Total	2024-2025 Monthly Total	2025-2026 Monthly Total	2025-2026 Cumulative Total	Cumulative Change From Prior Year	Monthly Change From Prior Year
July	$538,607	$569,227	$675,704	$750,938	$770,508	$784,583	$799,150	$799,150	1.86%	1.86%
August	$490,350	$505,650	$637,125	$642,853	$640,156	$648,895	$679,574	$1,478,724	3.16%	4.73%
September	$545,010	$543,837	$654,051	$688,813	$723,602	$762,463	$778,047	$2,256,771	2.77%	2.04%
October	$535,795	$561,777	$670,111	$732,715	$720,068	$758,074	$790,589	$3,047,360	3.16%	4.29%
November	$539,986	$562,873	$661,082	$708,770	$700,782	$759,740	$772,514	$3,819,874	2.86%	1.68%
December	$538,242	$546,193	$678,744	$701,643	$715,102	$741,754	$743,017	$4,562,891	2.41%	0.17%
January	$639,967	$701,428	$784,248	$823,609	$932,749	$873,761	$903,431	$5,466,322	2.57%	3.40%
February	$493,603	$543,003	$605,312	$654,525	$638,086	$669,404	$665,576	$6,131,898	2.22%	-0.57%
March	$472,865	$483,643	$597,747	$626,857	$667,651	$664,131	$685,122	$6,817,020	2.31%	3.16%
April	$511,986	$667,669	$762,848	$773,106	$785,084	$805,026	$839,026	$7,656,046	2.52%	4.22%
May	$420,817	$654,013	$709,081	$726,153	$738,889	$767,217	$784,472	$8,440,518	2.50%	2.25%
June	$518,069	$632,775	$738,292	$747,334	$763,902	$783,788			-	-
Fiscal Year Total	**$6,245,296**	**$6,972,088**	**$8,174,345**	**$8,577,317**	**$8,796,579**	**$9,018,836**	**$8,440,518**			
Increase Over Prior Yr	**1.6%**	**11.6%**	**17.2%**	**4.9%**	**2.6%**	**2.5%**				

$9,366,000 2025-2026 BUDGET

90.12% of Budget

91.67% of Year

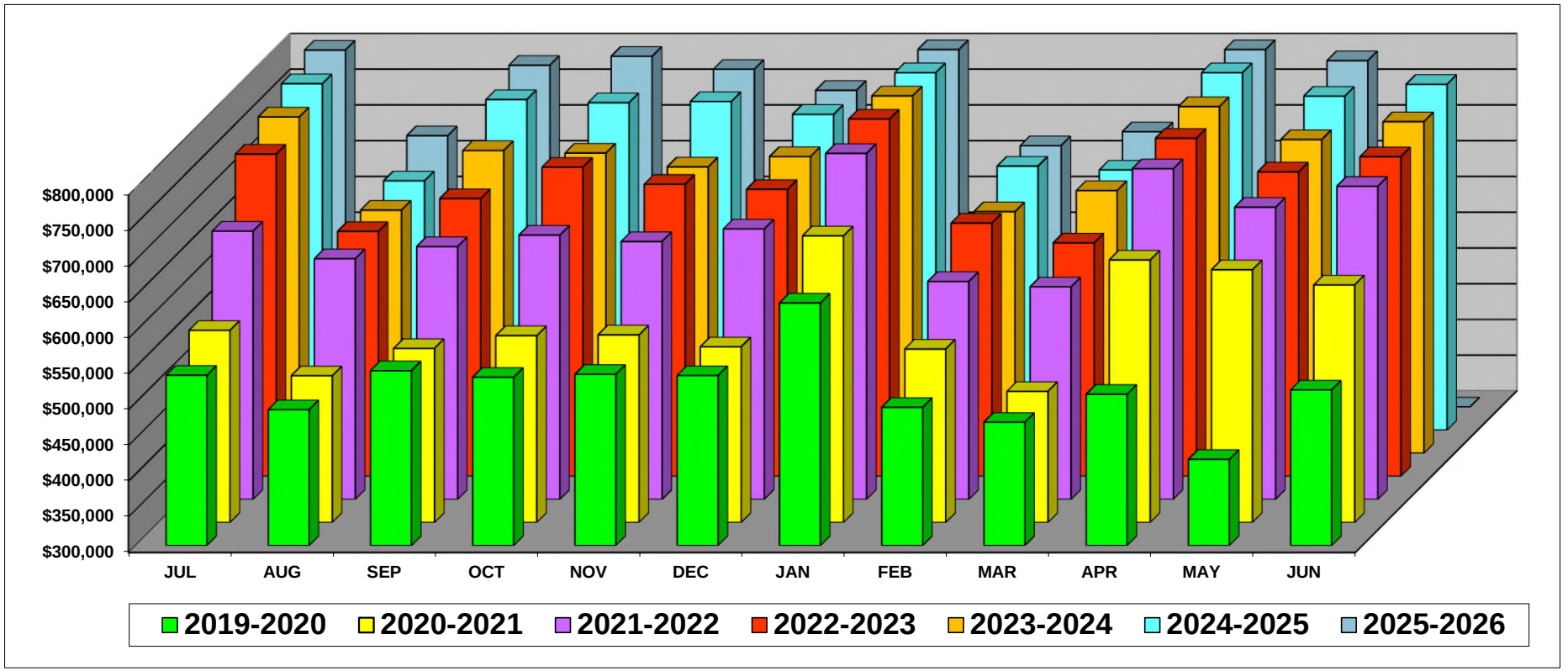

LOCAL SALES TAX COMPARISON

Month	2019-2020 Monthly Total	2020-2021 Monthly Total	2021-2022 Monthly Total	2022-2023 Monthly Total	2023-2024 Monthly Total	2024-2025 Monthly Total	2025-2026 Monthly Total	2025-2026 Cumulative Total	Cumulative Change From Prior Year	Monthly Change From Prior Year
July	$1,312,882	$1,390,327	$1,509,514	$1,650,638	$1,789,943	$1,815,261	$1,867,607	$1,867,607	2.88%	2.88%
August	$1,135,971	$1,247,023	$1,452,861	$1,599,124	$1,657,278	$1,706,139	$1,786,616	$3,654,223	3.77%	4.72%
September	$1,090,456	$1,171,964	$1,369,684	$1,462,909	$1,611,573	$1,724,292	$1,792,206	$5,446,429	3.83%	3.94%
October	$1,258,630	$1,229,619	$1,422,373	$1,582,132	$1,619,480	$1,709,348	$1,815,394	$7,261,823	4.41%	6.20%
November	$1,127,668	$1,236,004	$1,445,358	$1,652,887	$1,662,363	$1,775,059	$1,820,928	$9,082,751	4.04%	2.58%
December	$1,165,293	$1,262,502	$1,534,530	$1,628,335	$1,656,329	$1,742,705	$1,760,233	$10,842,984	3.53%	1.01%
January	$1,670,399	$1,784,627	$1,773,435	$1,973,137	$2,127,344	$2,165,424	$2,105,219	$12,948,203	2.45%	-2.78%
February	$1,027,159	$1,251,752	$1,326,843	$1,518,119	$1,528,565	$1,601,289	$1,579,650	$14,527,853	2.02%	-1.35%
March	$1,045,378	$1,091,353	$1,346,157	$1,478,814	$1,558,258	$1,600,418	$1,616,298	$16,144,151	1.92%	0.99%
April	$1,277,864	$1,525,934	$1,649,321	$1,784,941	$1,807,516	$1,839,663	$1,908,267	$18,052,418	2.11%	3.73%
May	$1,078,328	$1,471,223	$1,625,558	$1,675,329	$1,737,779	$1,777,235	$1,838,413	$19,890,831	2.23%	3.44%
June	$1,208,953	$1,444,368	$1,835,710	$1,726,626	$1,752,031	$1,788,549			-	-
Fiscal Year Total	**$14,398,978**	**$16,106,697**	**$18,291,344**	**$19,732,991**	**$20,508,458**	**$21,245,383**	**$19,890,831**			
								$21,836,000	**2025-2026 Budget**	**110-31610**
Incease Over Prior Yr	**3.0%**	**11.9%**	**13.6%**	**7.9%**	**3.9%**	**3.6%**		91.09%	of Budget	
								91.67%	of Year	

