TOWN OF SMYRNA
BEER BOARD AGENDA
August 3, 2026
Council Chambers, Town Hall
5:00 PM

1. **Call to Order**

2. **Pledge of Allegiance**

3. **Citizen Comments**

4. **Approval or Correction of Minutes**

   June 1, 2026, regular meeting

5. **Old Business**

6. **New Business**

   a. **PUBLIC HEARING**: City Barbeque Holdings, LLC dba City Barbeque, 110 W Sam Ridley Parkway, Smyrna (City Barbeque Holdings, LLC, Owner) – On-Premise permit application.

   b. **PUBLIC HEARING**: Kroger Limited Partnership I dba Kroger #555, 500 Bulldog Drive, Smyrna (Joshua Gaither, Manager) - Off-Premise permit application.

   c. **PUBLIC HEARING**: Jonathan's Grille-Smyrna, LLC, 160 W Sam Ridley Parkway, Smyrna (Mason Revelette, Owner) – On Premise permit application.

7. **Set date for September 2026 meeting**

8. **Reports of Officers, Committees, or Staff**

9. **Adjournment**

TOWN OF SMYRNA

BEER BOARD
AGENDA

MINUTES

June 1, 2026 **5:00 PM**

1. Call to Order

The meeting was called to order by Chairperson Amy Harrison, at 5:01 p.m. at Town Hall, Smyrna, Tennessee.

Chairperson Amy Harrison, Vice-Chairperson Jennifer Brittain and Board Members Jesse Bobick and Eric Duchanin were present for the meeting. Staff Attorney Benjamin Groce and Town Clerk Amber Hobbs were also in attendance. Board Member Jacqueline Redmond was not present for this meeting.

2. Pledge of Allegiance

The pledge of allegiance was led by Chairperson Amy Harrison.

3. Citizen Comments

There were no citizen comments at this time.

4. Approval or Correction of Minutes

May 4, 2026, Beer Board meeting

Next, Board Member Jennifer Brittain made a motion to approve the minutes of the May 4, 2026, Beer Board meeting. Board Member Jesse Bobick seconded the motion. Following further discussion, the minutes were approved 4-0.

5. Old Business

There was no Old Business before the Board at this time.

6. New Business

6.a. PUBLIC HEARING: Shankram LLC dba Curry Up Now, 2160 Rock Springs Road, Suite 600, Smyrna (Harsh Patel and Vimal Patel, Owners) – On-Premise permit application.

The Board next considered under new business an application for an on-premise permit for Shankram LLC dba Curry Up Now, 2160 Rock Springs Road, Suite 600, Smyrna. Owner, Vimal Patel, spoke concerning the application. Following discussion, Board Member Eric Duchanin made a motion to approve the on-premise permit for this location. Board Member Jesse Bobick seconded the motion. Following further discussion, the motion was approved 4-0. A copy of said application is attached and

incorporated herein by reference as Exhibit "1".

6.b. <u>PUBLIC HEARING</u>: Smyrna Public Library "Walking Through History" Event on August 1, 2026, 400 Enon Springs Rd. West, Smyrna (Cassandra Taylor, Branch Manager) – Special Event permit application.

The Board next considered under new business an application for a special-event permit for the "Walking Through History" event at the Smyrna Public Library on August 1, 2026. Branch Manager, Cassandra Taylor, spoke concerning the application. Following discussion, Board Member Jennifer Brittain made a motion to approve the special-event permit for August 1, 2026. Board Member Jesse Bobick seconded the motion. Following further discussion, the motion was approved 4-0. A copy of said application is attached and incorporated herein by reference as Exhibit "2".

7. Set date for July 2026 meeting

The July meeting of the Beer Board will be held on Monday, July 6, 2026.

8. Reports of Officers, Committees, or Staff

9. Adjournment

Following discussion, Board Member Jesse Bobick made a motion to adjourn. Board Member Jennifer Brittain seconded the motion. Following further discussion, the motion was approved 4-0 and the meeting adjourned at 5:11 p.m.

Town of Smyrna, Tennessee

_____

Amy Harrison, Chairperson

Attest:

_____

Amber Hobbs, Town Clerk

BEER PERMIT APPLICATION FORM
ON-PREMISE
Town of Smyrna, Tennessee

PLEASE COMPLETE THE BELOW BEER PERMIT APPLICATION FORM IN ITS ENTIRETY. IF A QUESTION DOES NOT APPLY TO YOU, PLEASE INDICATE BY MARKING YOUR ANSWER AS "Not Applicable" OR "N/A". THE BEER PERMIT APPLICATION WILL NOT BE PLACED ON THE BEER BOARD AGENDA UNTIL THE APPLICATION FORM IS COMPLETE.

THIS IS AN APPLICATION FOR:

☒ ON-PREMISE CONSUMPTION PERMIT

I HEREBY MAKE APPLICATION FOR A PERMIT TO SELL, STORE, MANUFACTURE, OR DISTRIBUTE BEER OR OTHER BEVERAGES AUTHORIZED TO BE SOLD, STORED, MANUFACTURED OR DISTRIBUTED UNDER THE PROVISION OF *TENNESSEE CODE ANNOTATED (TCA)* § 57-5-101 ET SEQ. AND THE PROVISIONS IN TITLE 8 OF THE MUNICIPAL CODE OF THE TOWN OF SMYRNA, TENNESSEE, AND I BASE MY APPLICATION UPON THE ANSWERS TO THE FOLLOWING QUESTIONS.

1. Full Name of Applicant (Owner): City Barbeque, LLC

   Person___ Partnership___ Corporation___ Limited Liability Co.X__ Association___

2. **All individuals, partnerships, corporations, or associations having at least a 5% ownership interest in the business must complete a separate Beer Permit Owner Application Form. (Individuals having at least a 5% ownership interest in the business must be at least 21 years of age.)**

   City Barbeque Holdings, LLC

3. What is your present home address?

[redacted] Antioch, TN 37013

4. What were your previous home addresses within the last ten years?

5005 Crestwood Dr Schertz, TX 78108

5. Date of birth of applicant: [redacted]

Place of birth: Guadalajara ,Mexico

Social Security Number: [redacted]

Driver's License Number: [redacted] Expiration: 2/11/2033 State: TN

American Citizen X or Legal Resident Alien _____

6. Home telephone number: [redacted]

7. Business telephone number: Pending

8. Email address: djordan@citybbq.com

9. Under what name will this business operate? City Barbeque
[Permits shall be issued in the applicant's name with a dba designation.]

State the proposed name in which the Beer Permit shall be issued:

City Barbeque, LLC

10. What is the purpose and intended use of the Beer Permit?

Restaurant

11. Location of business by street address or other geographical description:

110 W Sam Ridley Parkway, Smyrna, TN 37167

Phone number of business: Pending

12. Specify the identity and address of the person responsible to receive annual privilege tax notices and any other correspondence.

City Barbeque - 5168 Blazer Parkway, Dublin, OH 43017

13. Give the name and address of the property owner, if different from the business owner.

Sewarts Landing Partners, L.P. - 3201 Trevor St., Ste. 200, Nashville, TN 37209

14. Will the permit be used to operate two or more restaurants or other businesses under the same permit as permitted by *TCA* § 57-5-103(a)(4) within the same building?

Yes _____ No X

If yes, specify number _____. List the names of the restaurants or other businesses and describe their location (use additional sheet if necessary).

N/A

15. How many managers are currently employed? 3
Please state the full name of each manager currently employed.

Daniel Jordan

Dustin Glover

[redacted]

How many managers do you anticipate hiring? 0

[Management Team Information must be completed and submitted to the Town of Smyrna at the time application. A Management Team Information form must be completed for any managers who are hired and/or promoted after the granting of a beer permit within five (5) days of hiring. Failure to supply such information or update provided information may result in the revocation or suspension of a beer permit.]

16. Provide the following as applicable: ***Article of Incorporation, Partnership Agreement, or L.L.C. Operating Agreement;*** specifically the percent of ownership (private info may be redacted) *PLEASE ATTACH*

17. Has any person having at least a 5% ownership interest or any other employee of the business been convicted of any violation of the beer or alcoholic beverage laws or any crime (other than minor traffic violations) in the State of Tennessee or any other state within the last ten (10) years?

Yes _____ No X

If yes, give particulars of each charge, court, and date convicted.

_____

_____

Has any person having at least a 5% ownership interest or any other employee of the business been convicted of any crime violating a drug or alcohol law in the State of Tennessee or any other state within the last ten (10) years ?

Yes _____ No X

If yes, give particulars of each charge, court, and date convicted.

_____

_____

Has any person having at least a 5% ownership interest or any other employee of the business been convicted of any crime involving physical violence in the State of Tennessee or any other state within the last ten (10) years?

Yes _____ No X

If yes, give particulars of each charge, court, and date convicted.

_____

Is any person having at least a 5% ownership interest or any other employee of the business currently facing pending criminal charges?

Yes _____ No X

If yes, please state the date the charge was initiated, the nature of the charge the individual is currently facing, and the status of the pending charge.

_____

_____

18. Has this owner or the owners of the organization ever had a beer permit revoked, suspended, or denied in the State of Tennessee?

Yes _____ No X

If yes, specify where, when and why.

_____

_____

19. Give the name, **relationship to applicant** (if applicable) and address of the former beer permittee at this location.

General manager

_____

IT IS THE RESPONSIBILTY OF THE APPLICANT TO READ THE TOWN OF SMYRNA'S ADOPTED ORDINANCE AS PERTAINING TO DISTANCES OF ANY SCHOOL, CHURCH, FUNERAL HOME, HOSPITAL, LICENSED DAY CARE FACILITY, OR OTHER PLACE OF PUBLIC GATHERING AS IT RELATES TO THE SALE, STORAGE, AND MANUFACTURE OF BEER AND LIKE BEVERAGES.

20. What is the name and address of the church or other place of worship nearest to your business?

Mosaico Church - 701 President Pl, Smyrna, TN 37167

21. What is the name and address of the school nearest to your business?

Motlow State Community College - 5002 Motlow College Blvd., Smryna, TN 37167

22. What is the name and address of the owner of the nearest funeral home to your business?

Woodfin Funeral Chapel - 203 N. Lowry St., Smyrna, TN 37167

23. What is the name and address of the owner of the nearest hospital to your business?

TriStar StoneCrest Medical Center - 200 StoneCrest Blvd., Smyrna, TN 37167

24. What is the name and address of the owner of the nearest day care facility to your business?

The Gingerbread House Childcare Learning Center - 253 Sam Ridley W, Smyrna, TN 37167

24. Provide a complete list of the food preparation facilities and an accurate account of food preparation/ storage appliances for the business:

Meat smokers(3) Convection ovens(2) Electric steam kettles(2) Electric induction cooktop(2)

Walk-in refridgerator , Stand up freezer, production cooler, hot holding steam tables

25. Attach the available menu for the business if available (preferred) or list the food items to be sold at the location:

SEE ATTACHED

26. List previous experience of operation of an On-Premise alcohol sale business:

ML Rose Craft Beer and Burgers 4408 Charolotte Ave Nashville TN 37209

Cracker Barrel 6330 N Interstate 35 San Antonio, TX 78218

NO PERMIT SHALL BE ISSUED TO SELL BEER OR OTHER BEVERAGE COMING WITHIN THE PROVISIONS OF THIS CHAPTER IN VIOLATION OF ANY PROVISION OF STATE LAW, OR WHERE SUCH SALE WILL CAUSE CONGESTION OF TRAFFIC OR WILL INTERFERE WITH SCHOOLS, CHURCHES, OR OTHER PLACES OF PUBLIC GATHERING, OR WILL OTHERWISE INTERFERE WITH THE PUBLIC HEALTH, SAFETY, OR MORALS. ***(Smyrna Municipal Code Section 8-214)***

VERIFICATION

STATE OF Tennessee }

}

COUNTY OF Davidson }

I, Daniel Jordan, applicant herein, hereby state under oath the following:

I hereby certify that no person having at least a 5% ownership interest, nor any person to be employed in the distribution or sale of beer in my establishment, has been convicted of any violation of the beer or alcoholic beverage laws, convicted of any crime violating any drug or alcohol law, convicted of a crime involving physical violence, or any crime involving moral turpitude within the past ten years.

I further agree to update information related to ownership and management as ownership and management change.

I am also aware that I shall not be issued a permit or my permit shall be revoked, if my business location causes traffic congestion or interferes with schools, churches or other places of public gathering, or otherwise interferes with public health, safety and morals.

I also certify that I have received a copy of the Town of Smyrna Beer Ordinance and the By-Laws and Rules of Procedure of the Smyrna Beer Board of Rutherford County, Tennessee. I state that I have read and understand the Beer Ordinance and the By-Laws. I further state that I am familiar with and understand the laws of the State of Tennessee related to the sale of beer. I further agree to abide by the Town of Smyrna Beer Ordinance and the laws of the State of Tennessee related to the sale of beer.

I further state that the information provided herein is true and correct. I understand that the information I have provided is subject to verification. By my signature below, I authorize and give consent for the Town of Smyrna to perform or obtain from a third party or outside agency a background check. This includes the following:

- Criminal background records/information
- Addresses
- Social Security Verification

I, the undersigned, authorize this information to be obtained either in writing or via telephone in connection with this beer permit application. Any person, firm or organization providing information or records in accordance with this authorization is released from any and all claims of liability for compliance. Such information will be held in confidence in accordance with the organization's guidelines and to the extent permitted under state law; however I acknowledge that any and all information obtained and maintained in connection with my application is subject to the Public Record Act embodied in Tennessee Code Annotated §10-7-101 et seq.. I further release the Town of Smyrna, and its agents, assigns, and employees, from any and all claims of liability related to the acquisition and/or dissemination of information as to this background report. I understand that I will be notified in writing if an adverse decision is made based on the information contained within this report, if such report is obtained by an independent third party organization.

I understand that providing false information or failing to update the information contained within this application, including management team information, and as required by the Town of Smyrna Beer Ordinance may cause my beer permit to be suspended or revoked. I understand that the beer permits are not transferable, and if there is any change in ownership, I will have to apply for a new beer permit.

_____ 12/13/23

Signature of Applicant/Owner (or authorized corporate officer) Date

Sworn to and subscribed before me this 13 day of December, 2025.

_____

Notary Public

My Commission Expires: May - 8 - 2029

HANA HARZANI
STATE OF TENNESSEE NOTARY PUBLIC
COUNTY OF DAVIDSON
[seal]

NOTICE: A non-refundable $250.00 fee must accompany this application. If the application is approved, you are required to provide documentation of sales tax registration to the Town within

ten days of approval. Any applicant making false statement in this application shall forfeit his/her permit and shall not be eligible to receive any permit for a period of ten years.

A privilege tax of $100.00 is imposed on the business of selling, distributing, storing or manufacturing beer in this state effective January 1, 1994, and each successive January 1. Any holder of a beer permit issued after January 1, 1994 shall pay a pro rata portion of this annual tax when the permit is issued.

Town of Smyrna Use (*Do not write in shaded area*)

Initials

- □ Beer Application Form (BAF) Completed _____
  - □ Driver's License Copied
  - □ If not US Citizen, proof of right to work copied
- □ Owner Application Form Completed _____
  - □ ***Not applicable according to BAF***
  - □ Driver's License Copied
  - □ If not US Citizen, proof of right to work copied
  - **FORM NEEDED FOR ALL OWNERS LISTED
- □ Management Team Information Form Completed _____
  - □ ***Not applicable according to BAF***
  - □ Driver's License Copied
  - □ If not US Citizen, proof of right to work copied
  - **FORM NEEDED FOR ALL MANAGERS LISTED

Date Completed Application Received: _____

□ Codes Report Received □ Police Report Received

Beer Board Agenda Hearing Date: _____

Notification Sent (if any—state type and date sent):_____

Decision of Beer Board: _____ Date: _____

Bill Lee
Governor

TENNESSEE BUREAU OF INVESTIGATION
ATTN: TORIS
901 R.S. Gass Boulevard
Nashville, Tennessee 37216-2639
(615) 744-4057
Facsimile (615) 744-4289

David B. Rausch
Director

04/15/2026

MARSHA SOUTHERLAND
400 ENON SPRINGS RD EAST
SMYRNA POLICE DEPARTMENT
SMYRNA TN 37167

Tennessee Criminal History Records Request

NO TENNESSEE CRIMINAL HISTORY RECORD HAS BEEN FOUND FOR THE PERSON LISTED BELOW. NOTE: All aliases submitted have been searched.

DANIEL ALAN JORDAN

Please be aware that, unless a fingerprint comparison is performed, it is impossible for the Tennessee Bureau of Investigation to be sure the record belongs to the individual you requested . A fingerprint comparison will only be performed in the event of a written appeal of criminal history results. The information you receive will be based on only those arrests which occurred within the state of Tennessee.

The Tennessee Bureau of Investigation found no Tennessee criminal history based on the information provided. No criminal record check was conducted for other states or for the Federal Bureau of Investigation.

Tennessee Open Records Information Services
Tennessee Bureau of Investigation
901 R.S. Gass Blvd.
Nashville, TN 37216

City BBQ

BEER PERMIT APPLICATION FORM

Management Team Information

[The below information must be completed for and by each and every manager, whether full-time or part-time. Failure to provide information on managers will result in a delay of issuance of a beer permit. Failure to update manager information, including the employment of new managers, may result in suspension or revocation of a beer permit. Use additional sheets as necessary.]

1. Give the following information of any manager other than the applicant:

Name: Daniel Jordan Alan

Address: [redacted], Antioch TN 37013

Date of birth: [redacted] ✓

Place of birth: Guadalajara, Mexico

Social Security Number: [redacted]

Driver's License Number: [redacted] ✓ Expiration: 2/11/2033 ✓ State: TN

American Citizen x or Legal Resident Alien _____

2. Has the above-listed manager been convicted of any violation of the beer or alcoholic beverage laws or any crime (other than minor traffic violations) within the last ten years?
Yes _____ No x

If yes, give particulars of each charge, court, and date convicted.

3. Has the above-listed manager been convicted of any crime violating a drug or alcohol law in the State of Tennessee or any other state within the last ten (10) years?

Yes _____ No X____

If yes, give particulars of each charge, court, and date convicted.

_____

_____

4. Has the above-listed manager been convicted of any crime involving physical violence in the State of Tennessee or any other state within the last ten (10) years?

Yes _____ No X____

If yes, give particulars of each charge, court, and date convicted.

_____

_____

5. Is the above-listed manager currently facing pending charges for any criminal violation in this state or any other state?

Yes _____ No X____

If yes, give particulars of each charge, court, and date convicted.

_____

_____

VERIFICATION

STATE OF Tennessee }

}

COUNTY OF Davidson }

I, Daniel Jordan, am a manager for the applicant herein. I hereby state under oath the following:

I certify that the above information provided is true and correct. I agree to furnish information to the applicant and the Town of Smyrna if there is any change related to my answers to the questions herein. I understand that the information I have provided is subject to verification. By my signature below, I authorize and

give consent for the Town of Smyrna to perform or obtain from a third party or outside agency a background check. This includes the following:

- Criminal background records/information
- Addresses
- Social Security Verification

I, the undersigned, authorize this information to be obtained either in writing or via telephone in connection with this beer permit application. Any person, firm or organization providing information or records in accordance with this authorization is released from any and all claims of liability for compliance. Such information will be held in confidence in accordance with the organization's guidelines and to the extent permitted under state law; however I acknowledge that any and all information obtained and maintained in connection with my application is subject to the Public Records Act embodied in Tennessee Code Annotated §10-7-101 et seq. I further release the Town of Smyrna, and its agents, assigns, and employees, from any and all claims of liability related to the acquisition and/or dissemination of information as to this background report. I understand that I will be notified in writing if an adverse decision is made based on the information contained within this report, if such report is obtained by an independent third party organization.

I have read the Town of Smyrna Beer Ordinance. I am familiar with the laws of the State of Tennessee related to the sale of beer. I agree to abide by the Town of Smyrna Beer Ordinance and the laws of the State of Tennessee related to the sale of beer.

_____ 12/13/25

Signature of Manager Date

Sworn to and subscribed before me this 13 day of December, 2025.

_____

Notary Public

My Commission Expires: May-8-2029

[seal]

HANA HARZANI
STATE OF TENNESSEE NOTARY PUBLIC
COUNTY OF DAVIDSON


TENNESSEE USA
THE VOLUNTEER STATE
DRIVER LICENSE
JORDAN
DANIEL ALAN
[redacted]
ANTIOCH, TN 37013-1811
DL NO [redacted]
EXP 02/11/2033
ISS 02/11/2025
REST NONE
CLASS D
END NONE
NCIC - M. SOUTHERLAND
SMYRNA - M. SOUTHERLAND
RCSO - M. SOUTHERLAND
660923
SEX M
HGT 5'-09"
EYES BLU
DD 3052502110204326
WE HAVE NO ARREST RECORD FOR THIS PERSON IN OUR FILES
Clear ICE Status -

Save Time, Renew Online
www.Tennessee.Gov

09/23/1966
Rev 01/15/2024

CLASS: D Vehicles <26,000 (Operator)

ENDORSEMENTS: None

RESTRICTIONS: None

TN

Bill Lee
Governor

TENNESSEE BUREAU OF INVESTIGATION
ATTN: TORIS
901 R.S. Gass Boulevard
Nashville, Tennessee 37216-2639
(615) 744-4057
Facsimile (615) 744-4289

David B. Rausch
Director

04/15/2026

MARSHA SOUTHERLAND
400 ENON SPRINGS RD EAST
SMYRNA POLICE DEPARTMENT
SMYRNA TN 37167

Tennessee Criminal History Records Request

NO TENNESSEE CRIMINAL HISTORY RECORD HAS BEEN FOUND FOR THE PERSON LISTED BELOW. NOTE: All aliases submitted have been searched.

DUSTIN DON GLOVER

Please be aware that, unless a fingerprint comparison is performed, it is impossible for the Tennessee Bureau of Investigation to be sure the record belongs to the individual you requested . A fingerprint comparison will only be performed in the event of a written appeal of criminal history results. The information you receive will be based on only those arrests which occurred within the state of Tennessee.

The Tennessee Bureau of Investigation found no Tennessee criminal history based on the information provided. No criminal record check was conducted for other states or for the Federal Bureau of Investigation.

Tennessee Open Records Information Services
Tennessee Bureau of Investigation
901 R.S. Gass Blvd.
Nashville, TN 37216

City BBQ

BEER PERMIT APPLICATION FORM

Management Team Information

[The below information must be completed for and by each and every manager, whether full-time or part-time. Failure to provide information on managers will result in a delay of issuance of a beer permit. Failure to update manager information, including the employment of new managers, may result in suspension or revocation of a beer permit. Use additional sheets as necessary.]

1. Give the following information of any manager other than the applicant:

Name: Dustin Glover Don

Address: [redacted] Smyrna TN 37167

Date of birth: 10/26/1990 ✓

Place of birth: Amarillo Tx

Social Security Number: [redacted]

Driver's License Number: [redacted] ✓ Expiration: 7/7/2028 ✓ State: TN

American Citizen X or Legal Resident Alien _____

2. Has the above-listed manager been convicted of any violation of the beer or alcoholic beverage laws or any crime (other than minor traffic violations) within the last ten years?
Yes _____ No X

If yes, give particulars of each charge, court, and date convicted.

3. Has the above-listed manager been convicted of any crime violating a drug or alcohol law in the State of Tennessee or any other state within the last ten (10) years?

Yes _____ No X

If yes, give particulars of each charge, court, and date convicted.

_____

_____

4. Has the above-listed manager been convicted of any crime involving physical violence in the State of Tennessee or any other state within the last ten (10) years?

Yes _____ No X

If yes, give particulars of each charge, court, and date convicted.

_____

_____

5. Is the above-listed manager currently facing pending charges for any criminal violation in this state or any other state?

Yes _____ No X

If yes, give particulars of each charge, court, and date convicted.

_____

_____

VERIFICATION

STATE OF Tennessee }
}
COUNTY OF Rutherford }

I, Dustin Glover, am a manager for the applicant herein. I hereby state under oath the following:

I certify that the above information provided is true and correct. I agree to furnish information to the applicant and the Town of Smyrna if there is any change related to my answers to the questions herein. I understand that the information I have provided is subject to verification. By my signature below, I authorize and

give consent for the Town of Smyrna to perform or obtain from a third party or outside agency a background check. This includes the following:

- Criminal background records/information
- Addresses
- Social Security Verification

I, the undersigned, authorize this information to be obtained either in writing or via telephone in connection with this beer permit application. Any person, firm or organization providing information or records in accordance with this authorization is released from any and all claims of liability for compliance. Such information will be held in confidence in accordance with the organization's guidelines and to the extent permitted under state law; however I acknowledge that any and all information obtained and maintained in connection with my application is subject to the Public Records Act embodied in Tennessee Code Annotated §10-7-101 et seq. I further release the Town of Smyrna, and its agents, assigns, and employees, from any and all claims of liability related to the acquisition and/or dissemination of information as to this background report. I understand that I will be notified in writing if an adverse decision is made based on the information contained within this report, if such report is obtained by an independent third party organization.

I have read the Town of Smyrna Beer Ordinance. I am familiar with the laws of the State of Tennessee related to the sale of beer. I agree to abide by the Town of Smyrna Beer Ordinance and the laws of the State of Tennessee related to the sale of beer.

Signature of Manager _____ Date 5/12/26

Sworn to and subscribed before me this 12 day of April, 2026.

Notary Public _____

My Commission Expires: 05/20/2029 [seal]

CHRISTOPHER HULSHOF NOTARY STATE OF TENNESSEE PUBLIC RUTHERFORD COUNTY


DRIVER LICENSE
Tennessee
THE VOLUNTEER STATE
USA
TN
DL NO [redacted]
DOB 10/26/1990
EXP 07/07/2028
ISS 07/07/2020
CLASS D
END NONE
REST 01
SEX M HGT 6'-00" EYES BLU
[redacted]
GLOVER
DUSTIN DON
[redacted]
SMYRNA, TN 37167-6461
DL
SOUTHERLAND
WE HAVE NO
ARREST RECORD
FOR THIS PERSON
IN OUR FILES
Uvalde Police Dept Per ICE

Save Time, Renew Online
www.Tennessee.Gov

201890471178180101

10/26/1990
Rev 12/02/2011
ENDORSEMENTS:
None

CLASS: D Vehicles <26,000 (Operator)

RESTRICTIONS: 01 Glasses, Contacts

ORGAN DONOR ☐ I hereby certify that I am 18 or older, of sound mind, and upon my death, wish to make an anatomical gift noted here:

☐ Any Organ/Tissue
☐ Entire Body

Donor Signature _____ Date _____

Blood Type _____

☐ Specific Organ(s)/Tissue _____

RH Factor _____

FOR NON-PHOTO SIGN HERE: _____

AMENDED AND RESTATED
OPERATING AGREEMENT
OF
CITY BARBEQUE, LLC

This Amended and Restated Operating Agreement (together with the schedules attached hereto, this "Agreement") of City Barbeque, LLC, an Ohio limited liability company (the "Company"), is entered into by City Barbeque Holdings LLC, a Delaware limited liability company as the sole member (the "Member") of the Company. This Agreement amends and restates in its entirety, the original operating agreement of the Company, and reflects, among other things, the assignment by City Barbeque Group, Inc. of all of its membership interest in the Company to the Member and the admission of the Member to the Company. Capitalized terms used and not otherwise defined herein have the meanings set forth on Schedule A. This Agreement shall be effective as of the 31st day of May 2016.

The Company was converted from an Ohio corporation and formed as an Ohio limited liability company pursuant to and upon the execution and initial filing of the Company's Articles of Organization (the "Articles") and Certificate of Conversion (the "Certificate") with the Ohio Secretary of State pursuant to and in accordance with Chapter 1705 of the Ohio Revised Code, as amended from time to time (as amended, the "Act").

The Member hereby agrees as follows:

Section 1. Name.

The Company will carry on business under the name City Barbeque, LLC.

Section 2. Principal Business Office.

The principal business office of the Company shall be at such location as the Member determines from time to time.

Section 3. Registered Agent.

The statutory agent of the Company and the agent's address shall be as designated in the Articles. The Member shall have the right and authority to change the statutory agent when it deems it appropriate to do so by filing such instruments of record as may be required by the Act

Section 4. Member.

The Member may act by written consent.

Section 5. Certificates.

The Member or an Officer shall execute, deliver and file any other certificates (and any amendments and/or restatements thereof) necessary for the Company to qualify to do business in any state or jurisdiction in which the Company may wish to conduct business.

Section 6. Purposes.

To exercise all powers necessary or appropriate to advance, enhance, preserve or protect the Company's business, as described in and which may be legally exercised by limited liability companies under the Act.

Section 7. Powers.

Each of the Company, the Member and any Officer on behalf of the Company, (i) shall have and exercise all powers necessary, convenient or incidental to accomplish its purposes as set forth in Section 6 and (ii) shall have and exercise all of the powers and rights conferred upon limited liability companies formed pursuant to the Act.

Section 8. Management.

(a) Management. The business and affairs of the Company shall be managed by or under the direction of the Member.

(b) Powers. Subject to the terms of this Agreement, the Member shall have the full and exclusive right to manage and control the business and affairs of the Company and to make all decisions regarding the business of the Company. All documents to be signed by the Company may be executed on behalf of the Company by the Member or any Officer on behalf of the Company. Any non-Member transacting business with the Company may rely on the signature of the Member or any Officer on behalf of the Company on any document or other instrument as creating a valid and binding obligation of the Company in accordance with its terms, and such non-Member shall not be required to inquire as to the authorization of the Member.

Section 9. Officers.

(a) Officers. The initial Officers of the Company are set forth on Schedule C. The additional or successor Officers of the Company shall be chosen by the Member. Any number of offices may be held by the same person. The Member may appoint such other Officers and agents as it shall deem necessary or advisable who shall hold their offices for such terms and shall exercise such powers and perform such duties as shall be determined from time to time by the Member. The salaries of all Officers and agents of the Company shall be fixed by or in the manner prescribed by the Member. The Officers of the Company shall hold office until their successors are chosen and qualified. Any Officer may be removed at any time, with or without

cause, by the Member. Any vacancy occurring in any office of the Company shall be filled by the Member.

(b) Officers as Agents. The Officers, to the extent of their powers set forth in this Agreement or otherwise vested in them by action of the Member not inconsistent with this Agreement, are agents of the Company for the purpose of the Company's business and the actions of the Officers taken in accordance with such powers shall bind the Company.

(c) Duties of Officers. Except to the extent otherwise provided herein, each Officer shall have the duty to perform the Officer's duties in good faith, in a manner the Officer reasonably believes to be in or not opposed to the best interests of the Company, and with the care that an ordinarily prudent person in a like position would use under similar circumstances.

Section 10. Limited Liability.

Except as otherwise expressly provided by the Act, the debts, obligations and liabilities of the Company, whether arising in contract, tort or otherwise, shall be the debts, obligations and liabilities solely of the Company, and the Member shall not be obligated personally for any such debt, obligation or liability of the Company solely by reason of being a Member of the Company.

Section 11. Capital Contributions.

The Member, or its predecessors in interest, have made capital contributions to the Company.

Section 12. Additional Contributions.

The Member is not required to make any additional capital contribution to the Company. However, the Member may make additional capital contributions to the Company at any time upon the written consent of such Member. The Member shall not have any duty or obligation to any creditor of the Company to make any contribution to the Company or to issue any call for capital pursuant to this Agreement.

Section 13. Allocation of Profits and Losses.

The Company's profits and losses shall be allocated to the Member.

Section 14. Distributions.

Distributions of capital shall be made to the Member at the times and in the aggregate amounts determined by the Member. Notwithstanding any provision to the contrary contained in this Agreement, the Company shall not make a distribution of capital to the Member on account of its interest in the Company if such distribution would violate the Act or any other applicable law.

Section 15. Books and Records.

The Member shall keep or cause to be kept complete and accurate books of account and records with respect to the Company's business. The books of the Company shall at all times be maintained by the Member. The Member and its duly authorized representatives shall have the right to examine the Company books, records and documents during normal business hours. The Company's books of account shall be kept using the method of accounting determined by the Member. The Company's independent auditor, if any, shall be an independent public accounting firm selected by the Member.

Section 16. Other Business.

The Member and any Affiliate of the Member may engage in or possess an interest in other business ventures or other activities of every kind and description (including those that may be competitive with or complementary to the business of the Company), independently or with others notwithstanding any provision to the contrary at law or at equity. The Company shall not have any rights in or to such independent ventures or the income or profits therefrom by virtue of this Agreement.

Section 17. Exculpation and Indemnification.

(a) Neither the Member nor any Officer nor any employee or agent of the Company nor any employee, representative, agent or Affiliate of the Member (collectively, the "Covered Persons") shall, to the fullest extent permitted by the Act and other applicable law, be liable to the Company or any other Person, for any loss, damage or claim incurred by reason of any act or omission performed or omitted by such Covered Person in good faith on behalf of the Company and in a manner reasonably believed to be within the scope of the authority conferred on such Covered Person by this Agreement, except that this Section 17(a) shall not protect a Covered Person from liability for any such loss, damage or claim incurred by reason of such Covered Person's gross negligence, willful misconduct, fraud or criminal conduct or material breach of this Agreement.

(b) To the fullest extent permitted by the Act and other applicable law, a Covered Person shall be entitled to indemnification from the Company for any loss, damage or claim incurred by such Covered Person by reason of any act or omission performed or omitted by such Covered Person in good faith on behalf of the Company and in a manner reasonably believed to be within the scope of the authority conferred on such Covered Person by this Agreement, except that (unless otherwise approved by the Member) no Covered Person shall be entitled to be indemnified in respect of any loss, damage or claim (i) with respect to proceedings, claims or actions (1) initiated or brought voluntarily by or on behalf of such Covered Person and not by way of defense or (2) brought against such Covered Person in response to a proceeding, claim or action initiated or brought voluntarily by or on behalf of such Covered Person against the Company or its Affiliates, (ii) for any amounts paid in settlement of an action effected without the prior written consent of the Member to such settlement or (iii) to the extent such loss, damage or claim arises from such Covered Person's gross negligence, willful misconduct, fraud or

criminal conduct or material breach of this Agreement. Any indemnity under this Section 17 by the Company shall be provided out of and to the extent of Company assets only, and the Member shall not have personal liability on account thereof.

(c) To the fullest extent permitted by applicable law, expenses (including legal fees) incurred by a Covered Person defending any claim, demand, action, suit or proceeding shall, from time to time, be advanced by the Company prior to the final disposition of such claim, demand, action, suit or proceeding upon receipt by the Company of an undertaking by or on behalf of the Covered Person to repay such amount if it shall be determined that the Covered Person is not entitled to be indemnified as authorized in this Section 17.

(d) A Covered Person shall be fully protected in relying in good faith upon the records of the Company and upon such information, opinions, reports or statements presented to the Company by any Person as to matters the Covered Person reasonably believes are within such other Person's professional or expert competence and who has been selected with reasonable care by or on behalf of the Company, including information, opinions, reports or statements as to the value and amount of the assets, liabilities, or any other facts pertinent to the existence and amount of assets from which distributions to the Member might properly be paid.

(e) To the extent that, at law or in equity, a Covered Person has duties (including fiduciary duties) and liabilities relating thereto to the Company or to any other Covered Person, a Covered Person acting under this Agreement shall not be liable to the Company or to any other Covered Person for its good faith reliance on the provisions of this Agreement or any approval or authorization granted by the Company or any other Covered Person. The provisions of this Agreement, to the extent that they restrict the duties and liabilities of a Covered Person otherwise existing at law or in equity, are agreed by the Member to replace such other duties and liabilities of such Covered Person.

(f) Notwithstanding the foregoing provisions, any indemnification set forth herein shall, to the fullest extent permitted by law, not constitute a claim against the Company in the event that the Company's cash flow is insufficient to pay all its obligations to creditors.

(g) The foregoing provisions of this Section 17 shall survive any termination of this Agreement.

Section 18. Assignments.

Subject to Section 19, the Member may assign its limited liability company interest in the Company. Subject to Section 19, if the Member transfers all of its limited liability company interest in the Company pursuant to this Section 18, the transferee shall be admitted to the Company as a member of the Company upon its execution of an instrument signifying its agreement to be bound by the terms and conditions of this Agreement, which instrument may be a counterpart signature page to this Agreement. Such admission shall be deemed effective immediately prior to the transfer and, immediately following such admission, the transferor Member shall cease to be a member of the Company. Any successor to a Member by merger or consolidation shall, without further act, be the Member hereunder, and such merger or

consolidation shall not constitute an assignment for purposes of this Agreement and the Company shall continue without dissolution.

Section 19. Admission of Additional Members and Transfers of Indirect Interests.

One or more additional members of the Company may be admitted to the Company with the written consent of the Member.

Section 20. Dissolution.

(a) The Company shall be dissolved, and its affairs shall be wound up upon the first to occur of the following: (i) the termination of the legal existence of the last remaining member of the Company or the occurrence of any other event which terminates the continued membership of the last remaining member of the Company in the Company unless the Company is continued without dissolution in a manner required under this Section 20(a) or permitted by this Agreement or the Act or (ii) the entry of a decree of judicial dissolution under the Act. Upon the occurrence of any event that causes the last remaining member of the Company to cease to be a member of the Company or that causes the Member to cease to be a member of the Company (other than upon an assignment by the Member of all of its limited liability company interest in the Company and the admission of the transferee pursuant to Sections 18 and 19), to the fullest extent permitted by law, the personal representative of such member is hereby authorized to, and shall, within 90 days after the occurrence of the event that terminated the continued membership of such member in the Company, agree in writing (i) to continue the Company and (ii) to the admission of the personal representative or its nominee or designee, as the case may be, as a substitute member of the Company, effective as of the occurrence of the event that terminated the continued membership of the last remaining member of the Company or the Member in the Company.

(b) Notwithstanding any other provision of this Agreement, the Bankruptcy of the Member or any additional member shall not cause the Member or additional member, respectively, to cease to be a member of the Company and upon the occurrence of such an event, the Company shall continue without dissolution.

(c) Notwithstanding any other provision of this Agreement, each of the Member and any additional member waive any right it might have to agree in writing to dissolve the Company upon the Bankruptcy of the Member or additional member, or the occurrence of an event that causes the Member or additional member to cease to be a member of the Company.

(d) In the event of dissolution, the Company shall conduct only such activities as are necessary to wind up its affairs (including the sale of the assets of the Company in an orderly manner), and the assets of the Company shall be applied in the manner, and in the order of priority, set forth in the Act.

(e) The Company shall terminate when (i) all of the assets of the Company, after payment of or due provision for all debts, liabilities and obligations of the Company, shall have

been distributed to the Member in the manner provided for in this Agreement and (ii) the Articles shall have been canceled in the manner required by the Act.

Section 21. Waiver of Partition; Nature of Interest.

To the fullest extent permitted by law, each of the Member and any additional member admitted to the Company hereby irrevocably waives any right or power that such Person might have to cause the Company or any of its assets to be partitioned or to institute any proceeding at law or in equity to cause the dissolution, liquidation, winding up or termination of the Company. The Member shall not have any interest in any specific assets of the Company, and the Member shall not have the status of a creditor with respect to any distribution pursuant to Section 14 hereof. The interest of the Member in the Company is personal property.

Section 22. Tax Status.

It is intended that the Company shall be a disregarded entity for federal, state, and local income tax purposes.

Section 23. Benefits of Agreement; No Third-Party Rights.

None of the provisions of this Agreement shall be for the benefit of or enforceable by any creditor of the Company or by any creditor of the Member, and nothing in this Agreement shall be deemed to create any right in any Person (other than Covered Persons) not a party hereto, and this Agreement shall not be construed in any respect to be a contract in whole or in part for the benefit of any third Person (other than Covered Persons).

Section 24. Severability of Provisions.

Each provision of this Agreement shall be considered severable and if for any reason any provision or provisions herein are determined to be invalid, unenforceable or illegal under any existing or future law, such invalidity, unenforceability or illegality shall not impair the operation of or affect those portions of this Agreement which are valid, enforceable and legal.

Section 25. Entire Agreement.

This Agreement constitutes the entire agreement of the parties with respect to the subject matter hereof.

Section 26. Binding Agreement.

The Member agrees that this Agreement constitutes a legal, valid and binding agreement of the Member, and is enforceable against the Member, in accordance with its terms.

Section 27. Governing Law.

This Agreement shall be governed by and construed under the laws of the State of Ohio (without regard to conflict of laws principles), all rights and remedies being governed by said laws.

Section 28. Amendments.

This Agreement may be modified, altered, supplemented or amended pursuant to a written agreement executed and delivered by the Member.

Section 29. Notices.

Any notices required to be delivered hereunder shall be in writing and personally delivered, mailed or sent by telecopy, electronic mail or other similar form of rapid transmission, and shall be deemed to have been duly given upon receipt (a) in the case of the Company, to the Company at its address in Section 2, (b) in the case of the Member, to the Member at its address as listed on Schedule B attached hereto and (c) in the case of either of the foregoing, at such other address as may be designated by written notice to the other party.

[Signature Page Follows]

IN WITNESS WHEREOF, the undersigned, intending to be legally bound hereby, has duly executed this Operating Agreement as of the date set forth above.

MEMBER:

City Barbeque Holdings LLC,
a Delaware limited liability company

By: _____
Name: Richard Malir
Title: President

SCHEDULE A

Definitions

A. Definitions

When used in this Agreement, the following terms not otherwise defined herein have the following meanings:

"Act" has the meaning set forth in the preamble to this Agreement.

"Affiliate" means, with respect to any Person, any other Person directly or indirectly Controlling or Controlled by or under direct or indirect common Control with such Person.

"Agreement" means this Operating Agreement of the Company, together with the schedules attached hereto, as amended, restated or supplemented or otherwise modified from time to time.

"Bankruptcy" means, with respect to any Person, if such Person (i) makes an assignment for the benefit of creditors, (ii) files a voluntary petition in bankruptcy, (iii) is adjudged a bankrupt or insolvent, or has entered against it an order for relief, in any bankruptcy or insolvency proceedings, (iv) files a petition or answer seeking for itself any reorganization, arrangement, composition, readjustment, liquidation or similar relief under any statute, law or regulation, (v) files an answer or other pleading admitting or failing to contest the material allegations of a petition filed against it in any proceeding of this nature, (vi) seeks, consents to or acquiesces in the appointment of a trustee, receiver or liquidator of the Person or of all or any substantial part of its properties, or (vii) if 120 days after the commencement of any proceeding against the Person seeking reorganization, arrangement, composition, readjustment, liquidation or similar relief under any statute, law or regulation, if the proceeding has not been dismissed, or if within 90 days after the appointment without such Person's consent or acquiescence of a trustee, receiver or liquidator of such Person or of all or any substantial part of its properties, the appointment is not vacated or stayed, or within 90 days after the expiration of any such stay, the appointment is not vacated.

"Articles" has the meaning set forth in the introduction to this Agreement.

"Company" means City Barbeque, LLC an Ohio limited liability company.

"Control" means the possession, directly or indirectly, of the power to direct or cause the direction of the management or policies of a Person, whether through the ownership of voting securities or general partnership or managing member interests, by contract or otherwise. "Controlling" and "Controlled" shall have correlative meanings. Without limiting the generality of the foregoing, a Person shall be deemed to Control any other Person in which it owns, directly or indirectly, at least 51% of the ownership interests.

"Covered Persons" has the meaning set forth in Section 17(a).

"Member" means City Barbeque Holdings LLC, as the initial member of the Company, and includes any Person admitted as an additional member of the Company or a substitute member of the Company pursuant to the provisions of this Agreement, each in its capacity as a member of the Company.

"Officer" means an officer of the Company described in Section 9.

"Person" means any individual, corporation, partnership, joint venture, limited liability company, limited liability partnership, association, joint stock company, trust, unincorporated organization, or other organization, whether or not a legal entity, and any governmental authority.

B. Rules of Construction

Definitions in this Agreement apply equally to both the singular and plural forms of the defined terms. The words "include" and "including" shall be deemed to be followed by the phrase "without limitation." The terms "herein," "hereof" and "hereunder" and other words of similar import refer to this Agreement as a whole and not to any particular Section, paragraph or subdivision. The Section titles appear as a matter of convenience only and shall not affect the interpretation of this Agreement. All Section, paragraph, clause, Exhibit or Schedule references not attributed to a particular document shall be references to such parts of this Agreement.

SCHEDULE B

Member

Name	Mailing Address	Membership Interest
City Barbeque Holdings LLC	6175 Emerald Parkway Dublin, Ohio 43016	100%

SCHEDULE C

Officers

President – Richard E. Malir
Chief Financial Officer and Treasurer – David Conley
Vice President – John Kean
Secretary – James Budros

SHAREABLES

★ **PITMASTER NACHOS** 1220 cal *NEW!* 9.99
Pulled pork, Blue Ribbon Queso, chipotle ranch, Original BBQ sauce, Swine Wine pico, pickled red onions

FRIED PICKLE CHIPS 700 cal 7.99

BUFFALO CHICKEN DIP 910 cal *NEW!* 8.99
Smoked chicken, queso, Frank's RedHot® & chips

CHEESY BACON FRIES 1610 cal 8.99
Basket of fresh-cut fries loaded with bacon and queso

SMOKED & FRIED WINGS 1140-3420 cal
With house made ranch & Frank's RedHot®
6pc 8.99
12pc 16.99
18pc 24.99

SALADS

Ranch, LT Italian, Chipotle Ranch, Honey Mustard

★ **COMPETITION COBB** 410 cal *NEW!* 10.99
Greens, turkey, double-smoked bacon, pickled red onions, tomatoes, hardboiled egg

SMOKEHOUSE CLASSIC 400-600 cal 9.99
Greens, cucumbers, tomatoes, red onions, parmesan, choice of Smoked Signature meat
WITH BRISKET, HAND-BREADED OR SMOKED CHICKEN + 3

★ *CITY FAVORITE*

2000 calories a day is used for general nutrition advice, but calorie needs may vary. Additional nutrition information is available upon request.

SANDWICHES

CITY CLASSICS naked or on a toasted bun

HAND-PULLED PORK 550 cal 8.49

TURKEY BREAST 360 cal 8.49

'BAMA PULLED CHICKEN 490 cal 8.49

SMOKEHOUSE SPECIALS

★ **LOLO'S PULLED PORK** 670 cal 8.99
Pulled pork, Swine Wine, creamy slaw

TEXAS-STYLE SAUSAGE 620 cal 6.99
Beef and pork sausage, creamy slaw, Texas toast

NASHVILLE HOT CHICKEN 600 cal 8.99
Spicy hand-breaded crispy chicken, creamy slaw, Nashville Hot mayo, pickles

THE ONE THAT STARTED IT ALL

★ **18-HOUR BEEF BRISKET** 590 cal 11.49
Winner of the Kansas City Royal, smoked 18 hours

DIRTY BIRD 960 cal *NEW!* 9.69
Hand-breaded crispy chicken, honey glaze, bacon, crispy onions, chipotle ranch, pickles

★ **NOT A SLOPPY JOE** 540 cal *NEW!* 9.29
Pulled pork, pulled ribs & brisket in spicy-sweet Chipotle Peach BBQ sauce, crispy onions, pickles

MORE COWBELL 880 cal 11.49
Beef brisket, provolone, sautéed peppers & onions, horseradish sauce, crispy onions, Texas toast

MAKE IT A CITY MEAL — *1 SIDE & DRINK* +4.99 — *2 SIDES & DRINK* +6.99

• BOWLS •

FRANK'S REDHOT® CRISPY CHICKEN MAC BOWL 10.49
Baked mac and cheese, hand-battered tenders, Frank's RedHot®



MEATS

SMOKED SIGNATURES by the ½ pound

HAND-PULLED PORK 520 cal 9.49

★ **18-HOUR BRISKET** 500 cal 14.49

'BAMA PULLED CHICKEN 440 cal 9.49

SMOKED SAUSAGE 620 cal 8.99

TURKEY BREAST 280 cal 9.49

RIBS

★ **ST. LOUIS RIBS** 110/660/1320 cal
by the bone 2.99
half slab 17.99
full slab 29.99

CHICKEN

HALF BIRD 990 cal 12.99

BREAST & WING 520 cal 9.99

LEG & THIGH 410 cal 7.99

HAND-BREADED TENDERS 680 cal (4 pc) 9.99

SAMPLERS with Texas toast

★ 2 MEATS, 2 SIDES 790–1990 cal 15.99

3 MEATS, 2 SIDES 965–2765 cal *NEW!* 19.99

choose from Smoked Signature meats
WITH BRISKET +3 EACH

CITY SAMPLER 1455–2160 cal 25.99
Beef brisket, pulled pork, sausage, turkey, two sides

★ **JUDGE'S SAMPLER** 39.99
Brisket, pulled pork, half slab ribs, choice of breast & wing or leg & thigh, Texas toast, two sides

FAMILY PACK 3505–5425 cal 29.99
One pound Smoked Signature meat, buns, two pint sides, cornbread
WITH BRISKET +9.99

KID'S PLATE 105–800 cal 5.99
Small sandwich or chicken tenders, kid's side, drink
WITH BRISKET +2



DRINKS

SODA, TEA & LEMONADE 0–440 cal 2.99

CRAFT BOTTLED SODA 60–170 cal 3.49

ASK ABOUT OUR BEER SELECTION

SWEETS

★ **BANANA PUDDING** 310 cal 4.99

COBBLER 1160 cal 4.99

CHOCOLATE CAKE 1160 cal 4.99

SIDES

SIDE	PINT	QUART
3.19	8.99	12.99

3 SIDES PLATE 8.49

HOT

- MAC & CHEESE 310 cal
- FRESH-CUT FRIES 370 cal
- BAKED BEANS W/BRISKET 250 cal
- GREEN BEANS W/BACON 90 cal
- CORNBREAD 360 cal
- HUSH PUPPIES 290 cal
- CORN PUDDING 380 cal

COLD

- CREAMY SLAW 340 cal
- POTATO SALAD 450 cal
- SIDE SALAD 35 cal

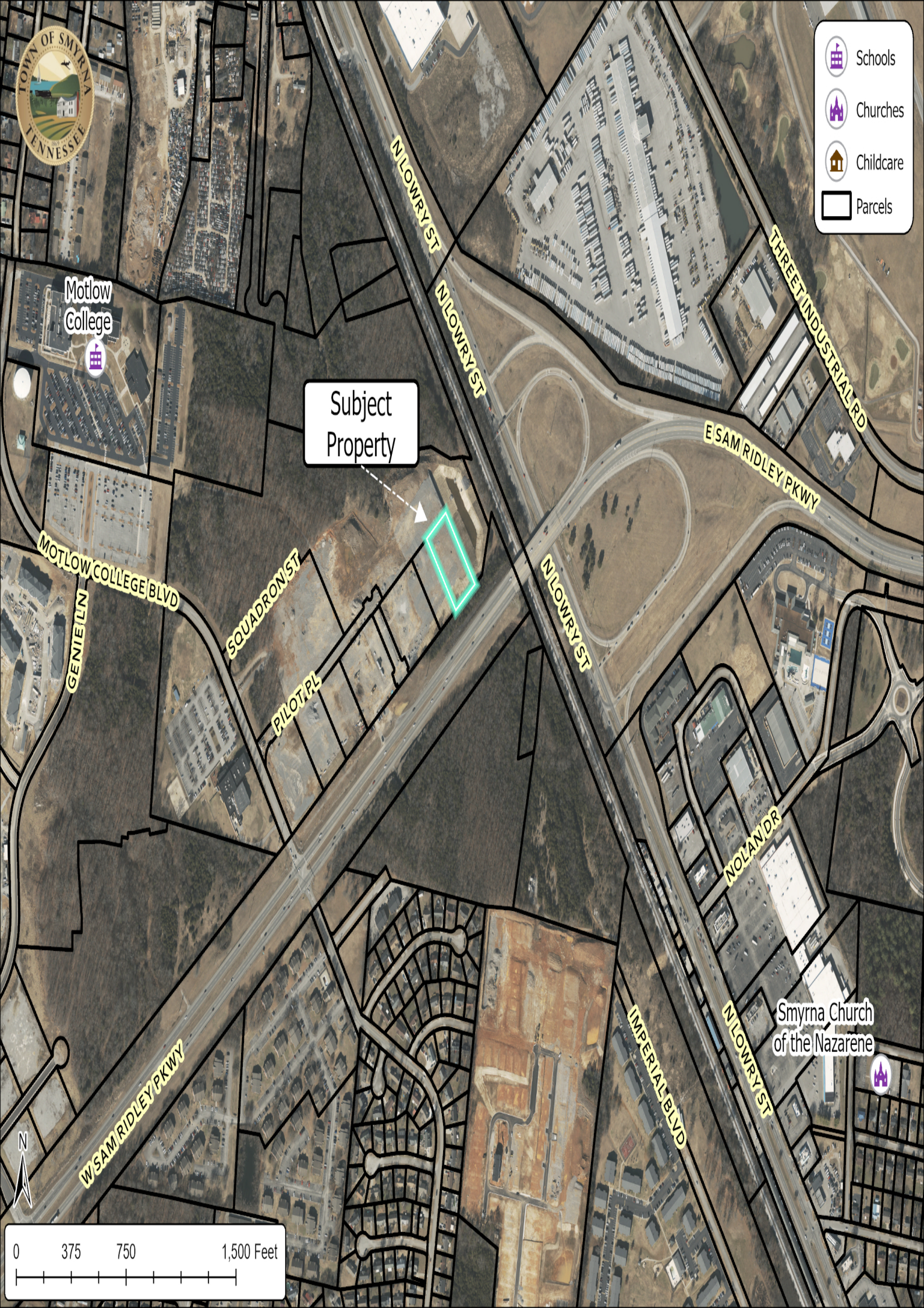
Schools
Churches
Childcare
Parcels
Motlow College
Subject Property
N LOWRY ST
N LOWRY ST
THREET INDUSTRIAL RD
E SAM RIDLEY PKWY
MOTLOW COLLEGE BLVD
GENIE LN
SQUADRON ST
PILOT PL
N LOWRY ST
NOLAN DR
IMPERIAL BLVD
N LOWRY ST
Smyrna Church of the Nazarene
W SAM RIDLEY PKWY
N
0
375
750
1,500 Feet

Jason Irvin, Chief of Police

Smyrna Police Department

400 Enon Springs Road East, Smyrna, Tennessee 37167

June 12, 2026

To whom it may concern,

We are not showing an arrest record for Joshua Gray Gaither, date of birth 4/26/1983.

Sincerely,

Jason Irvin
Chief of Police

JI/ms

DISPATCH: (615) 459-6644
RECORDS: (615) 355-5731
DETECTIVES: (615)355-7530

FAX: (615) 459-9751
ADMINISTRATION: (615) 355-5705
CID FAX: (615) 355-5712

Bill Lee
Governor

TENNESSEE BUREAU OF INVESTIGATION
ATTN: TORIS
901 R.S. Gass Boulevard
Nashville, Tennessee 37216-2639
(615) 744-4057
Facsimile (615) 744-4289

David B. Rausch
Director

06/09/2026

ANDY BUQUET
2620 ELM HLL PIKE
NASHVILLE TN 37214

Tennessee Criminal History Records Request

NO TENNESSEE CRIMINAL HISTORY RECORD HAS BEEN FOUND FOR THE PERSON LISTED BELOW. NOTE: All aliases submitted have been searched.

JOSHUA GRAY GAITHER

Please be aware that, unless a fingerprint comparison is performed, it is impossible for the Tennessee Bureau of Investigation to be sure the record belongs to the individual you requested . A fingerprint comparison will only be performed in the event of a written appeal of criminal history results. The information you receive will be based on only those arrests which occurred within the state of Tennessee.

The Tennessee Bureau of Investigation found no Tennessee criminal history based on the information provided. No criminal record check was conducted for other states or for the Federal Bureau of Investigation.

Tennessee Open Records Information Services
Tennessee Bureau of Investigation
901 R.S. Gass Blvd.
Nashville, TN 37216

BEER PERMIT APPLICATION FORM
OFF-PREMISE
Town of Smyrna, Tennessee

PLEASE COMPLETE THE BELOW BEER PERMIT APPLICATION FORM IN ITS ENTIRETY. IF A QUESTION DOES NOT APPLY TO YOU, PLEASE INDICATE BY MARKING YOUR ANSWER AS "Not Applicable" OR "N/A". THE BEER PERMIT APPLICATION WILL NOT BE PLACED ON THE BEER BOARD AGENDA UNTIL THE APPLICATION FORM IS COMPLETE.

THIS IS AN APPLICATION FOR:

☑ OFF-PREMISE CONSUMPTION PERMIT

I HEREBY MAKE APPLICATION FOR A PERMIT TO SELL, STORE, MANUFACTURE, OR DISTRIBUTE BEER OR OTHER BEVERAGES AUTHORIZED TO BE SOLD, STORED, MANUFACTURED OR DISTRIBUTED UNDER THE PROVISION OF *TENNESSEE CODE ANNOTATED (TCA)* § 57-5-101 ET SEQ. AND THE PROVISIONS IN TITLE 8 OF THE MUNICIPAL CODE OF THE TOWN OF SMYRNA, TENNESSEE, AND I BASE MY APPLICATION UPON THE ANSWERS TO THE FOLLOWING QUESTIONS.

Joshua Gray Gaither

1. Full Name of Applicant (Owner): Kroger Limited Partnership I

   Person___ Partnership✓ Corporation___ Limited Liability Co.___ Association___

2. **All individuals, partnerships, corporations, or associations having at least a 5% ownership interest in the business must complete a separate Beer Permit Owner Application Form. (Individuals having at least a 5% ownership interest in the business must be at least 21 years of age.)**

   The Kroger Co. - Limited Partner 99%

   KRGP LLC - General Partner 1%

   Joshua Gaither - Manager- Owns 0% of either The Kroger Co, of KRGP LLC

3. What is your present home address?

[redacted] Murfreesboro, TN 37128

4. What were your previous home addresses within the last ten years?

[redacted] Murfreesboro Tn 37128

[redacted] Murfreesboro Tn 37128

5. Date of birth of applicant: [redacted] ✓

Place of birth: Clarksville Tn

Social Security Number: [redacted]

Driver's License Number: [redacted] ✓ Expiration: 08/09/2026 ✓ State: TN

American Citizen ✓ or Legal Resident Alien _____

6. Home telephone number: [redacted]

7. Business telephone number: 615-217-2752

8. Email address: joshua.gaither@stores.kroger.com

9. Under what name will this business operate? Kroger # 555
[Permits shall be issued in the applicant's name with a dba designation.]

State the proposed name in which the Beer Permit shall be issued:

Kroger Limited Partnership I DBA Kroger # 555

10. What is the purpose and intended use of the Beer Permit?

This permit will be for a grocery store in which will sell beer and malt beverage products for off-premise consumption

If yes, please state the date the charge was initiated, the nature of the charge the individual is currently facing, and the status of the pending charge.

N/A

17. Has this owner or the owners of the organization ever had a beer permit revoked, suspended, or denied in the State of Tennessee?

Yes ____ No ✓

If yes, specify where, when and why.

N/A

18. Give the name, **relationship to applicant** (if applicable) and address of the former beer permittee at this location.

Not applicable, location will be a new build

IT IS THE RESPONSIBILTY OF THE APPLICANT TO READ THE TOWN OF SMYRNA'S ADOPTED ORDINANCE AS PERTAINING TO DISTANCES OF ANY SCHOOL, CHURCH, FUNERAL HOME, HOSPITAL, LICENSED DAY CARE FACILITY, OR OTHER PLACE OF PUBLIC GATHERING AS IT RELATES TO THE SALE, STORAGE, AND MANUFACTURE OF BEER AND LIKE BEVERAGES.

19. What is the name and address of the church or other place of worship nearest to your business?

All Saints Episcopal Church 1401 Lee Victory Parkway Smyrna, TN 37167

20. What is the name and address of the school nearest to your business?

Smyrna High School 100 Bulldog Drive Smyrna, TN 37167

21. What is the name and address of the owner of the nearest funeral home to your business?

Woodin Funeral Home 203 N. Lowery Smyrna, TN 37167

22. What is the name and address of the owner of the nearest hospital to your business?

Stone Crest Medical Center 200 Stone Crest Blvd. Smyrna, TN 37167

23. What is the name and address of the owner of the nearest day care facility to your business?

Le Petite Academy of Smyrna 1212 Hazelwood Dr. Smyrna, TN 37167

NO PERMIT SHALL BE ISSUED TO SELL BEER OR OTHER BEVERAGE COMING WITHIN THE PROVISIONS OF THIS CHAPTER IN VIOLATION OF ANY PROVISION OF STATE LAW, OR WHERE SUCH SALE WILL CAUSE CONGESTION OF TRAFFIC OR WILL INTERFERE WITH SCHOOLS, CHURCHES, OR OTHER PLACES OF PUBLIC GATHERING, OR WILL OTHERWISE INTERFERE WITH THE PUBLIC HEALTH, SAFETY, OR MORALS. ***(Smyrna Municipal Code Section 8-214)***

VERIFICATION

STATE OF TENNNESSEE }

}

COUNTY OF DAVIDSON }

I, [signature] Josh Gaither, applicant herein, hereby state under oath the following:

I hereby certify that no person having at least a 5% ownership interest, nor any person to be employed in the distribution or sale of beer in my establishment, has been convicted of any violation of the beer or alcoholic beverage laws, convicted of any crime violating any drug or alcohol law, convicted of a crime involving

required by the Town of Smyrna Beer Ordinance may cause my beer permit to be suspended or revoked. I understand that the beer permits are not transferable, and if there is any change in ownership, I will have to apply for a new beer permit.

Signature of Applicant/Owner (or authorized corporate officer) — Date: 06/05/2026

Sworn to and subscribed before me this 5th day of June 2026.

Notary Public

My Commission Expires: 6/27/2027

ANDY N. BUQUET
STATE OF TENNESSEE NOTARY PUBLIC
COUNTY OF RUTHERFORD
[seal]
My Commission Expires June 27, 2027

NOTICE: A non-refundable $250.00 fee must accompany this application. If the application is approved, you are required to provide documentation of sales tax registration to the Town within ten days of approval. Any applicant making false statement in this application shall forfeit his/her permit and shall not be eligible to receive any permit for a period of ten years.

A privilege tax of $100.00 is imposed on the business of selling, distributing, storing or manufacturing beer in this state effective January 1, 1994, and each successive January 1. Any holder of a beer permit issued after January 1, 1994 shall pay a pro rata portion of this annual tax when the permit is issued.

Town of Smyrna Use *(Do not write in shaded area)*

Initials

- ☐ Beer Application Form (BAF) Completed
  - ☐ Driver's License Copied
  - ☐ If not US Citizen, proof of right to work copied
- ☐ Owner Application Form Completed
  - ☐ *Not applicable according to BAF*
  - ☐ Driver's License Copied
  - ☐ If not US Citizen, proof of right to work copied
  - **FORM NEEDED FOR ALL OWNERS LISTED
- ☐ Management Team Information Form Completed
  - ☐ *Not applicable according to BAF*
  - ☐ Driver's License Copied
  - ☐ If not US Citizen, proof of right to work copied
  - **FORM NEEDED FOR ALL MANAGERS LISTED

Date Completed Application Received: _____

☐ Codes Report Received ☐ Police Report Received

Beer Board Agenda Hearing Date: _____

Notification Sent (if any – state type and date sent): _____

Decision of Beer Board: _____ Date: _____

physical violence, or any crime involving moral turpitude within the past ten years.

I further agree to update information related to ownership and management as ownership and management change.

I am also aware that I shall not be issued a permit or my permit shall be revoked, if my business location causes traffic congestion or interferes with schools, churches or other places of public gathering, or otherwise interferes with public health, safety and morals.

I also certify that I have received a copy of the Town of Smyrna Beer Ordinance and the By-Laws and Rules of Procedure of the Smyrna Beer Board of Rutherford County, Tennessee. I state that I have read and understand the Beer Ordinance and the By-Laws. I further state that I am familiar with and understand the laws of the State of Tennessee related to the sale of beer. I further agree to abide by the Town of Smyrna Beer Ordinance and the laws of the State of Tennessee related to the sale of beer.

I further state that the information provided herein is true and correct. I understand that the information I have provided is subject to verification. By my signature below, I authorize and give consent for the Town of Smyrna to perform or obtain from a third party or outside agency a background check. This includes the following:

- Criminal background records/information
- Addresses
- Social Security Verification

I, the undersigned, authorize this information to be obtained either in writing or via telephone in connection with this beer permit application. Any person, firm or organization providing information or records in accordance with this authorization is released from any and all claims of liability for compliance. Such information will be held in confidence in accordance with the organization's guidelines and to the extent permitted under state law; however I acknowledge that any and all information obtained and maintained in connection with my application is subject to the Public Record Act embodied in Tennessee Code Annotated §10-7-101 et seq.. I further release the Town of Smyrna, and its agents, assigns, and employees, from any and all claims of liability related to the acquisition and/or dissemination of information as to this background report. I understand that I will be notified in writing if an adverse decision is made based on the information contained within this report, if such report is obtained by an independent third party organization.

I understand that providing false information or failing to update the information contained within this application, including management team information, and as

11. Location of business by street address or other geographical description:

500 Bulldog Drive Smyrna, TN 37167

Phone number of business: Not yet assigned

12. Specify the identity and address of the person responsible to receive annual privilege tax notices and any other correspondence.

Kroger Business License Dept.

PO Box 305103

Nashville, TN 37230-5103

13. Give the name and address of the property owner, if different from the business owner.

SEK Smyrna, LLC

2742 Perimeter Pkwy, Bldg. 100 Suite 370 Augusta, GA 30909

14. How many managers are currently employed? 1
Please state the full name of each manager currently employed.

Joshua Gaither

How many managers do you anticipate hiring? 2

[Management Team Information must be completed and submitted to the Town of Smyrna at the time application. A Management Team Information form must be completed for any managers who are hired and/or promoted after the granting of a beer permit within five (5) days of hiring. Failure to supply such information or update provided information may result in the revocation or suspension of a beer permit.]

15. Provide the following as applicable: ***Article of Incorporation, Partnership Agreement, or L.L.C. Operating Agreement;*** specifically the percent of ownership (private info may be redacted) *PLEASE ATTACH*

16. Has any person having at least a 5% ownership interest or any other employee of the business been convicted of any violation of the beer or alcoholic beverage laws or any crime (other than minor traffic violations) in the State of Tennessee or any other state within the last ten (10) years?

Yes _____ No ✓

If yes, give particulars of each charge, court, and date convicted.

N/A

Has any person having at least a 5% ownership interest or any other employee of the business been convicted of any crime violating a drug or alcohol law in the State of Tennessee or any other state within the last ten (10) years ?

Yes _____ No ✓

If yes, give particulars of each charge, court, and date convicted.

N/A

Has any person having at least a 5% ownership interest or any other employee of the business been convicted of any crime involving physical violence in the State of Tennessee or any other state within the last ten (10) years?

Yes _____ No ✓

If yes, give particulars of each charge, court, and date convicted.

N/A

Is any person having at least a 5% ownership interest or any other employee of the business currently facing pending criminal charges?

Yes _____ No ✓

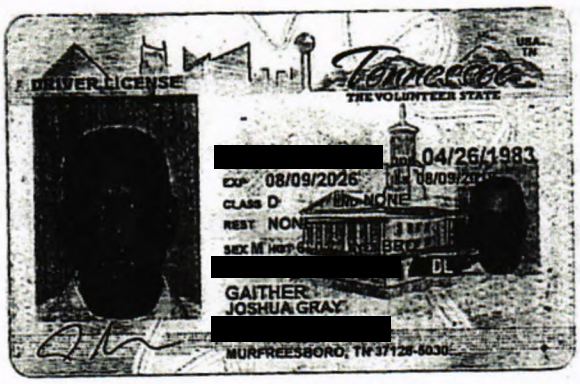

NCIC - M. SOUTHERLAND
SMYRNA - M. SOUTHERLAND
RCSO - M. SOUTHERLAND

Clear ICE Status.

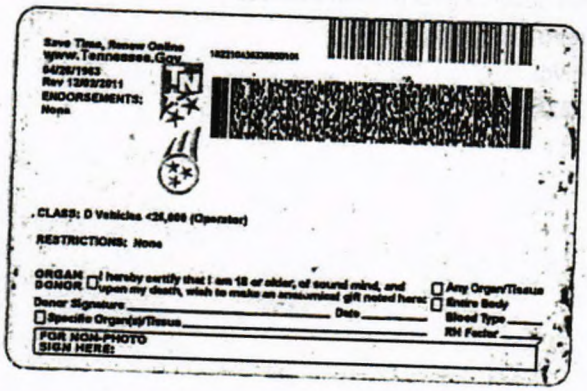

DOC ID ----> 6030_1087

06030-1088

The State of Ohio

Bob Taft

Secretary of State

994071

Certificate

It is hereby certified that the Secretary of State of Ohio has custody of the Records of Incorporation and Miscellaneous Filings; that said records show the filing and recording of: CLP

of:

KROGER LIMITED PARTNERSHIP I

United States of America
State of Ohio
Office of the Secretary of State

Recorded on Roll 6030 at Frame 1089 of
the Records of Incorporation and Miscellaneous Filings.

Witness my hand and the seal of the Secretary of State at Columbus, Ohio, this 9TH **day of** OCT ,

A.D. 19 97 .

Bob Taft

Bob Taft
Secretary of State

DOC ID ----> 6030_1087

06030-1089

Prescribed by
Bob Taft, Secretary of State
30 East Broad Street, 14th Floor
Columbus, Ohio 43266-0418
Form CLP (July 1994)

Approved JK
Date 10/9/97
Fee $85*
97100916501

CERTIFICATE OF LIMITED PARTNERSHIP

The undersigned, desiring to form a limited partnership in accordance with Ohio Revised Code Chapter 1782, do hereby certify as follows:

1. The name of the limited partnership shall be Kroger Limited Partnership I
(see instruction #1 regarding name)

2. The address of the principal place of business of the partnership shall be:

1014 Vine Street
(street and number)

Cincinnati	Ohio	45202
(city, village or township)	(state)	(zip code)

3. The name and address of the limited partnership's agent for service of process in Ohio is:

Paul W. Heldman	1014 Vine Street	
(name of agent)	(street and number)	
Cincinnati		45202
(city, village or township)		(zip code)

4. The name and business or residence address of each **GENERAL PARTNER** is:

Name	Address
KRGP Inc.	1014 Vine Street, Cincinnati, Ohio 45202

(If insufficient space to cover this item, please attach additional sheet)

06030-1090

5. The undersigned hereby certify that this limited partnership has been in existence since N/A (date of filing with county recorder's office), and that this certificate is being filed solely to comply with Ohio Revised Code Section 1782.63(A)(1).

The foregoing item 5 is to be completed, and is applicable ONLY IF the subject limited partnership was in existence prior to July 1, 1994. If not applicable, please insert "N/A" in the blank designated for the pre-existing date.

6. Other provisions (optional):

The formation of the limited partnership shall be effective on November 29, 1997, at 12:01 A.M.

(If insufficient space for additional provisions, please attach a separate sheet)

IN WITNESS WHEREOF, the undersigned have caused this Certificate to be executed this 3rd day of October, 1997.

KRGP Inc.

By: Paul Heldman

Paul W. Heldman
Vice President and Secretary

(If insufficient space for all signatures, please attach a separate sheet containing additional signatures)

INSTRUCTIONS

1. Pursuant to ORC 1782.02, the name of the limited partnership must include the words "Limited Partnership", "L.P.", "Limited", or "Ltd.", and shall NOT contain the name of a limited partner unless either of the following are true:
   a. It is also the name of a general partner;
   b. the business of the limited partnership had been carried on under that name before the admission of that limited partner.

2. Pursuant to ORC 1782.01(H), a limited partnership must be created by a minimum of two persons. The certificate must be signed by all General Partners.

3. *If this certificate of limited partnership is being filed solely to comply with the provisions of Ohio Revised Code Section 1782.63(A)(1), then no filing fee is required.

[Ohio Revised Code Section 1782.08]

UNITED STATES OF AMERICA
STATE OF OHIO
OFFICE OF THE SECRETARY OF STATE

I, Frank LaRose, do hereby certify that I am the duly elected, qualified and present acting Secretary of State for the State of Ohio, and as such have custody of the records of Ohio and Foreign business entities; that said records show KROGER LIMITED PARTNERSHIP I, an Ohio Limited Partnership, Registration Number 994071, filed on October 9, 1997, is currently in FULL FORCE AND EFFECT upon the records of this office.

Witness my hand and the seal of the Secretary of State at Columbus, Ohio this 8th day of June, A.D. 2026.

Ohio Secretary of State

Validation Number: 202615903906

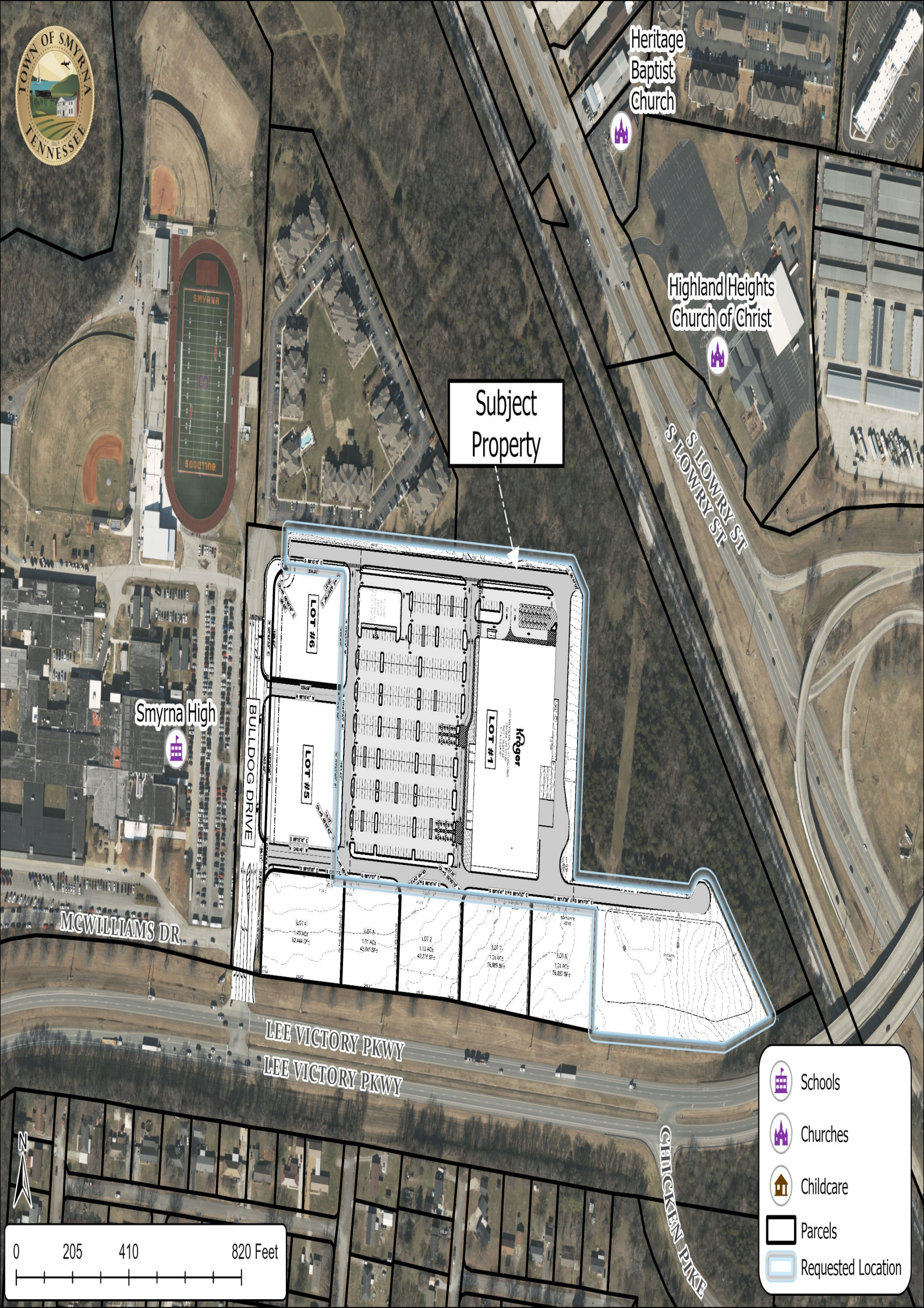
Heritage Baptist Church
Highland Heights Church of Christ
Subject Property
S LOWRY ST
S LOWRY ST
LOT #6
LOT #5
LOT #1
Kroger
BULLDOG DRIVE
Smyrna High
MCWILLIAMS DR
LEE VICTORY PKWY
LEE VICTORY PKWY
CHICKEN PIKE
N
0
205
410
820 Feet
Schools
Churches
Childcare
Parcels
Requested Location

Jason Irvin, Chief of Police

Smyrna Police Department

400 Enon Springs Road East, Smyrna, Tennessee 37167

July 13, 2026

To whom it may concern,

We are not showing an arrest record for Mason Ross Revelette, date of birth 12/15/1986.

We are not showing an arrest record for Ashlea Nicole Lackey, date of birth 3/19/2000.

We are not showing an arrest record for Marsella Emelinda Ramirez James, date of birth 2/7/1979.

Sincerely,

Jason Irvin
Chief of Police

JI/ms

DISPATCH: (615) 459-6644
RECORDS: (615) 355-5731
DETECTIVES: (615)355-7530
FAX: (615) 459-9751
ADMINISTRATION: (615) 355-5705
CID FAX: (615) 355-5712

Bill Lee
Governor

TENNESSEE BUREAU OF INVESTIGATION
ATTN: TORIS
901 R.S. Gass Boulevard
Nashville, Tennessee 37216-2639
(615) 744-4057
Facsimile (615) 744-4289

David B. Rausch
Director

07/13/2026

MARSHA SOUTHERLAND
400 ENON SPRINGS RD EAST
SMYRNA POLICE DEPARTMENT
SMYRNA TN 37167

Tennessee Criminal History Records Request

NO TENNESSEE CRIMINAL HISTORY RECORD HAS BEEN FOUND FOR THE PERSON LISTED BELOW. NOTE: All aliases submitted have been searched.

MASON ROSS REVELETTE

Please be aware that, unless a fingerprint comparison is performed, it is impossible for the Tennessee Bureau of Investigation to be sure the record belongs to the individual you requested . A fingerprint comparison will only be performed in the event of a written appeal of criminal history results. The information you receive will be based on only those arrests which occurred within the state of Tennessee.

The Tennessee Bureau of Investigation found no Tennessee criminal history based on the information provided. No criminal record check was conducted for other states or for the Federal Bureau of Investigation.

Tennessee Open Records Information Services
Tennessee Bureau of Investigation
901 R.S. Gass Blvd.
Nashville, TN 37216

BEER PERMIT APPLICATION FORM
ON-PREMISE
Town of Smyrna, Tennessee

PLEASE COMPLETE THE BELOW BEER PERMIT APPLICATION FORM IN ITS ENTIRETY. IF A QUESTION DOES NOT APPLY TO YOU, PLEASE INDICATE BY MARKING YOUR ANSWER AS "Not Applicable" OR "N/A". THE BEER PERMIT APPLICATION WILL NOT BE PLACED ON THE BEER BOARD AGENDA UNTIL THE APPLICATION FORM IS COMPLETE.

THIS IS AN APPLICATION FOR:

☒ ON-PREMISE CONSUMPTION PERMIT

I HEREBY MAKE APPLICATION FOR A PERMIT TO SELL, STORE, MANUFACTURE, OR DISTRIBUTE BEER OR OTHER BEVERAGES AUTHORIZED TO BE SOLD, STORED, MANUFACTURED OR DISTRIBUTED UNDER THE PROVISION OF *TENNESSEE CODE ANNOTATED (TCA)* § 57-5-101 ET SEQ. AND THE PROVISIONS IN TITLE 8 OF THE MUNICIPAL CODE OF THE TOWN OF SMYRNA, TENNESSEE, AND I BASE MY APPLICATION UPON THE ANSWERS TO THE FOLLOWING QUESTIONS.

Mason Ross Revelette (owner)

1. Full Name of Applicant (Owner): Jonathan's Grille - Smyrna, LLC

   Person___ Partnership___ Corporation___ Limited Liability Co. X Association___

2. **All individuals, partnerships, corporations, or associations having at least a 5% ownership interest in the business must complete a separate Beer Permit Owner Application Form. (Individuals having at least a 5% ownership interest in the business must be at least 21 years of age.)**

   100% owned by Jonathan's Grille Holdco, LLC. See Beer Permit owner Application Form

Answers for questions 3-8 below are for Mason Revelette, Chief Manager of Jonathan's Grille Holdco, LLC

3. What is your present home address?

[redacted] Brentwood, TN 37027

4. What were your previous home addresses within the last ten years?

[redacted] Nashville, TN 37203; [redacted] shville, TN 37210

, Nashville, TN 37203 [redacted] Nashville, TN 37203

[redacted] shville, TN 37201

5. Date of birth of applicant: [redacted] ✓

Place of birth: Brentwood, TN

Social Security Number: [redacted]

Driver's License Number: [redacted] ✓ Expiration: 9/5/2032 ✓ State: TN

American Citizen Yes or Legal Resident Alien _____

6. Home telephone number: [redacted]

7. Business telephone number: N/A

8. Email address: mason@jonathansgrille.com

9. Under what name will this business operate? Jonathan's Grille - Smyrna, LLC d/b/a Jonathan's Grille
[Permits shall be issued in the applicant's name with a dba designation.]

State the proposed name in which the Beer Permit shall be issued:

Jonathan's Grille - Smyrna, LLC d/b/a Jonathan's Grille

10. What is the purpose and intended use of the Beer Permit?

Operate a full-service restaurant.

11. Location of business by street address or other geographical description:

160 W Sam Ridley Parkway
Smyrna, TN 37167

Phone number of business: N/A (building under construction, will provide phone when installed)
Corporate office: (615) 814-2898

12. Specify the identity and address of the person responsible to receive annual privilege tax notices and any other correspondence.

Michael Atnip. 3325 Aspen Grove Dr STE 201, Franklin, TN 37067. (615) 807-7870. michael@milesatnip.com

13. Give the name and address of the property owner, if different from the business owner.

MC Rev Strategic Investments, LLC. 757 Sinclair Circle, Brentwood, TN 37027

14. Will the permit be used to operate two or more restaurants or other businesses under the same permit as permitted by *TCA* § 57-5-103(a)(4) within the same building?

Yes _____ No X

If yes, specify number _____. List the names of the restaurants or other businesses and describe their location (use additional sheet if necessary).

15. How many managers are currently employed? 0
Please state the full name of each manager currently employed.

No managers currently employed for the location. Corporate employees below:

Katie Scully; Courtney Russell, Marsella James.

How many managers do you anticipate hiring? 3

[Management Team Information must be completed and submitted to the Town of Smyrna at the time application. A Management Team Information form must be completed for any managers who are hired and/or promoted after the granting of a beer permit within five (5) days of hiring. Failure to supply such information or update provided information may result in the revocation or suspension of a beer permit.]

16. Provide the following as applicable: ***Article of Incorporation, Partnership Agreement, or L.L.C. Operating Agreement;*** specifically the percent of ownership (private info may be redacted) *PLEASE ATTACH*

17. Has any person having at least a 5% ownership interest or any other employee of the business been convicted of any violation of the beer or alcoholic beverage laws or any crime (other than minor traffic violations) in the State of Tennessee or any other state within the last ten (10) years?

Yes _____ No X

If yes, give particulars of each charge, court, and date convicted.

_____

_____

Has any person having at least a 5% ownership interest or any other employee of the business been convicted of any crime violating a drug or alcohol law in the State of Tennessee or any other state within the last ten (10) years ?

Yes _____ No X

If yes, give particulars of each charge, court, and date convicted.

_____

_____

Has any person having at least a 5% ownership interest or any other employee of the business been convicted of any crime involving physical violence in the State of Tennessee or any other state within the last ten (10) years?

Yes _____ No X

If yes, give particulars of each charge, court, and date convicted.

_____

Is any person having at least a 5% ownership interest or any other employee of the business currently facing pending criminal charges?

Yes _____ No X

If yes, please state the date the charge was initiated, the nature of the charge the individual is currently facing, and the status of the pending charge.

_____

_____

18. Has this owner or the owners of the organization ever had a beer permit revoked, suspended, or denied in the State of Tennessee?

Yes _____ No X

If yes, specify where, when and why.

_____

_____

19. Give the name, **relationship to applicant** (if applicable) and address of the former beer permittee at this location.

N/A

_____

IT IS THE RESPONSIBILTY OF THE APPLICANT TO READ THE TOWN OF SMYRNA'S ADOPTED ORDINANCE AS PERTAINING TO DISTANCES OF ANY SCHOOL, CHURCH, FUNERAL HOME, HOSPITAL, LICENSED DAY CARE FACILITY, OR OTHER PLACE OF PUBLIC GATHERING AS IT RELATES TO THE SALE, STORAGE, AND MANUFACTURE OF BEER AND LIKE BEVERAGES.

20. What is the name and address of the church or other place of worship nearest to your business?

Springhouse Church (14119 Old Nashville Hwy, Smyrna, TN 37167); Smyrna Church of Christ (112 Division St, Smyrna, TN 37167)

21. What is the name and address of the school nearest to your business?

Smyrna Elementary School (1001 Sam Davis Rd, Smyrna, TN 37167); La Vergne High School (250 Wolverine Trail, La Vergne, TN 37086)

22. What is the name and address of the owner of the nearest funeral home to your business?

Woodfin Funeral Chapel, Smyrna (203 N Lowry St, Smyrna, TN 37167)

23. What is the name and address of the owner of the nearest hospital to your business?

TriStar Stonecrest Medical Center (200 StoneCrest Boulevard, Smyrna, TN 37167)

24. What is the name and address of the owner of the nearest day care facility to your business?

The Gingerbread House Childcare Learning Center (253 Sam Ridley Pkwy W, Smyrna, TN 37167)

24. Provide a complete list of the food preparation facilities and an accurate account of food preparation/ storage appliances for the business:

1 kitchen (see attached for equipment list) and 1 dishwasher

25. Attach the available menu for the business if available (preferred) or list the food items to be sold at the location:

See attached menu

26. List previous experience of operation of an On-Premise alcohol sale business:

Jonathan's Grille has 12 other locations with its first opening in 1999 with over 25 years of experience as a full service restaurant.

NO PERMIT SHALL BE ISSUED TO SELL BEER OR OTHER BEVERAGE COMING WITHIN THE PROVISIONS OF THIS CHAPTER IN VIOLATION OF ANY PROVISION OF STATE LAW, OR WHERE SUCH SALE WILL CAUSE CONGESTION OF TRAFFIC OR WILL INTERFERE WITH SCHOOLS, CHURCHES, OR OTHER PLACES OF PUBLIC GATHERING, OR WILL OTHERWISE INTERFERE WITH THE PUBLIC HEALTH, SAFETY, OR MORALS. ***(Smyrna Municipal Code Section 8-214)***

VERIFICATION

STATE OF Tennessee }

}

COUNTY OF Rutherford }

I, Katie Scully, applicant herein, hereby state under oath the following:

I hereby certify that no person having at least a 5% ownership interest, nor any person to be employed in the distribution or sale of beer in my establishment, has been convicted of any violation of the beer or alcoholic beverage laws, convicted of any crime violating any drug or alcohol law, convicted of a crime involving physical violence, or any crime involving moral turpitude within the past ten years.

I further agree to update information related to ownership and management as ownership and management change.

I am also aware that I shall not be issued a permit or my permit shall be revoked, if my business location causes traffic congestion or interferes with schools, churches or other places of public gathering, or otherwise interferes with public health, safety and morals.

I also certify that I have received a copy of the Town of Smyrna Beer Ordinance and the By-Laws and Rules of Procedure of the Smyrna Beer Board of Rutherford County, Tennessee. I state that I have read and understand the Beer Ordinance and the By-Laws. I further state that I am familiar with and understand the laws of the State of Tennessee related to the sale of beer. I further agree to abide by the Town of Smyrna Beer Ordinance and the laws of the State of Tennessee related to the sale of beer.

I further state that the information provided herein is true and correct. I understand that the information I have provided is subject to verification. By my signature below, I authorize and give consent for the Town of Smyrna to perform or obtain from a third party or outside agency a background check. This includes the following:

- Criminal background records/information
- Addresses
- Social Security Verification

I, the undersigned, authorize this information to be obtained either in writing or via telephone in connection with this beer permit application. Any person, firm or organization providing information or records in accordance with this authorization is released from any and all claims of liability for compliance. Such information will be held in confidence in accordance with the organization's guidelines and to the extent permitted under state law; however I acknowledge that any and all information obtained and maintained in connection with my application is subject to the Public Record Act embodied in Tennessee Code Annotated §10-7-101 et seq.. I further release the Town of Smyrna, and its agents, assigns, and employees, from any and all claims of liability related to the acquisition and/or dissemination of information as to this background report. I understand that I will be notified in writing if an adverse decision is made based on the information contained within this report, if such report is obtained by an independent third party organization.

I understand that providing false information or failing to update the information contained within this application, including management team information, and as required by the Town of Smyrna Beer Ordinance may cause my beer permit to be suspended or revoked. I understand that the beer permits are not transferable, and if there is any change in ownership, I will have to apply for a new beer permit.

	05/13/2026
Signature of Applicant/Owner (or authorized corporate officer)	Date

Sworn to and subscribed before me this 23 day of June, 20 26.

Notary Public

My Commission Expires: 5/29/2030

CHARLES S. BROWN JR. NOTARY PUBLIC STATE OF TENNESSEE WILLIAMSON CO.

[seal]

NOTICE: A non-refundable $250.00 fee must accompany this application. If the application is approved, you are required to provide documentation of sales tax registration to the Town within

ten days of approval. Any applicant making false statement in this application shall forfeit his/her permit and shall not be eligible to receive any permit for a period of ten years.

A privilege tax of $100.00 is imposed on the business of selling, distributing, storing or manufacturing beer in this state effective January 1, 1994, and each successive January 1. Any holder of a beer permit issued after January 1, 1994 shall pay a pro rata portion of this annual tax when the permit is issued.

Town of Smyrna Use (*Do not write in shaded area*)

Initials

- ☐ Beer Application Form (BAF) Completed _____
  - ☐ Driver's License Copied
  - ☐ If not US Citizen, proof of right to work copied
- ☐ Owner Application Form Completed _____
  - ☐ ***Not applicable according to BAF***
  - ☐ Driver's License Copied
  - ☐ If not US Citizen, proof of right to work copied

  **FORM NEEDED FOR ALL OWNERS LISTED
- ☐ Management Team Information Form Completed _____
  - ☐ ***Not applicable according to BAF***
  - ☐ Driver's License Copied
  - ☐ If not US Citizen, proof of right to work copied

  **FORM NEEDED FOR ALL MANAGERS LISTED

Date Completed Application Received: _____

☐ Codes Report Received ☐ Police Report Received

Beer Board Agenda Hearing Date: _____

Notification Sent (if any—state type and date sent):_____

Decision of Beer Board: _____ Date: _____



Clear ICE Status

NCIC - M. SOUTHERLAND
SMYRNA - M. SOUTHERLAND
RCSO - M. SOUTHERLAND

Bill Lee
Governor

TENNESSEE BUREAU OF INVESTIGATION
ATTN: TORIS
901 R.S. Gass Boulevard
Nashville, Tennessee 37216-2639
(615) 744-4057
Facsimile (615) 744-4289

David B. Rausch
Director

07/13/2026

MARSHA SOUTHERLAND
400 ENON SPRINGS RD EAST
SMYRNA POLICE DEPARTMENT
SMYRNA TN 37167

Tennessee Criminal History Records Request

NO TENNESSEE CRIMINAL HISTORY RECORD HAS BEEN FOUND FOR THE PERSON LISTED BELOW. NOTE: All aliases submitted have been searched.

MARSELLA EMELINDA JAMES
RAMIREZ, MARSELLA

Please be aware that, unless a fingerprint comparison is performed, it is impossible for the Tennessee Bureau of Investigation to be sure the record belongs to the individual you requested . A fingerprint comparison will only be performed in the event of a written appeal of criminal history results. The information you receive will be based on only those arrests which occurred within the state of Tennessee.

The Tennessee Bureau of Investigation found no Tennessee criminal history based on the information provided. No criminal record check was conducted for other states or for the Federal Bureau of Investigation.

Tennessee Open Records Information Services
Tennessee Bureau of Investigation
901 R.S. Gass Blvd.
Nashville, TN 37216

BEER PERMIT APPLICATION FORM

Management Team Information

[The below information must be completed for and by each and every manager, whether full-time or part-time. Failure to provide information on managers will result in a delay of issuance of a beer permit. Failure to update manager information, including the employment of new managers, may result in suspension or revocation of a beer permit. Use additional sheets as necessary.]

1. Give the following information of any manager other than the applicant:

Name: Marsella James / Marsella Emelinda Ramirez James

Address [redacted]

Murfreesboro, TN 37129

Date of birth: [redacted]

Place of birth: Tarzana, California

Social Security Number: [redacted]

Driver's License Number: [redacted] Expiration: 1/30/27 State: TN

American Citizen X or Legal Resident Alien _____

2. Has the above-listed manager been convicted of any violation of the beer or alcoholic beverage laws or any crime (other than minor traffic violations) within the last ten years?

Yes ____ No X

If yes, give particulars of each charge, court, and date convicted.

_____

_____

3. Has the above-listed manager been convicted of any crime violating a drug or alcohol law in the State of Tennessee or any other state within the last ten (10) years?

Yes ____ No X

If yes, give particulars of each charge, court, and date convicted.

_____

_____

4. Has the above-listed manager been convicted of any crime involving physical violence in the State of Tennessee or any other state within the last ten (10) years?

Yes ____ No X

If yes, give particulars of each charge, court, and date convicted.

_____

_____

5. Is the above-listed manager currently facing pending charges for any criminal violation in this state or any other state?

Yes ____ No X

If yes, give particulars of each charge, court, and date convicted.

_____

_____

VERIFICATION

STATE OF _____ }
}
COUNTY OF _____ }

I, Marsela James, am a manager for the applicant herein. I hereby state under oath the following:

I certify that the above information provided is true and correct. I agree to furnish information to the applicant and the Town of Smyrna if there is any change related to my answers to the questions herein. I understand that the information I have provided is subject to verification. By my signature below, I authorize and

give consent for the Town of Smyrna to perform or obtain from a third party or outside agency a background check. This includes the following:

- Criminal background records/information
- Addresses
- Social Security Verification

I, the undersigned, authorize this information to be obtained either in writing or via telephone in connection with this beer permit application. Any person, firm or organization providing information or records in accordance with this authorization is released from any and all claims of liability for compliance. Such information will be held in confidence in accordance with the organization's guidelines and to the extent permitted under state law; however I acknowledge that any and all information obtained and maintained in connection with my application is subject to the Public Records Act embodied in Tennessee Code Annotated §10-7-101 et seq. I further release the Town of Smyrna, and its agents, assigns, and employees, from any and all claims of liability related to the acquisition and/or dissemination of information as to this background report. I understand that I will be notified in writing if an adverse decision is made based on the information contained within this report, if such report is obtained by an independent third party organization.

I have read the Town of Smyrna Beer Ordinance. I am familiar with the laws of the State of Tennessee related to the sale of beer. I agree to abide by the Town of Smyrna Beer Ordinance and the laws of the State of Tennessee related to the sale of beer.

Signature of Manager _____ Date 05/12/26

Sworn to and subscribed before me this 23 day of June, 20 26.

Notary Public

My Commission Expires: 5/29/2030 [seal]

CHARLES S. BROWN JR NOTARY PUBLIC STATE OF TENNESSEE WILLIAMSON COUNTY

Unable to Verify ICE Status-

NCIC - M. SOUTHERLAND
SMYRNA - M. SOUTHERLAND
RCSO - M. SOUTHERLAND



Jason Irvin, Chief of Police

Smyrna Police Department

400 Enon Springs Road East, Smyrna, Tennessee 37167

July 6, 2026

To whom it may concern,

We are not showing an arrest record for Courtney Allen Russell, date of birth 6/25/1984.

We are not showing an arrest record for Bullington, Orbin Cliffton, date of birth 10/15/1994.

We are not showing an arrest record for Wilson, Ciriyah Denise, date of birth 127/1998.

Sincerely,

Jason Irvin
Chief of Police

JI/ms

DISPATCH: (615) 459-6644
RECORDS: (615) 355-5731
DETECTIVES: (615)355-7530
FAX: (615) 459-9751
ADMINISTRATION: (615) 355-5705
CID FAX: (615) 355-5712

Bill Lee
Governor

TENNESSEE BUREAU OF INVESTIGATION
ATTN: TORIS
901 R.S. Gass Boulevard
Nashville, Tennessee 37216-2639
(615) 744-4057
Facsimile (615) 744-4289

David B. Rausch
Director

07/06/2026

MARSHA SOUTHERLAND
400 ENON SPRINGS RD EAST
SMYRNA POLICE DEPARTMENT
SMYRNA TN 37167

Tennessee Criminal History Records Request

NO TENNESSEE CRIMINAL HISTORY RECORD HAS BEEN FOUND FOR THE PERSON LISTED BELOW. NOTE: All aliases submitted have been searched.

COURTNEY ALLEN RUSSELL

Please be aware that, unless a fingerprint comparison is performed, it is impossible for the Tennessee Bureau of Investigation to be sure the record belongs to the individual you requested . A fingerprint comparison will only be performed in the event of a written appeal of criminal history results. The information you receive will be based on only those arrests which occurred within the state of Tennessee.

The Tennessee Bureau of Investigation found no Tennessee criminal history based on the information provided. No criminal record check was conducted for other states or for the Federal Bureau of Investigation.

Tennessee Open Records Information Services
Tennessee Bureau of Investigation
901 R.S. Gass Blvd.
Nashville, TN 37216

BEER PERMIT APPLICATION FORM

Management Team Information

[The below information must be completed for and by each and every manager, whether full-time or part-time. Failure to provide information on managers will result in a delay of issuance of a beer permit. Failure to update manager information, including the employment of new managers, may result in suspension or revocation of a beer permit. Use additional sheets as necessary.]

1. Give the following information of any manager other than the applicant:

Name: Courtney Russell Courtney Allen Russell

Address: [redacted]

Dickson, TN 37055

Date of birth: [redacted]

Place of birth: Nashville, TN

Social Security Number: [redacted]

Driver's License Number: [redacted] Expiration: 08/05/32 State: TN

American Citizen X or Legal Resident Alien _____

2. Has the above-listed manager been convicted of any violation of the beer or alcoholic beverage laws or any crime (other than minor traffic violations) within the last ten years?
Yes _____ No X

If yes, give particulars of each charge, court, and date convicted.

_____

_____

3. Has the above-listed manager been convicted of any crime violating a drug or alcohol law in the State of Tennessee or any other state within the last ten (10) years?

Yes _____ No __X__

If yes, give particulars of each charge, court, and date convicted.

_____

_____

4. Has the above-listed manager been convicted of any crime involving physical violence in the State of Tennessee or any other state within the last ten (10) years?

Yes _____ No __X__

If yes, give particulars of each charge, court, and date convicted.

_____

_____

5. Is the above-listed manager currently facing pending charges for any criminal violation in this state or any other state?

Yes _____ No __X__

If yes, give particulars of each charge, court, and date convicted.

_____

_____

VERIFICATION

STATE OF _____ }
}
COUNTY OF _____ }

I, _____, am a manager for the applicant herein. I hereby state under oath the following:

I certify that the above information provided is true and correct. I agree to furnish information to the applicant and the Town of Smyrna if there is any change related to my answers to the questions herein. I understand that the information I have provided is subject to verification. By my signature below, I authorize and

give consent for the Town of Smyrna to perform or obtain from a third party or outside agency a background check. This includes the following:

- Criminal background records/information
- Addresses
- Social Security Verification

I, the undersigned, authorize this information to be obtained either in writing or via telephone in connection with this beer permit application. Any person, firm or organization providing information or records in accordance with this authorization is released from any and all claims of liability for compliance. Such information will be held in confidence in accordance with the organization's guidelines and to the extent permitted under state law; however I acknowledge that any and all information obtained and maintained in connection with my application is subject to the Public Records Act embodied in Tennessee Code Annotated §10-7-101 et seq. I further release the Town of Smyrna, and its agents, assigns, and employees, from any and all claims of liability related to the acquisition and/or dissemination of information as to this background report. I understand that I will be notified in writing if an adverse decision is made based on the information contained within this report, if such report is obtained by an independent third party organization.

I have read the Town of Smyrna Beer Ordinance. I am familiar with the laws of the State of Tennessee related to the sale of beer. I agree to abide by the Town of Smyrna Beer Ordinance and the laws of the State of Tennessee related to the sale of beer.

Signature of Manager

5/12/26
Date

Sworn to and subscribed before me this 23 day of June, 2026.

Notary Public

My Commission Expires: 6/29/2030

[seal]

WILLIAM CHARLES S. BROWN JR
NOTARY PUBLIC
STATE OF TENNESSEE
WILLIAMSON COUNTY


DRIVER LICENSE
USA
TN
Tennessee
THE VOLUNTEER STATE
DL NO [redacted]
DOB 09/25/1986
EXP 08/05/2032
ISS 08/05/2024
CLASS D
END NONE
REST 01
SEX F HGT 5'-07" EYES BRO
DD [redacted]
DL
RUSSELL
COURTNEY ALLEN
[redacted]
DICKSON, TN 37055

Jason Irvin, Chief of Police

Smyrna Police Department

400 Enon Springs Road East, Smyrna, Tennessee 37167

July 6, 2026

To whom it may concern,

We are showing the following arrest record(s) from the Tennessee Bureau of Investigation for Lowell Lofton Tew, date of birth [redacted]:

8/29/2012 - Driving on Suspended License
Metro Nashville Police Department

Sincerely,

Jason Irvin
Chief of Police

JI/ms

DISPATCH: (615) 459-6644
RECORDS: (615) 355-5731
DETECTIVES: (615)355-7530

FAX: (615) 459-9751
ADMINISTRATION: (615) 355-5705
CID FAX: (615) 355-5712

Bill Lee
Governor

TENNESSEE BUREAU OF INVESTIGATION
ATTN: TORIS
901 R.S. Gass Boulevard
Nashville, Tennessee 37216-2639
(615) 744-4057
Facsimile (615) 744-4289

David B. Rausch
Director

07/06/2026

MARSHA SOUTHERLAND
400 ENON SPRINGS RD EAST
SMYRNA POLICE DEPARTMENT
SMYRNA TN 37167

Tennessee Criminal History Records Request

Attached is the response to your request for a criminal history record check on the following individual in which Tennessee information was found. NOTE: All aliases submitted have been searched.

LOWELL LOFTON TEW

Please be aware that, unless a fingerprint comparison is performed, it is impossible for the Tennessee Bureau of Investigation to be sure the record belongs to the individual you requested. A fingerprint comparison will only be performed in the event of a written appeal of criminal history results. The information you receive will be based on only those arrests which occurred within the state of Tennessee.

The Tennessee Bureau of Investigation found Tennessee criminal history based on the information provided. No criminal record check was conducted for other states or for the Federal Bureau of Investigation.

Tennessee Open Records Information Services
Tennessee Bureau of Investigation
901 R.S. Gass Blvd.
Nashville, TN 37216

THIS RECORD IS BASED ONLY ON THE SID OR FBI NUMBER IN YOUR REQUEST (3515114) BECAUSE ADDITIONS OR DELETIONS MAY BE MADE AT ANY TIME, A NEW COPY SHOULD BE REQUESTED WHEN NEEDED FOR SUBSEQUENT USE. USE OF THE FOLLOWING RECORD IS REGULATED BY LAW. IT IS FURNISHED FOR OFFICIAL USE ONLY AND SHOULD ONLY BE USED FOR THE PURPOSE REQUESTED. WHEN EXPLANATION OF A CHARGE OR DISPOSITION IS NEEDED, COMMUNICATE DIRECTLY WITH THE AGENCY THAT CONTRIBUTED THE FINGERPRINTS. (TBI; 2005-06-28)

********** IDENTIFICATION **********

SUBJECT NAME(S)

TEW, LOWELL LOFTON

TEW, LOWELL LOFTON (AKA)

SUBJECT DESCRIPTION

SOCIAL SECURITY NUMBER
match

SEX	RACE	SKIN TONE
MALE	WHITE	UNKNOWN
HEIGHT	WEIGHT	DATE OF BIRTH
6'01"	240	[redacted]
HAIR COLOR	EYE COLOR	
BLONDE OR STRAWBERRY	BLUE	

PLACE OF BIRTH
MS
RESIDENCE
RESIDENCE AS OF 2012-09-18
1519 BOSCOBEL ST
NASHVILLE, TN 37206

********** CRIMINAL HISTORY **********

========== CYCLE 001 ==========

TRACKING NUMBER	190012069737		
EARLIEST EVENT DATE	2012-08-29	INCIDENT DATE	2012-08-29

ARREST DATE	2012-08-29
ARREST CASE NUMBER	481738
ARRESTING AGENCY	TN0190100 METROPOLITAN NASHVILLE PD
SUBJECT'S NAME	LOWELL LOFTON TEW
OFFENDER ID NUMBER	3515114
CHARGE NUMBER	107125253
CHARGE TRACKING NUMBER	190012069737
CHARGE LITERAL	DRIVING- SUSPENDED LICENSE
COUNTS	1
SEVERITY	UNKNOWN

********** INDEX OF AGENCIES **********

AGENCY METROPOLITAN NASHVILLE PD; TN0190100;

* * * END OF RECORD * * *

##########

Jonathan's

BEER PERMIT APPLICATION FORM

Management Team Information

[The below information must be completed for and by each and every manager, whether full-time or part-time. Failure to provide information on managers will result in a delay of issuance of a beer permit. Failure to update manager information, including the employment of new managers, may result in suspension or revocation of a beer permit. Use additional sheets as necessary.]

1. Give the following information of any manager other than the applicant:

Name: Lofton Tew Lowell Lofton Tew

Address: [redacted]

Columbia, TN 38401

Date of birth: [redacted] ✓

Place of birth: Flowood, Mississippi

Social Security Number: [redacted]

Driver's License Number: [redacted] ✓ Expiration: 7/03/2027 State: TN

American Citizen Yes or Legal Resident Alien _____

2. Has the above-listed manager been convicted of any violation of the beer or alcoholic beverage laws or any crime (other than minor traffic violations) within the last ten years?
Yes _____ No X

If yes, give particulars of each charge, court, and date convicted.

_____

_____

3. Has the above-listed manager been convicted of any crime violating a drug or alcohol law in the State of Tennessee or any other state within the last ten (10) years?

Yes _____ No __X__

If yes, give particulars of each charge, court, and date convicted.

_____

_____

4. Has the above-listed manager been convicted of any crime involving physical violence in the State of Tennessee or any other state within the last ten (10) years?

Yes _____ No __X__

If yes, give particulars of each charge, court, and date convicted.

_____

_____

5. Is the above-listed manager currently facing pending charges for any criminal violation in this state or any other state?

Yes _____ No __X__

If yes, give particulars of each charge, court, and date convicted.

_____

_____

VERIFICATION

STATE OF Tennessee }
}
COUNTY OF Rutherford }

I, Lofton Tew, am a manager for the applicant herein. I hereby state under oath the following:

I certify that the above information provided is true and correct. I agree to furnish information to the applicant and the Town of Smyrna if there is any change related to my answers to the questions herein. I understand that the information I have provided is subject to verification. By my signature below, I authorize and

give consent for the Town of Smyrna to perform or obtain from a third party or outside agency a background check. This includes the following:

- Criminal background records/information
- Addresses
- Social Security Verification

I, the undersigned, authorize this information to be obtained either in writing or via telephone in connection with this beer permit application. Any person, firm or organization providing information or records in accordance with this authorization is released from any and all claims of liability for compliance. Such information will be held in confidence in accordance with the organization's guidelines and to the extent permitted under state law; however I acknowledge that any and all information obtained and maintained in connection with my application is subject to the Public Records Act embodied in Tennessee Code Annotated §10-7-101 et seq. I further release the Town of Smyrna, and its agents, assigns, and employees, from any and all claims of liability related to the acquisition and/or dissemination of information as to this background report. I understand that I will be notified in writing if an adverse decision is made based on the information contained within this report, if such report is obtained by an independent third party organization.

I have read the Town of Smyrna Beer Ordinance. I am familiar with the laws of the State of Tennessee related to the sale of beer. I agree to abide by the Town of Smyrna Beer Ordinance and the laws of the State of Tennessee related to the sale of beer.

Signature of Manager

5//13/2026
Date

Sworn to and subscribed before me this 23 day of June, 20 26.

Notary Public

My Commission Expires: 5/29/2030 [seal]



TENNESSEE USA
THE VOLUNTEER STATE

NOT FOR REAL ID ACT PURPOSES

DRIVER LICENSE



TEW
LOWELL LOFTON
[redacted]

COLUMBIA, TN 38401-4613

DL NO. [redacted]
DOB 06/25/1984
EXP 07/03/2027
ISS 11/04/2024

REST 01
CLASS DM
END NONE

840625

SEX M
HGT 6'-00" EYES HAZ
DD [redacted]



Bill Lee
Governor

TENNESSEE BUREAU OF INVESTIGATION
ATTN: TORIS
901 R.S. Gass Boulevard
Nashville, Tennessee 37216-2639
(615) 744-4057
Facsimile (615) 744-4289

David B. Rausch
Director

07/06/2026

MARSHA SOUTHERLAND
400 ENON SPRINGS RD EAST
SMYRNA POLICE DEPARTMENT
SMYRNA TN 37167

Tennessee Criminal History Records Request

NO TENNESSEE CRIMINAL HISTORY RECORD HAS BEEN FOUND FOR THE PERSON LISTED BELOW. NOTE: All aliases submitted have been searched.

CIRIYAH DENISE WILSON

Please be aware that, unless a fingerprint comparison is performed, it is impossible for the Tennessee Bureau of Investigation to be sure the record belongs to the individual you requested . A fingerprint comparison will only be performed in the event of a written appeal of criminal history results. The information you receive will be based on only those arrests which occurred within the state of Tennessee.

The Tennessee Bureau of Investigation found no Tennessee criminal history based on the information provided. No criminal record check was conducted for other states or for the Federal Bureau of Investigation.

Tennessee Open Records Information Services
Tennessee Bureau of Investigation
901 R.S. Gass Blvd.
Nashville, TN 37216

BEER PERMIT APPLICATION FORM

Management Team Information

[The below information must be completed for and by each and every manager, whether full-time or part-time. Failure to provide information on managers will result in a delay of issuance of a beer permit. Failure to update manager information, including the employment of new managers, may result in suspension or revocation of a beer permit. Use additional sheets as necessary.]

1. Give the following information of any manager other than the applicant: Denise

Name: Ciriyah Wilson

Address: [redacted], Nashville, TN. 37221

Date of birth: [redacted] ✓

Place of birth: Nashville, TN.

Social Security Number: [redacted]

Driver's License Number: [redacted] Expiration: 11/18/2028 State: TN.

American Citizen X or Legal Resident Alien _____

2. Has the above-listed manager been convicted of any violation of the beer or alcoholic beverage laws or any crime (other than minor traffic violations) within the last ten years?
Yes _____ No X

If yes, give particulars of each charge, court, and date convicted.

3. Has the above-listed manager been convicted of any crime violating a drug or alcohol law in the State of Tennessee or any other state within the last ten (10) years?

Yes _____ No X

If yes, give particulars of each charge, court, and date convicted.

_____

_____

4. Has the above-listed manager been convicted of any crime involving physical violence in the State of Tennessee or any other state within the last ten (10) years?

Yes _____ No X

If yes, give particulars of each charge, court, and date convicted.

_____

_____

5. Is the above-listed manager currently facing pending charges for any criminal violation in this state or any other state?

Yes _____ No X

If yes, give particulars of each charge, court, and date convicted.

_____

_____

VERIFICATION

STATE OF Tennessee }
}
COUNTY OF Davidson }

I, Ciriyah Wilson, am a manager for the applicant herein. I hereby state under oath the following:

I certify that the above information provided is true and correct. I agree to furnish information to the applicant and the Town of Smyrna if there is any change related to my answers to the questions herein. I understand that the information I have provided is subject to verification. By my signature below, I authorize and

give consent for the Town of Smyrna to perform or obtain from a third party or outside agency a background check. This includes the following:

- Criminal background records/information
- Addresses
- Social Security Verification

I, the undersigned, authorize this information to be obtained either in writing or via telephone in connection with this beer permit application. Any person, firm or organization providing information or records in accordance with this authorization is released from any and all claims of liability for compliance. Such information will be held in confidence in accordance with the organization's guidelines and to the extent permitted under state law; however I acknowledge that any and all information obtained and maintained in connection with my application is subject to the Public Records Act embodied in Tennessee Code Annotated §10-7-101 et seq. I further release the Town of Smyrna, and its agents, assigns, and employees, from any and all claims of liability related to the acquisition and/or dissemination of information as to this background report. I understand that I will be notified in writing if an adverse decision is made based on the information contained within this report, if such report is obtained by an independent third party organization.

I have read the Town of Smyrna Beer Ordinance. I am familiar with the laws of the State of Tennessee related to the sale of beer. I agree to abide by the Town of Smyrna Beer Ordinance and the laws of the State of Tennessee related to the sale of beer.

Signature of Manager _____ Date 5/14/2026

Sworn to and subscribed before me this 23 day of June, 2026.

Notary Public _____

My Commission Expires: 5/29/2030 [seal]

CHARLES S. BROWN JR NOTARY PUBLIC STATE OF TENNESSEE WILLIAMSON COUNTY


USA
TN
DRIVER LICENSE
Tennessee
THE VOLUNTEER STATE
NOT FOR REAL ID ACT PURPOSES
DL NO [redacted]
DOB 01/27/1998
EXP 11/18/2028
ISS 11/18/2020
CLASS D
END NONE
REST NONE
SEX F HGT 5'-06" EYES BLK
DD 301201118104470O
DL
WILSON
CIRIYAH DENISE
[redacted]
NASHVILLE, TN 37221

Bill Lee
Governor

TENNESSEE BUREAU OF INVESTIGATION
ATTN: TORIS
901 R.S. Gass Boulevard
Nashville, Tennessee 37216-2639
(615) 744-4057
Facsimile (615) 744-4289

David B. Rausch
Director

07/06/2026

MARSHA SOUTHERLAND
400 ENON SPRINGS RD EAST
SMYRNA POLICE DEPARTMENT
SMYRNA TN 37167

Tennessee Criminal History Records Request

NO TENNESSEE CRIMINAL HISTORY RECORD HAS BEEN FOUND FOR THE PERSON LISTED BELOW. NOTE: All aliases submitted have been searched.

ORBIN CLIFFTON BULLINGTON

Please be aware that, unless a fingerprint comparison is performed, it is impossible for the Tennessee Bureau of Investigation to be sure the record belongs to the individual you requested . A fingerprint comparison will only be performed in the event of a written appeal of criminal history results. The information you receive will be based on only those arrests which occurred within the state of Tennessee.

The Tennessee Bureau of Investigation found no Tennessee criminal history based on the information provided. No criminal record check was conducted for other states or for the Federal Bureau of Investigation.

Tennessee Open Records Information Services
Tennessee Bureau of Investigation
901 R.S. Gass Blvd.
Nashville, TN 37216

BEER PERMIT APPLICATION FORM

Management Team Information

[The below information must be completed for and by each and every manager, whether full-time or part-time. Failure to provide information on managers will result in a delay of issuance of a beer permit. Failure to update manager information, including the employment of new managers, may result in suspension or revocation of a beer permit. Use additional sheets as necessary.]

1. Give the following information of any manager other than the applicant:

Name: Orbin Bullington Orbin Clifton Bullington III

Address: [redacted]

Nashville, Tn 37214

Date of birth: [redacted]

Place of birth: Hattiesburg, MS

Social Security Number: [redacted]

Driver's License Number: [redacted] Expiration: 11/19/32 State: TN

American Citizen ✓ or Legal Resident Alien _____

2. Has the above-listed manager been convicted of any violation of the beer or alcoholic beverage laws or any crime (other than minor traffic violations) within the last ten years?
Yes ____ No ✓

If yes, give particulars of each charge, court, and date convicted.

/

3. Has the above-listed manager been convicted of any crime violating a drug or alcohol law in the State of Tennessee or any other state within the last ten (10) years?

Yes ____ No ✓

If yes, give particulars of each charge, court, and date convicted.

4. Has the above-listed manager been convicted of any crime involving physical violence in the State of Tennessee or any other state within the last ten (10) years?

Yes ____ No ✓

If yes, give particulars of each charge, court, and date convicted.

5. Is the above-listed manager currently facing pending charges for any criminal violation in this state or any other state?

Yes ____ No ✓

If yes, give particulars of each charge, court, and date convicted.

VERIFICATION

STATE OF Tennessee }
COUNTY OF Rutherford }

I, Orbin Bullington, am a manager for the applicant herein. I hereby state under oath the following:

I certify that the above information provided is true and correct. I agree to furnish information to the applicant and the Town of Smyrna if there is any change related to my answers to the questions herein. I understand that the information I have provided is subject to verification. By my signature below, I authorize and

give consent for the Town of Smyrna to perform or obtain from a third party or outside agency a background check. This includes the following:

- Criminal background records/information
- Addresses
- Social Security Verification

I, the undersigned, authorize this information to be obtained either in writing or via telephone in connection with this beer permit application. Any person, firm or organization providing information or records in accordance with this authorization is released from any and all claims of liability for compliance. Such information will be held in confidence in accordance with the organization's guidelines and to the extent permitted under state law; however I acknowledge that any and all information obtained and maintained in connection with my application is subject to the Public Records Act embodied in Tennessee Code Annotated §10-7-101 et seq. I further release the Town of Smyrna, and its agents, assigns, and employees, from any and all claims of liability related to the acquisition and/or dissemination of information as to this background report. I understand that I will be notified in writing if an adverse decision is made based on the information contained within this report, if such report is obtained by an independent third party organization.

I have read the Town of Smyrna Beer Ordinance. I am familiar with the laws of the State of Tennessee related to the sale of beer. I agree to abide by the Town of Smyrna Beer Ordinance and the laws of the State of Tennessee related to the sale of beer.

Signature of Manager _____ Date 5/12/26

Sworn to and subscribed before me this 23 day of June, 2026.

Notary Public

My Commission Expires: 5/29/2030 [seal]

CHARLES S. BROWN JR NOTARY PUBLIC STATE OF TENNESSEE WILLIAMSON COUNTY


TENNESSEE
THE VOLUNTEER STATE
DRIVER LICENSE
BULLINGTON
ORBIN CLIFFTON, IV
[redacted]
NASHVILLE, TN 37214-2648
DL NO. [redacted]
DOB 10/15/1994
EXP 11/19/2032
ISS 11/19/2024
REST NONE
CLASS D
END NONE
SEX M
HGT 5'-10"
EYES HAZ
DD [redacted]
941015

Bill Lee
Governor

TENNESSEE BUREAU OF INVESTIGATION
ATTN: TORIS
901 R.S. Gass Boulevard
Nashville, Tennessee 37216-2639
(615) 744-4057
Facsimile (615) 744-4289

David B. Rausch
Director

07/13/2026

MARSHA SOUTHERLAND
400 ENON SPRINGS RD EAST
SMYRNA POLICE DEPARTMENT
SMYRNA TN 37167

Tennessee Criminal History Records Request

NO TENNESSEE CRIMINAL HISTORY RECORD HAS BEEN FOUND FOR THE PERSON LISTED BELOW. NOTE: All aliases submitted have been searched.

ASHLEA NICOLE LACKEY

Please be aware that, unless a fingerprint comparison is performed, it is impossible for the Tennessee Bureau of Investigation to be sure the record belongs to the individual you requested . A fingerprint comparison will only be performed in the event of a written appeal of criminal history results. The information you receive will be based on only those arrests which occurred within the state of Tennessee.

The Tennessee Bureau of Investigation found no Tennessee criminal history based on the information provided. No criminal record check was conducted for other states or for the Federal Bureau of Investigation.

Tennessee Open Records Information Services
Tennessee Bureau of Investigation
901 R.S. Gass Blvd.
Nashville, TN 37216

BEER PERMIT APPLICATION FORM

Management Team Information

[The below information must be completed for and by each and every manager, whether full-time or part-time. Failure to provide information on managers will result in a delay of issuance of a beer permit. Failure to update manager information, including the employment of new managers, may result in suspension or revocation of a beer permit. Use additional sheets as necessary.]

1. Give the following information of any manager other than the applicant:

Name: Ashlea Nicole Lackey

Address: [redacted] Lebanon, TN

Date of birth: [redacted] ✓

Place of birth: Lakeland, FL

Social Security Number: [redacted]

Driver's License Number: [redacted] ✓ Expiration: 03/19/29 State: TN

American Citizen ✓ or Legal Resident Alien _____

2. Has the above-listed manager been convicted of any violation of the beer or alcoholic beverage laws or any crime (other than minor traffic violations) within the last ten years?
Yes _____ No ✓

If yes, give particulars of each charge, court, and date convicted.

_____

_____

3. Has the above-listed manager been convicted of any crime violating a drug or alcohol law in the State of Tennessee or any other state within the last ten (10) years?

Yes ____ No ✓

If yes, give particulars of each charge, court, and date convicted.

_____

_____

4. Has the above-listed manager been convicted of any crime involving physical violence in the State of Tennessee or any other state within the last ten (10) years?

Yes ____ No ✓

If yes, give particulars of each charge, court, and date convicted.

_____

_____

5. Is the above-listed manager currently facing pending charges for any criminal violation in this state or any other state?

Yes ____ No ✓

If yes, give particulars of each charge, court, and date convicted.

_____

_____

VERIFICATION

STATE OF Tennessee }
}
COUNTY OF Rutherford }

I, Ashlea Lackey, am a manager for the applicant herein. I hereby state under oath the following:

I certify that the above information provided is true and correct. I agree to furnish information to the applicant and the Town of Smyrna if there is any change related to my answers to the questions herein. I understand that the information I have provided is subject to verification. By my signature below, I authorize and

give consent for the Town of Smyrna to perform or obtain from a third party or outside agency a background check. This includes the following:

- Criminal background records/information
- Addresses
- Social Security Verification

I, the undersigned, authorize this information to be obtained either in writing or via telephone in connection with this beer permit application. Any person, firm or organization providing information or records in accordance with this authorization is released from any and all claims of liability for compliance. Such information will be held in confidence in accordance with the organization's guidelines and to the extent permitted under state law; however I acknowledge that any and all information obtained and maintained in connection with my application is subject to the Public Records Act embodied in Tennessee Code Annotated §10-7-101 et seq. I further release the Town of Smyrna, and its agents, assigns, and employees, from any and all claims of liability related to the acquisition and/or dissemination of information as to this background report. I understand that I will be notified in writing if an adverse decision is made based on the information contained within this report, if such report is obtained by an independent third party organization.

I have read the Town of Smyrna Beer Ordinance. I am familiar with the laws of the State of Tennessee related to the sale of beer. I agree to abide by the Town of Smyrna Beer Ordinance and the laws of the State of Tennessee related to the sale of beer.

Signature of Manager

05/17/24
Date

Sworn to and subscribed before me this 23 day of June, 2024.

Notary Public

My Commission Expires: 4/29/2030 [seal]

CHARLES S. BROWN JR NOTARY PUBLIC STATE OF TENNESSEE WILLIAMSON COUNTY

USA
TN

Tennessee

THE VOLUNTEER STATE

DRIVER LICENSE



NOT FOR REAL ID ACT PURPOSES

DL NO [redacted] DOB 03/19/2000

EXP 03/19/2029 ISS 03/19/2021

CLASS D END NONE

REST NONE

SEX F HGT 5'-05" EYES BLU

DD [redacted]

LACKEY
ASHLEA NICOLE
[redacted]

LEBANON, TN 37090



NCIC - M. SOUTHERLAND
SMYRNA - M. SOUTHERLAND
RCSO - M. SOUTHERLAND

Unable to verify ICE Status.

Town of Smyrna Business Tax License

JONATHAN'S GRILLE - SMYRNA, LLC
JONATHAN'S GRILLE - SMYRNA, LLC
3325 ASPEN GROVE DR
SUITE 201
FRANKLIN, TN 37067-2905

Date Issued: **05/18/2026**
Business Tax Classification: **2**
This license is valid for the
Tax Period: **01/01/2026** to **12/31/2026**
Payment Due By: **04/15/2027**
License Number: **2027 71721**
Local Tax Account #: **501014**
Location ID #: **1001956013**

The business tax license printed below certifies the receipt and approval of your business tax license application or the renewal of a license for your existing business. The certificate must be displayed publicly at the location for which it is issued.

To avoid penalty, interest and potential enforced collection action, business tax returns and payments must be remitted to the Tennessee Department of Revenue at least 30 days prior to the expiration date of this license. Further notification of expiration is not required by law— please note the expiration date above. Businesses ceasing operation must file a final business tax return and make full payment of business taxes due within 15 days of closure. (Not applicable to class 5 transient/special events/vendors.)

All tax returns and payments must be made to the Tennessee Department of Revenue. Electronic filing and payment is required for certain taxpayers and encouraged for all. Please visit www.TN.gov/Revenue for more information on business tax and filing requirements.

Note: This license does not permit operation unless properly zoned and/or in compliance with all other applicable state, county, or city laws, rules, and regulations. Also, as required by Tenn. Code Ann. Section 39-17-1801 et seq., businesses must comply with all provisions of the Tennessee Non-Smoker Protection Act.

DETACH LICENSE BELOW AND DISPLAY IN PUBLIC AREA

Town of Smyrna Business Tax License

This certificate must be publicly displayed

JONATHAN'S GRILLE - SMYRNA, LLC
JONATHAN'S GRILLE - SMYRNA, LLC
160 W SAM RIDLEY PKWY
SMYRNA, TN 37167-5629

Date Issued: **05/18/2026**
Business Tax Classification: **2**
This license is valid for the
Tax Period: **01/01/2026** to **12/31/2026**
Payment Due By: **04/15/2027**
License Number: **2027 71721**
Local Tax Account #: **501014**
Location ID #: **1001956013**

Authorized Official, by _____

Town of Smyrna
Business Zoning Compliance Application

Complete this document to ensure your business has the proper zoning and is a permitted use for its location.

Contact Name: Katie Scully

Business Name: Jonathans Grille

Business Address: 160 W. Sam Ridley Parkway Smyrna TN 37167

Business Phone: 615-814-2866 Business Email: katie@jonathansgrille.com

Type of Business at this Location: full service restaurant and bar

Retail Sale of: food, liquor, beer and wine
(OR)
Type of Service: _____

In-Home Business Conditions Only

Conditions of Approval

1. No employees at business site address other than those that live in the home.
2. There can be no more than one (1) client at a time at business site address.
3. There must be NO outside storage of any item/items at any time in conjunction with this in-home occupancy.
4. Signs are permitted with a maximum size of six (6) square feet. Signs are not permitted in the city right-of-way. Directional signs are not permitted on any city right-of-way.
5. This zoning application is not an exemption from abiding by all applicable Town of Smyrna ordinances.

For in-home occupations, will customers/clients be visiting your home address? Yes_____/No_____
If yes, how many? Per day _____ / Per week _____.

Print Name: Katie Scully Date: 5/13/2026

Signature: _____

Planning Department Comments

Zoning District: PUD Approve ✓ Disapprove _____ Other _____

Staff Comments:

Staff Name: MATT WHITMAN Initials: _____ Date: 5.18.26

EST. 1999

JONATHAN'S GRILLE

@JONATHANSGRILLE

ORDER ONLINE
JONATHANSGRILLE.COM

STARTERS

Happy Hour Starters from 3PM-6PM Monday - Friday

Sub veggies for tortilla chips | 4

Nashville Hot Chicken Sliders | 14
our hand-battered hot chicken tender sliders topped with pickle chips

***Queso | 11** GF
served with tortilla chips
add chili | 2

***Pepperoni Pizza Rolls | 13**
cheese & pepperoni rolled up in our homemade pizza dough, served with hot marinara

***Spinach & Artichoke Dip | 13**
topped with cheese & tomatoes

Fried Cauliflower | 15
lightly battered, drizzled with mild garlic sauce, topped with green onions & bleu cheese crumbles

Chicken Parmesan Sliders | 16
grilled chicken, creamy marinara, fresh mozzarella cheese, fresh basil and sweet balsamic drizzle

Lemon Basil Chicken Skewers | 17
served with warm pita bread, pesto hummus & garnished with a fresh cucumber tomato salad

Crispy Brussels Sprouts | 13 GF
drizzled with sweet chili sauce

***Fried Pickles | 11**
served with horseradish sauce & ranch

***Prime Rib Sliders* | 17**
shaved prime rib, grilled onions, mozzarella cheese & chipotle mayo

Triple Dipper | 20 NEW!
house-made salsa, queso & guacamole served with tortilla chips

Rustic Italian Bake | 15 NEW!
house-made meatballs baked in creamy marinara sauce & served with garlic bread

House-Made Guacamole | 14 NEW!
fresh avocado, onion, lime & salt served with tortilla chips

Shrimp Cocktail | 16 NEW!
served with cocktail sauce

Fried Mozzarella | 11
served with marinara

Bam Bam Shrimp | 13
crispy shrimp tossed in our signature bam bam sauce, garnished with peppers & green onions

Soft Pretzels | 12
lightly topped with garlic butter & salt with choice of dipping sauce

Pesto Hummus | 12 V
served with warm pita bread & an assortment of vegetables

Fajita Nachos | 16
tortilla chips, queso, fajita chicken, veggies, corn medley, fresh guacamole, pico de gallo & drizzled with jalapeño ranch

Southwest Eggrolls | 12
crispy tortillas filled with chicken & cheese & a blend of vegetables

Bam Bam Eggrolls | 15
crispy tortillas filled with our signature bam bam shrimp, pepper jack cheese & veggies

Buffalo Chicken Dip | 14
made in house topped with bleu cheese crumbles & served with tortilla chips

WINGS

Ely's Boneless "Wings"	Tara's Wings & Legs
5 for $9.50	5 for $9.50
10 for $15	10 for $15

DRY RUBS: *garlic parmesan, cajun, lemon pepper, buffalo lemon pepper*
SAUCES: *mild, medium, hot, atomic, BBQ, bam-bam, citrus lime sriracha, jamaican jerk, bbq sriracha, Nashville hot, garlic mild*

FLATBREADS

Shrimp Scampi Flatbread | 15
creamy scampi sauce, topped with mozzarella & fontina grilled shrimp, tomatoes & parsley

***Margherita Flatbread | 14** V
roasted tomatoes, mozzarella, basil & italian seasoning

Chipotle Chicken Flatbread | 15
queso, chicken, corn medley & chipotle mayo topped with avocado & jalapeño ranch

BBQ Chicken Flatbread | 15
signature BBQ sauce, grilled chicken, cheddar jack cheese, onions & cilantro topped with coleslaw

SALADS

DRESSING CHOICES: *caesar, ranch, signature bleu cheese, honey mustard, balsamic, low cal italian, 1000 island, fat free raspberry vinaigrette, spicy ranch, citrus-herb vinaigrette, jalapeño ranch & mediterranean vinaigrette.*
ADD *salmon, shrimp, steak or chicken to a salad for an additional charge.*

House V **| 11 whole 8 half**

Shrimp & Avocado Kale | 22
kale tossed in lemon parmesan dressing, crushed croutons, topped with grilled lemon pepper shrimp cherry tomatoes & fresh avocado

Chef | 18 GF
mixed greens, turkey, ham, swiss, cheddar, egg, cucumber & tomato

Candace's Cobb | 20 GF
mixed greens, egg, bacon, crumbled bleu cheese, avocado, tomatoes & grilled chicken

Spring | 18 whole 12 half GF
arcadian mix, dried cranberries, candied pecans, feta, grilled chicken & served with fat free raspberry vinaigrette

Our Signature | 18 whole 12 half GF
arcadian mix, strawberries, crumbled bleu cheese, candied pecans, grilled chicken & served with fat free raspberry vinaigrette

Super Food Kale | 16 GF, V
julienned broccoli, julienned carrots, apples, slivered brussels sprouts, chopped cabbage, chopped kale, pecans, dried cranberries, chicory & tossed in citrus-herb vinaigrette

Caesar | 11 whole 8 half

Mediterranean | 16 NEW!
mixed greens, cherry tomatoes, black olives, feta cheese, onions, cucumber & pepperoncinis served with Mediterranean dressing on the side

Little Broken Wedge | 15
iceberg lettuce, topped with our signature bleu cheese dressing, grape tomatoes, chopped peppered bacon, bleu cheese crumble, green onions & egg

Chopped Caprese | 20
romaine, fresh mozzarella, cherry tomatoes, avocado, grilled chicken, tossed in balsamic vinaigrette & topped with balsamic drizzle

Salmon & Spinach | 24 GF
spinach, sun-dried tomatoes, parmesan cheese, avocado, blackened salmon & tossed in citrus-herb vinaigrette

Chicken Tostada | 18
mixed greens, crispy corn tortilla strips, topped with blackened grilled chicken, corn medley, pico de gallo, avocado, cheddar cheese & tossed in spicy ranch

Waldorf Chicken | 18 GF
mixed greens, grapes, apples, candied pecans, celery, crumbled bleu cheese, grilled chicken & tossed in citrus -herb vinaigrette

ENTREES

All entrees served with a side salad

Prime Rib* | 35
14 oz slow roasted prime rib, served with au jus & baked potato -- *available after 4pm*

Steak Frites* | 24 NEW!
medium rare steak with house-made chimichurri, salted fries, and lemon parmesan salad

Sirloin Steak* | 26
8oz USDA choice center cut served with baked potato

Ribeye* | 33
14oz center cut , hand cut in house served with baked potato

Blackened Mango Salmon | 26 NEW!
blackened salmon served over a bed of cilantro rice topped with house-made mango salsa

Buffalo Mac & Cheese | 21
ziti pasta baked in our creamy buffalo chicken dip, topped mix cheese, fried buffalo chicken tenders, celery, bleu cheese crumbles & bread crumbs

Shrimp Linguini | 25
tossed in creamy lemon basil sauce, topped with blackened shrimp & sun-dried tomatoes

Pulled Pork Stuffed Potato | 19
loaded baked potato topped with hickory smoked pulled pork

Teriyaki Salmon | 26
served with wild rice & vegetables

Caribbean Chicken | 20
Caribbean glazed chicken breast topped with grilled pineapple, served with wild rice & vegetables

Fish & Chips | 18
fried, grilled, baked, or blackened, served with fries & coleslaw

Chicken Platter | 19 GF
grilled or blackened, served with baked potato

Roasted Red Pepper Pasta | 23
ziti pasta tossed in a red pepper sauce with cheese blend topped with blackened chicken

Fire Roasted Chicken | 20 GF
blackened, topped with feta cheese & roasted red pepper sauce over wild rice

Cajun Sausage Pasta | 21
ziti pasta tossed in cajun cream sauce, with sausage & mushrooms

Chicken Tenders | 18
grilled, fried or buffalo served with fries

Alfredo | 16 V
homemade traditional alfredo sauce or pesto sauce, mushrooms, sun-dried tomatoes & linguini pasta
add grilled or blackened chicken | 8
add shrimp | 9 add steak | 10 add salmon | 12

BOWLS

Teriyaki Chicken | 17
sautéed with broccoli & red pepper served over jasmine rice & garnished with carrots, sesame seeds & grilled pineapple slices

Firecracker Salmon | 19
baked salmon, julienned carrots, red peppers, cucumber, avocado & onion slaw over cilantro jasmine rice, drizzled with our signature bam-bam sauce & sriracha, garnished with sesame seeds & chives

Fiesta Lime Shrimp | 18
seasoned shrimp, fresh avocado salad, black beans, tortilla strips & corn medley over cilantro jasmine rice topped with a creamy cilantro-lime whip

Mediterranean Hummus | 15 V
cucumber, cherry tomatoes & onions topped with black olives & feta cheese served over jasmine rice with pesto hummus, garnished with pita bread
add shrimp, chicken or salmon for additional cost

GF - Gluten Free**
V - Vegetarian

PROUDLY SERVING Coca-Cola

*Consuming raw or undercooked meats, poultry, seafood, shellfish or eggs may increase your risk for food borne illness, especially if you have a medical condition. We do not guarentee the quality of any meat prepared above medium.

**Although our gluten-free menu items are made with ingredients that do not contain gluten, they are prepared in the same facility and kitchen as menu items that contain gluten. We cannot guarantee that menu items are 100% free of gluten as there is always a possibility of trace amounts crossing over from other kitchen areas.

***All items fried in beef tallow!

All menu items are made to order. Please let your server know about any dietary restrictions or allergies to best accommodate your needs!

***Automatic gratuity of 20% will be applied to parties of 8 or more.**

@JONATHANSGRILLE

EST. 1999

JONATHAN'S GRILLE

ORDER ONLINE

JONATHANSGRILLE.COM

SANDWICHES & BURGERS

Lettuce, tomato & onion available upon request. Served with chips or fries, substitute another side for $1 or side salad for $2.50

Turkey Burger | 17 NEW!
chipotle mayo, pepper-jack cheese, lettuce, tomato & pickle

Greek Wrap | 16 NEW!
pepperoncinis, black olives, cherry tomatoes, feta cheese, cucumber, onion & chilled chicken tossed in our signature greek dressing wrapped in a wheat tortilla

Thai Crunch Chicken Wrap | 15
our signature kale blend, baked chicken, chives, cilantro, basil, wonton strips & almonds tossed in Thai peanut sauce, wrapped in a wheat tortilla

JG Chicken Club Wrap | 15
grilled chicken, pepper-jack cheese, lettuce, onions, pineapple, creamy bacon jam wrapped in a wheat tortilla

Pimento BLT | 15
classic BLT, with spicy pimento cheese spread served on cranberry bread

Sante Fe Chicken Sandwich | 16
blackened grilled chicken, pepper jack, avocado, spicy ranch, lettuce, tomato & onion on jalapeño bread

The Perfect Prime | 19
shaved prime rib, cheddar cheese, creamy horseradish, grilled mushrooms, red onion, lettuce & tomato on jalapeño bread

Fish Sandwich | 17
fried, grilled, baked or blackened white fish, lettuce, tomato, onion & tartar sauce

The Zesty Turkey | 15
hot turkey, bacon, pepper jack cheese, lettuce, tomato & chipotle mayo on jalapeño bread

Melody's French Dip | 19
shaved prime rib, mozzarella & au jus

Philly | 19
choice of chicken or steak with grilled onions & peppers, mozzarella cheese & mayo

Black Bean Veggie Burger | 15 V
black bean patty, topped with house-made guacamole & pico de gallo, served with steamed veggies

Pulled BBQ Sandwich | 15
pork or chicken, served with pickle & garnished with coleslaw

Fiesta Wrap | 15
mixed greens, blackened grilled chicken, tortilla strips, cheddar cheese, avocado, corn medley, tossed in spicy ranch & wrapped in a jalapeño cheddar tortilla

Black & Bleu Smash Burger* | 18 NEW!
two signature patties topped with melted bleu cheese, bacon, lettuce & tomato topped with our signature bleu cheese dressing

The Baller Sub | 16 NEW!
house-made meatballs, marinara and provolone served on a toasted bun

Smash Burger* | 17
two signature patties topped with American cheese & creamy bacon jam

Cowboy Smash Burger* | 19
two signature patties topped with "Nashville Hot" bacon, grilled onions, fresh jalapeno, pepper jack cheese & spicy BBQ

Hot Bacon Cheese Burger* | 17
"Nashville Hot" bacon, spicy pimento cheese spread, lettuce, tomato & pickle

Bistro Burger* | 17
pepper jack cheese, bacon, a vidalia onion ring & spicy ranch

Bison Burger* | 18
seasoned bison burger, swiss cheese, topped with avocado

The Hangover Burger* | 17
bacon, fried egg & american cheese

Chicken Caprese Sandwich | 17
grilled chicken, pesto, fresh mozzarella & tomato topped with fresh basil & balsamic drizzle, served on sourdough bread

The Larry Bird | 15
fried chicken, swiss, bacon & 1000 island

Godfather | 16
provolone, ham, pepperoni, italian sausage, creamy italian, lettuce, tomato & onion

California Club | 17
turkey, ham, bacon, cheddar, lettuce, tomato, pesto mayo & avocado on toasted sourdough bread

The Avocado Club | 17
grilled chicken, bacon, avocado, tomato, swiss & pesto mayo on cranberry bread

The Horseshoe* | 17
sourdough bread below a cheeseburger, smothered in queso, topped with fries, tomatoes & scallions
add jalapeños & chili | 2

TACOS & QUESADILLAS

Salmon Tango Tacos | 18 NEW!
green cabbage, baked salmon & house-made cilantro-lime whip topped with fresh mango salsa

Baja Fish Tacos | 17
trio of soft shell tacos, blackened fish with avocado, red cabbage slaw & jalapeño ranch

Spicy Chicken Tacos | 15
trio of soft shell tacos with zesty chicken, spicy ranch, lettuce & tomatoes

Bam Bam Tacos | 16
trio of soft shell tacos with our signature bam bam shrimp, lettuce & tomatoes

Fajitas | 18
choice of chicken, shrimp or steak with peppers, onions, cheese, salsa & sour cream, served with tortillas or lettuce wraps
choice of two | 21 **choice of three | 25**

Chicken Quesadilla | 15
tomatoes, cheese, sour cream & salsa

Nikki's Quesadilla | 17
chicken, spinach, mushrooms, tomatoes, cheese, salsa & sour cream

SOUPS

Bowl | 9
Cup | 7
Soup of the Day
French Onion
Chili

SIDES | 6

French Fries
Sweet Potato Fries
Onion Rings
Vegetables
Broccoli
Fresh Fruit
Sautéed Cauliflower
Coleslaw
Brussels Sprouts
Baked Potato
Sweet Potato
Rice *White or Wild*
Chips

PIZZAS

TOPPINGS: *mushrooms, green peppers, red peppers, black olives, green olives, onions, tomatoes, pineapple, jalapeño, cilantro*
PREMIUM TOPPINGS: *chicken, bacon, shrimp, feta cheese, garlic, pesto, fresh basil, spinach, sun-dried tomatoes, artichoke, pepperoni, sausage, hamburger, ham, fresh mozzarella, fontina cheese, pork picada*
CRUSTS: *classic, thin, cauliflower GF, V*

Garden Pizza V
8" | 15 12" | 19 GF | 23
pesto or red sauce, green peppers, mushrooms, onions, garlic, tomatoes & black olives

Buffalo Chicken
8" | 14 12" | 18 GF | 22
hot buffalo sauce, spicy chicken, mozzarella & bacon

Mason's Topless Cheese V
8" | 11 12" | 14 GF | 18
just cheese, or create your own

Barbecue Pizza
8" | 14 12" | 18 GF | 22
barbeque chicken, green peppers & onion

Hawaiian Pizza
8" | 14 12" | 18 GF | 22
ham & pineapple

The Cajun Pepperoni
8" | 13 12" | 17 GF | 21

Pepperoni, Mushroom & Sausage
8" | 15 12" | 19 GF | 23

The Greek V
8" | 15 12" | 19 GF | 23
creamy italian, mozzarella, artichokes, mushrooms, onion, green peppers, black olives, sun-dried tomatoes & feta

Chicken Ranch
8" | 14 12" | 18 GF 12" | 22
chicken, onion, garlic, bacon, tomato & cheese with ranch dressing

Jamaican Jerk
8" | 14 12" | 18 GF | 22
caribbean jerk sauce, chicken, sun dried tomatoes, mozzarella & onion topped with jerk seasoning

The Works
12" | 20 GF | 24
pepperoni, sausage, hamburger, green peppers, mushrooms, onions & black olives

Margherita Pizza V
8" | 14 12" | 18 GF | 22
roasted tomatoes, fresh mozzarella, pesto & fresh basil

White Pizza V
8" | 13 12" | 17 GF | 21
fontina cheese, olive oil, & fresh basil

The Carnivore
12" | 20 GF | 24
pepperoni, sausage, ham, bacon & hamburger

DESSERTS

Cookie Skillet | 16
warm cookie skillet topped with vanilla ice cream

Chocolate Cake | 15
multi layer dark & milk chocolate

Pecan Cheese Cake | 16 NEW!

Traditional Cheese Cake | 14

Cinnamon Pretzels | 13
tossed in cinnamon sugar, caramel drizzle & served with side of honey butter

GF - Gluten Free**
V - Vegetarian

PROUDLY SERVING Coca-Cola

*Consuming raw or undercooked meats, poultry, seafood, shellfish or eggs may increase your risk for food borne illness, especially if you have a medical condition. We do not guarantee the quality of any meal prepared above medium.

**Although our gluten-free menu items are made with ingredients that do not contain gluten, they are prepared in the same facility and kitchen as menu items that contain gluten. We cannot guarantee that menu items are 100% free of gluten as there is always a possibility of trace amounts crossing over from other kitchen areas.

***All items fried in beef tallow!

All menu items are made to order. Please let your server know about any dietary restrictions or allergies to best accommodate your needs!

****Automatic gratuity of 20% will be applied to parties of 8 or more.**

SECTION 1: SPECIFICATION INFORMATION

ES-4000 SERIES SPECIFICATIONS

	ES-4000 Standard Cycle	ES-4000 Fast Cycle Option
Total Cycle Time	90 seconds	76 seconds
Wash Time	40seonds	35 seconds
Rinse Time	25seconds	20 seconds
Racks per Hour	80	94
Water Consumption per Cycle (minimum)	3.00 gallons	3.06gallons
Water Consumption per Hour	120 gallons	144 gallons
Temperatures		
Wash (minimum)	120 ° F	120 ° F
Rinse (minimum)	120 ° F	120 ° F
Incoming Water (minimum)	120 ° F	120 ° F
Incoming Water (recommended)	140 ° F	140 ° F

SANITIZING RINSE SOLUTION	50 PPM CHLORINE MINIMUM
PLUMBING REQUIREMENTS	
WATER LINE SIZE	3/4"
FLOW PRESSURE	15-25 PSI
DRAIN LINE SIZE	2"
ELECTRICAL REQUIREMENTS	
WASH PUMP MOTORS (2)	3/4 HP EACH
VOLTAGE	115
FREQUENCY	60 HZ
PHASE	1
TOTAL AMPERAGE	23.0
TYPICAL ELECTRICAL CIRCUIT	30 AMP

NOTE: Typical Electrical Circuit is based upon (1) 125% of the full amperage load of the machine and (2) typical fixed-trip circuit breaker sizes as listed in the NEC 2002 Edition. Local codes may require more stringent protection than what is displayed here. Always verify with your electrical service contractor that your circuit protection is adequate and meets all applicable national and local codes. These numbers are provided in this manual simply for reference and may change without notice at any given time.

NOTE: Always refer to the machine data plate for specific electrical and water requirements. The material provided on this page is for reference only and may be subject to change without notice.

SECTION 1: SPECIFICATION INFORMATION

DIMENSIONS ES-4000/ES-4000XSP

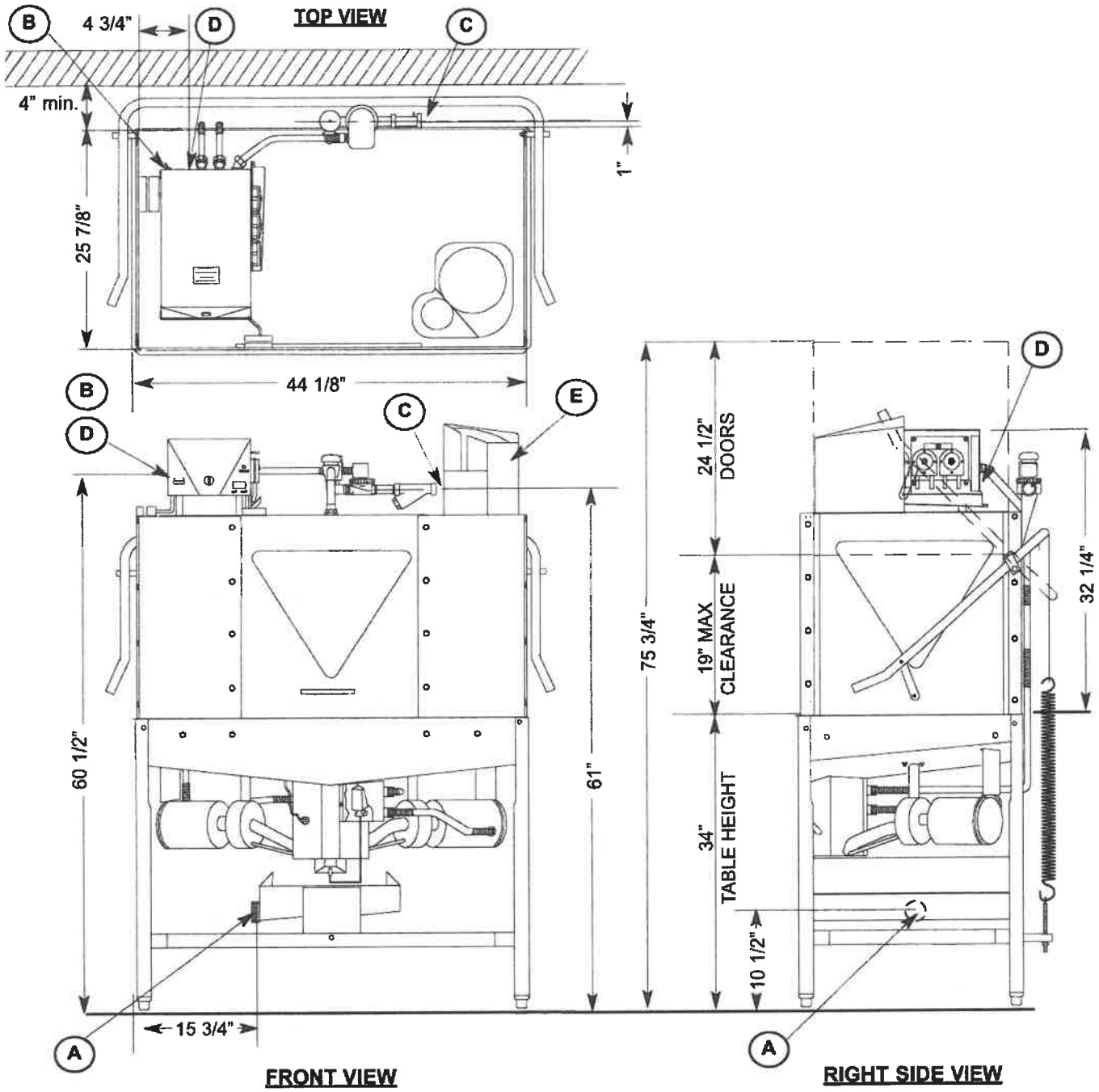

A - DRAIN CONNECTION - 2" NPT
B - ELECTRICAL CONNECTION
C - WATER INLET - 3/4" NPT
D - SERVICE DISCONNECT SWITCH
E - XSP DISPENSER

ALL DIMENSION FROM FLOOR ARE ADJUSTABLE +/- 1/2" DUE TO BULLET FEET.

TABLE DIMENSIONS

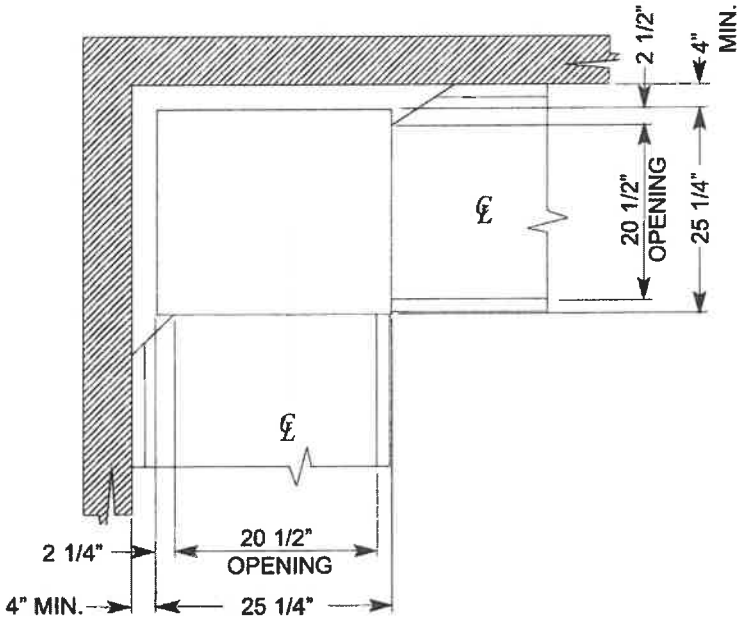

TABLE DIMENSIONS
CORNER INSTALLATION

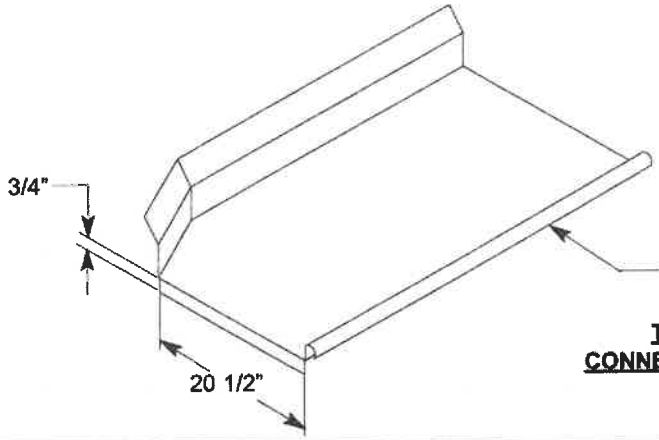

TABLE DIMENSIONS
CONNECTION TO DISHMACHINE

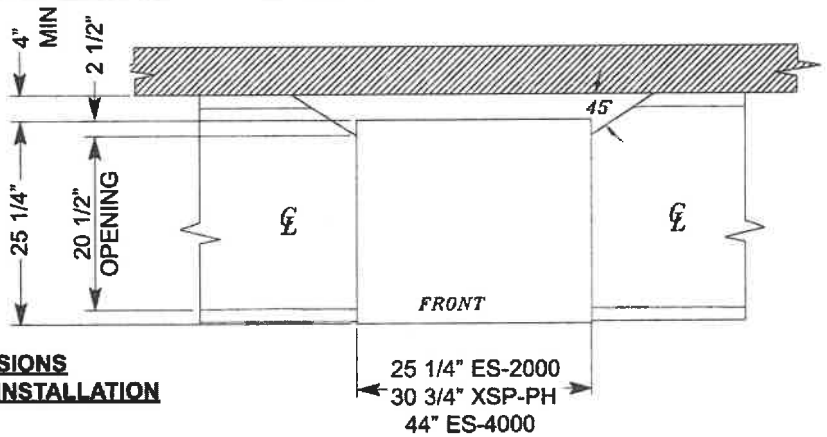

TABLE DIMENSIONS
STRAIGHT THROUGH INSTALLATION

Quote

05/13/2026

Project:
JONATHAN'S GRILLE Smyrna

From:
Supplies on the Fly
Thomas Ross
222 Chastain Meadows Ct Suite 200
Kennesaw, GA 30144-7029
866-792-4793

Job Reference Number: 176370

Item	Qty	Description
1	1 ea	**RANGE, 36", 6 OPEN BURNERS**
		Vulcan Model No. 36C-6BN Endurance™ Restaurant Range, natural gas, 36", (6) 30,000 BTU burners, lift-off burner heads, convection oven, stainless steel front, sides, backriser & lift-off high shelf, fully MIG welded chassis, 6" adjustable legs, 215,000 BTU, CSA, NSF
	1 ea	1 year limited parts & labor warranty, standard
	1 ea	115v/60/1-ph, cord & plug, standard
	1 ea	Stainless steel backriser & lift-off high shelf, standard
	1 ea	Stainless steel backriser & lift-off high shelf, standard
	1 ea	CASTERS-RR4 Casters, 5" (set of 4) (2 with locks)
2	1 ea	**CHARBROILER, GAS, COUNTERTOP**
		Vulcan Model No. VACB36-QS-PLATINUM (Quick Ship) Achiever Charbroiler, countertop, 36", (6) 17,000 BTU cast iron burners, infinite heat control valves, fully welded chassis, (1) drip tray, stainless steel front, sides & top trim, backsplash & grease trough, 4" adjustable legs, 102,000 BTU, CSA, NSF
	1 ea	1 year limited parts & labor warranty, standard
	1 ea	Natural gas (specify elevation if over 2,000 ft.)
3	1 ea	**GRIDDLE, GAS, COUNTERTOP**
		Royal Range of California Model No. RDMG-36-D Delux Series, Griddle, countertop, gas, 36" W x 30" D cooking surface, 1" thick polished steel griddle plate, manual controls, 4" grease trough, stainless steel splashguards, sides & front valve cover, all welded frame with 1,200° mineral wool insulation, 4" legs, 90,000 BTU, cETLus
	1 ea	Limited two-year parts and one-year labor warranty, lifetime frame warranty, standard
	1 ea	Natural gas (Must specify elevation if over 2000 ft)

Item	Qty	Description
4	1 ea	**GRIDDLE, GAS, COUNTERTOP**
		Royal Range of California Model No. RDMG-24-D Delux Series, Griddle, countertop, gas, 24" W x 30" D cooking surface, 1" thick polished steel griddle plate, manual controls, 4" grease trough, stainless steel splashguards, sides & front valve cover, all welded frame with 1,200° mineral wool insulation, 4" legs, 60,000 BTU, cETLus
	1 ea	Limited two-year parts and one-year labor warranty, lifetime frame warranty, standard
	1 ea	Natural gas (Must specify elevation if over 2000 ft)
5	1 ea	**EQUIPMENT STAND, REFRIGERATED BASE**
		Delfield Model No. F2996CP Refrigerated Low-Profile Equipment Stand, 96-1/4"W x 31-47/50"D x 24"H, three-section, (6) drawers (pans not included), marine edge stainless steel top & drawer fronts, front non-spill edge, ABS interior sides, 4" casters, side-mounted refrigeration system with electric condensate evaporator, R290 Hydrocarbon refrigerant, 1/4 hp, cUL, UL, NSF
	1 ea	0460003N 3 year parts & labor warranty, standard
	1 ea	W00007AN 7 year compressor warranty, standard
	1 ea	115v/60/1-ph, 4.8 amps, NEMA 5-15P, standard
	1 ea	Full perimeter marine edge, standard
	1 ea	Compressor on right, standard
	1 st	1027I 6" Casters in lieu of standard 4" casters
6	3 ea	**GAS FLOOR FRYER**
		Pitco Frialator (Middleby) Model No. SG14-S (QUICK SHIP) (MIDDLEBY ESSENTIALS ITEM) Essentials Fryer, Solstice™ Fryer, gas, floor model, full frypot, 40-50 lb. oil capacity, millivolt control ONLY, includes drain line cleanout rod & drain extension, stainless steel tank, front, door & sides, 110,000 BTU, NSF, CE, CSA Flame, CSA Star, AuGA (free standing, stand alone only fryer - special price) (Cannot be configured for use with other controllers, accessories or options) (Ships within 1-2 days)
	3 ea	Quick Ship items have limited configurations & that standard configuration may not apply. Contact factory for details
	3 ea	1 year parts and labor warranty from the date of installation up to a maximum of 15 months from the date of manufacture (with appropriate documentation), standard
	1 ea	Natural gas
	3 ea	P6072145 Basket, (2) oblong/twin size, 13-1/2" x 6-1/2" x 5-3/4" deep, long handle, regular mesh (shipped std (n/c) with models "T" SG14, SG14R, SSH55, SE14, SE14X, SE14B, SG14T, 35+, 45+, fryer batteries shipped with (1) per fryer
	3 st	B3901504 Casters, 9" adjustable swivel (set of 4) non-lock rear & lock front casters, solstice supreme, SG, SE, VF and flat bottom fryers, pasta cookers, rethermalizers, BNB

Item	Qty	Description
7	7 kt	**SAFETY SYSTEM MOVEABLE GAS CONNECTOR**  Dormont Manufacturing Model No. 1675KIT48 Packed 1 kt Dormont Blue Hose™ Moveable Gas Connector Kit, 3/4" inside dia., 48" long, covered with stainless steel braid, coated with blue antimicrobial PVC, (1) SnapFast® QD, (1) full port valve, (2) 90° elbows, coiled restraining cable with hardware, 180,000 BTU/hr minimum flow capacity, limited lifetime warranty

****Pricing valid for 14 days from time of quote; provided, however, that Sysco Corporation and its affiliated entities (collectively, "Sysco") reserve the right to adjust pricing at any time to reflect the impact of tariffs, duties, or similar governmental charges imposed after the date of this proposal. Any such adjustments will be calculated in good faith to ensure fair allocation of the increased costs. We will provide notice of any such adjustments along with documentation supporting the adjustment.** Gas Equipment Must be Notated if your location is above 2000 Feet Elevation. Please make your sales associate aware if you are above 2000 Feet.**

This bid is based on our understanding of the information furnished to us. While we make every effort to ensure that the bid is correct, it is ultimately the customer's responsibility to check the bid for errors.

NOTE: INSPECT ALL PACKAGES FOR DAMAGE BEFORE ACCEPTING DELIVERY OF THE PACKAGE AS FREIGHT CARRIERS WILL NOT ACCEPT DAMAGE CLAIMS AND NO CREDIT WILL BE GIVEN AFTER DELIVERY HAS BEEN ACCEPTED. IF FREIGHT DAMAGE IS NOTICED PLEASE REFUSE THE DELIVERY AND NOTIFY YOUR SYSCO SALES CONSULTANT.

Imperative – You must KEEP the original packaging and pallets until you are certain that you do not wish to return this unit and it has been inspected fully for damage. Manufacturers will not accept a return which is not in original packaging and affixed to a pallet to prevent damage during the return shipping process. If these instructions are not followed, we will be unable to issue a FULL credit.

At Sysco, we strive to provide you with the highest quality products. All orders are subject to a 25% restocking fee. Please note that shipping and handling fees are not refundable. If you received an item in error, we'll gladly pay for the return shipping cost and waive the restocking fee. All returns must be properly packed and the returned product and equipment must be in new, unused condition and must be in its original packaging. All returns will be inspected for damage or usage prior to issuance of a credit or refund.

A: The Merchandise listed on the foregoing quote is not carried in our regular stock. SPECIAL ORDERS ARE NOT SUBJECT TO CANCELLATION, AND MERCHANDISE CANNOT BE RETURNED UNLESS DEFECTIVE. Sales taxes are not included in prices shown. Submittal of this order does not constitute an agreement to sell until accepted by Sysco's E&S Bid Team, unless otherwise so stated above. ALL PRICES QUOTED ARE SUBJECT TO CHANGE WITH OUT NOTICE.

1. THERE ARE NO EXPRESS OR IMPLIED WARRANTIES OF MERCHANTABILTY OR OF FITNESS ON THE PART OF SYSCO UNLESS OTHERWISE STATED HEREIN. SYSCO NOT RESPONSIBLE FOR ANY OR ALL WARRANTY CLAIMS, ALL WARRANTIES ARE BY FACTORY AUTHORIZED AGENTS ONLY

2. Equipment carries standard factory warranties only, and does not include labor costs or transportation costs on any defective parts replacement. It is the responsibility of the customer to submit for approval to all local, State and Federal agencies all installation and equipment specifications. Sysco is not responsible for acquiring any approvals or licenses.

3. Items do not include delivery charges unless otherwise stated. IF FREIGHT IS QUOTED IT IS AN ESTIMATE ONLY AND MAY VARY FROM ACTUAL FREIGHT BILLED. All deliveries are curbside delivery with lift gate within normal business hours, without a delivery appointment, not street level or uncrated, set in place or otherwise installed in any way. Necessary parts for mechanical or electrical connections from rough ins to equipment or labor for installation or final hook-up are not included. Buyer is responsible for making certain that your premises provide the proper electrical and or gas supply that plumbing lines are properly sized, and the doors and passage ways will accommodate the equipment.

4. No trade-ins are considered, and no allowance will be made for any trade-in.

5. Sysco DOES NOT ASSUME RESPONSIBILITY FOR UNAVOIDABLE DELAYS IN MANFACTURING OR TRANSIT OR LOSS OR DAMAGE IN TRANSIT.

6. I UNDERSTAND THE MERCHANDISE LISTED ABOVE IS NOT CARRIED IN THE SYSCO REGULAR STOCK. THEREFORE THE ORDER CANNOT BE CANCELLED BY ME OR RETURNED TO SYSCO FOR CREDIT.

Signature_____

7. It is the responsibility of the customer accepting a direct shipment to note any visible damage on the freight bill AT THE TIME OF DELIVERY. Concealed damage must be REPORTED TO THE FREIGHT LINE. In the event of such damage, it is the CUSTOMER'S RESPONSIBILITY to file a freight claim with the carrier involved within 24 hours.

Signature_____

8. Factory direct orders may have production over runs resulting in the cost of and product being added to the order.

9. If less than factory case lots or below factory minimum orders are placed there will be a broken case charge and minimum order charge applied to order.

10. Finance options are available through our partner - Time Payment. Click the button to get a free quote, or ask your sales associate for more information.

Get Quote

11. All orders are subject to Sysco credit approval – a deposit or a UCC filing may be required – please check with your Sysco Sales Consultant.

12. PLEASE NOTE THAT TAXES ON THIS BID ARE ESTIMATED AND THE EXACT LOCAL AND STATE TAXES WILL BE CALCULATED ON THE FINAL INVOICE FROM YOUR LOCAL SYSCO HOUSE.

- - - Security Agreement - - -

To secure payment and performance of all obligations, Customer (identified above) hereby grants Creditor (identified above) a continuing security interest in all inventory, equipment, and goods manufactured by or distributed by Creditor, whenever sold, consigned, leased, rented or delivered, directly or indirectly, to or for the benefit of Customer by Creditor, wherever located, now owned and hereafter acquired including but not limited to all equipment described within this Agreement; and all replacement parts, accessories and supplies including repossessions and returns; and all proceeds from the sale, lease or rental thereof; and all existing or subsequently arising accounts and accounts receivables, goods, instruments, chattel paper, general intangibles and supporting obligations which may from time to time hereafter come into existence during the term of this Security Agreement. Creditor's security interest is explicitly limited to outstanding obligations between Creditor and Customer. Customer will maintain the Collateral in original condition but for the ordinary wear and tear, and will insure the Collateral against all expected risks. Customer will not subject the Collateral to any adverse encumbrance or lien, or sale or other transfer other than as approved in writing by Creditor including through this Agreement. If Customer fails to timely make any payment, Creditor may repossess and remove any Collateral from Customer with or without Notice. Customer will not locate the Collateral at any location other than as known to Creditor. Customer will promptly advise Creditor of any change of Customer's name or business nature, location, and business openings and closings. The following constitute Customer defaults: Non-payment in timely fashion of Customer's indebtedness to Creditor, Customer's noncompliance with any obligation of this Agreement, bankruptcy, insolvency, or assignment for the benefit of creditors; misrepresentation in respect of any provision of this or any Agreement between Creditor and Customer. In the event of default, Creditor may declare all unpaid balances due and payable and/or may require Customer to assemble the Collateral and make it available to allow Creditor to take possession or dispose of the collateral. Customer authorizes Creditor to file a financing statement describing the Collateral and grants Creditor a limited Power of Attorney to sign any forms/document deemed necessary by Creditor to protect Creditor's interest. By signature on this document, Customer's representative represents and warrants that he/she has the authority to bind Customer as set forth herein.

Acceptance: _____

Date: _____

Printed Name: _____

Acceptance: _____ Date: _____

Printed Name: _____

Project Grand Total:

Don ON Sysco | Shop

Quote

05/13/2026

Project:
Jonathan's Grill Smyrna Ice Maker

From:
Supplies on the Fly
Thomas Ross
222 Chastain Meadows Ct Suite 200
Kennesaw, GA 30144-7029
866-792-4793

Job Reference Number: 156673

Item	Qty	Description
1	2 ea	**ICE MAKER, CUBE-STYLE**
		Hoshizaki Model No. KM-1340MRJZ Ice Maker, Cube-Style, 30"W, air-cooled, remote condenser (priced separately), production capacity up to 1371 lb/24 hours at 70°/50° (1177 lb AHRI certified at 90°/70°), stainless steel finish, crescent cube style, R-404A refrigerant, 208-230v/60/1-ph, 14.0 amps, NSF, UL (always pair "Z" model ice machines with "Z" model remote condenser)
	2 ea	Warranty: 3-Year parts & labor on entire machine
	2 ea	Warranty: 5-Year parts & labor on evaporator
	2 ea	NOTE: If neutral not available, transformer kit HS-5030 is required. Refer to instruction manual for installation and electrical requirements.
	2 ea	URC-14FZ Remote Condenser, R-404A refrigerant, crossing legs, 115V/60/1, cULus (always pair "Z" model ice machines with "Z" model remote condenser)
	2 ea	Warranty: 5-Year parts on air-cooled condenser
	2 kt	HS-5606 Tubing Kit, 55 ft, brazing required, for URC-9FZ & URC-14FZ remote condenser (line sets require refrigerant)
	1 ea	B-1500SS Ice Bin, 60"W, hinged bottom door & top view windows, 1500-lb ice storage capacity, for top-mounted ice maker, stainless steel construction, universal top included, stainless steel legs, protected with H-GUARD Plus Antimicrobial Agent, ETL, ETL-Sanitation
	2 ea	Warranty: 5-Year parts & labor for bin
	2 ea	Universal top kit included
	2 ea	HS-2111 Stainless Cover/Separator, 11.3" x 26.2"

****Pricing valid for 14 days from time of quote; provided, however, that Sysco Corporation and its affiliated entities (collectively, "Sysco") reserve the right to adjust pricing at any time to reflect the impact of tariffs, duties, or similar governmental charges imposed after the date of this proposal. Any such adjustments will be calculated in good faith to ensure fair allocation of the increased costs. We will provide notice of any such adjustments along with documentation supporting the adjustment.** Gas Equipment Must be Notated if your location is above 2000 Feet Elevation. Please make your sales associate aware if you are above 2000 Feet.**

This bid is based on our understanding of the information furnished to us. While we make every effort to ensure that the bid is correct, it is ultimately the customer's responsibility to check the bid for errors.

NOTE: INSPECT ALL PACKAGES FOR DAMAGE BEFORE ACCEPTING DELIVERY OF THE PACKAGE AS FREIGHT CARRIERS WILL NOT ACCEPT DAMAGE CLAIMS AND NO CREDIT WILL BE GIVEN AFTER DELIVERY HAS BEEN ACCEPTED. IF FREIGHT DAMAGE IS NOTICED PLEASE REFUSE THE DELIVERY AND NOTIFY YOUR SYSCO SALES CONSULTANT.

Imperative – You must KEEP the original packaging and pallets until you are certain that you do not wish to return this unit and it has been inspected fully for damage. Manufacturers will not accept a return which is not in original packaging and affixed to a pallet to prevent damage during the return shipping process. If these instructions are not followed, we will be unable to issue a FULL credit.

At Sysco, we strive to provide you with the highest quality products. All orders are subject to a 25% restocking fee. Please note that shipping and handling fees are not refundable. If you received an item in error, we'll gladly pay for the return shipping cost and waive the restocking fee. All returns must be properly packed and the returned product and equipment must be in new, unused condition and must be in its original packaging. All returns will be inspected for damage or usage prior to issuance of a credit or refund.

A: The Merchandise listed on the foregoing quote is not carried in our regular stock. SPECIAL ORDERS ARE NOT SUBJECT TO CANCELLATION, AND MERCHANDISE CANNOT BE RETURNED UNLESS DEFECTIVE. Sales taxes are not included in prices shown. Submittal of this order does not constitute an agreement to sell until accepted by Sysco's E&S Bid Team, unless otherwise so stated above. ALL PRICES QUOTED ARE SUBJECT TO CHANGE WITH OUT NOTICE.

1. THERE ARE NO EXPRESS OR IMPLIED WARRANTIES OF MERCHANTABILTY OR OF FITNESS ON THE PART OF SYSCO UNLESS OTHERWISE STATED HEREIN. SYSCO NOT RESPONSIBLE FOR ANY OR ALL WARRANTY CLAIMS, ALL WARRANTIES ARE BY FACTORY AUTHORIZED AGENTS ONLY

2. Equipment carries standard factory warranties only, and does not include labor costs or transportation costs on any defective parts replacement. It is the responsibility of the customer to submit for approval to all local, State and Federal agencies all installation and equipment specifications. Sysco is not responsible for acquiring any approvals or licenses.

3. Items do not include delivery charges unless otherwise stated. IF FREIGHT IS QUOTED IT IS AN ESTIMATE ONLY AND MAY VARY FROM ACTUAL FREIGHT BILLED. All deliveries are curbside delivery with lift gate within normal business hours, without a delivery appointment, not street level or uncrated, set in place or otherwise installed in any way. Necessary parts for mechanical or electrical connections from rough ins to equipment or labor for installation or final hook-up are not included. Buyer is responsible for making certain that your premises provide the proper electrical and or gas supply that plumbing lines are properly sized, and the doors and passage ways will accommodate the equipment.

4. No trade-ins are considered, and no allowance will be made for any trade-in.

5. Sysco DOES NOT ASSUME RESPONSIBILITY FOR UNAVOIDABLE DELAYS IN MANFACTURING OR TRANSIT OR LOSS OR DAMAGE IN TRANSIT.

6. I UNDERSTAND THE MERCHANDISE LISTED ABOVE IS NOT CARRIED IN THE SYSCO REGULAR STOCK. THEREFORE THE ORDER CANNOT BE CANCELLED BY ME OR RETURNED TO SYSCO FOR CREDIT.

Signature_____

7. It is the responsibility of the customer accepting a direct shipment to note any visible damage on the freight bill AT THE TIME OF DELIVERY. Concealed damage must be REPORTED TO THE FREIGHT LINE. In the event of such damage, it is the CUSTOMER'S RESPONSIBILITY to file a freight claim with the carrier involved within 24 hours.

Signature_____

8. Factory direct orders may have production over runs resulting in the cost of and product being added to the order.

9. If less than factory case lots or below factory minimum orders are placed there will be a broken case charge and minimum order charge applied to order.

10. Finance options are available through our partner - Time Payment. Click the button to get a free quote, or ask your sales associate for more information.

Get Quote

11. All orders are subject to Sysco credit approval – a deposit or a UCC filing may be required – please check with your Sysco Sales Consultant.

12. PLEASE NOTE THAT TAXES ON THIS BID ARE ESTIMATED AND THE EXACT LOCAL AND STATE TAXES WILL BE CALCULATED ON THE FINAL INVOICE FROM YOUR LOCAL SYSCO HOUSE.

- - - Security Agreement - - -

To secure payment and performance of all obligations, Customer (identified above) hereby grants Creditor (identified above) a continuing security interest in all inventory, equipment, and goods manufactured by or distributed by Creditor, whenever sold, consigned, leased, rented or delivered, directly or indirectly, to or for the benefit of Customer by Creditor, wherever located, now owned and hereafter acquired including but not limited to all equipment described within this Agreement; and all replacement parts, accessories and supplies including repossessions and returns; and all proceeds from the sale, lease or rental thereof; and all existing or subsequently arising accounts and accounts receivables, goods, instruments, chattel paper, general intangibles and supporting obligations which may from time to time hereafter come into existence during the term of this Security Agreement. Creditor's security interest is explicitly limited to outstanding obligations between Creditor and Customer. Customer will maintain the Collateral in original condition but for the ordinary wear and tear, and will insure the Collateral against all expected risks. Customer will not subject the Collateral to any adverse encumbrance or lien, or sale or other transfer other than as approved in writing by Creditor including through this Agreement. If Customer fails to timely make any payment, Creditor may repossess and remove any Collateral from Customer with or without Notice. Customer will not locate the Collateral at any location other than as known to Creditor. Customer will promptly advise Creditor of any change of Customer's name or business nature, location, and business openings and closings. The following constitute Customer defaults: Non-payment in timely fashion of Customer's indebtedness to Creditor, Customer's noncompliance with any obligation of this Agreement, bankruptcy, insolvency, or assignment for the benefit of creditors; misrepresentation in respect of any provision of this or any Agreement between Creditor and Customer. In the event of default, Creditor may declare all unpaid balances due and payable and/or may require Customer to assemble the Collateral and make it available to allow Creditor to take possession or dispose of the collateral. Customer authorizes Creditor to file a financing statement describing the Collateral and grants Creditor a limited Power of Attorney to sign any forms/document deemed necessary by Creditor to protect Creditor's interest. By signature on this document, Customer's representative represents and warrants that he/she has the authority to bind Customer as set forth herein.

Acceptance: _____

Date: _____

Printed Name: _____

Acceptance: _____ Date: _____

Printed Name: _____

Project Grand Total:

DON ON Sysco | Shop

Quote

05/13/2026

Project:
JONATHAN'S GRILLE Smyrna
Continental

From:
Supplies on the Fly
Thomas Ross
222 Chastain Meadows Ct Suite 200
Kennesaw, GA 30144-7029
866-792-4793

Job Reference Number: 176372

Item	Qty	Description
1	1 ea	**REACH-IN FREEZER**
		Continental Refrigerator Model No. 1FNSSHD Freezer, reach-in, one-section, self-contained refrigeration, stainless steel exterior & interior, standard depth, half-height solid doors, electronic controller w/ digital display, electric condensate evaporator, 5" casters, ENERGY STAR®
	1 ea	Standard warranty (for the United States & Canada Only): 7 year parts, labor, and compressor
	1 ea	115v/60/1-ph, cord, NEMA 5-15P, standard
	1 ea	Door hinged on right, standard
	1 ea	5" Casters, standard
2	2 ea	**PIZZA PREPARATION REFRIGERATOR**
		Continental Refrigerator Model No. PA93N Pizza Prep Table, 93" wide, three-section, 32.0 cubic feet, forced air, #300 Series stainless steel work top with 19" poly cutting board, (3) full & (1) half height field rehingeable doors, stainless steel front and end panels, aluminum interior, electronic controller w/ digital display, 5" swivel casters, side-mounted refrigeration
	2 ea	Standard warranty (for the United States & Canada Only): 7 year parts, labor, and compressor
	2 ea	115v/60/1-ph, cord, NEMA 5-15P, standard
	2 ea	Condensing unit on the right, standard
	2 ea	Left & center door hinged left, right door & door above the compressor hinged right, standard
	2 ea	Refrigerated drawer compartment, in lieu of door over the condensing unit compartment
	2 ea	Two drawers, each holds (2) 12 x 20 x 6 pans, in lieu of one full door (per door)
	2 ea	NOTE: Please specify location of drawers ***DRAWERS ON RIGHT SIDE OF THE UNIT NEXT TO COMPRESSOR***
	2 ea	5" Swivel Casters standard

Item	Qty	Description
2.1	1 ea	**PIZZA PREPARATION REFRIGERATOR** Continental Refrigerator Model No. PA93N Pizza Prep Table, 93" wide, three-section, 32.0 cubic feet, forced air, #300 Series stainless steel work top with 19" poly cutting board, (3) full & (1) half height field rehingeable doors, stainless steel front and end panels, aluminum interior, electronic controller w/ digital display, 5" swivel casters, side-mounted refrigeration
	1 ea	Standard warranty (for the United States & Canada Only): 7 year parts, labor, and compressor
	1 ea	115v/60/1-ph, cord, NEMA 5-15P, standard
	1 ea	Condensing unit on the right, standard
	1 ea	Left & center door hinged left, right door & door above the compressor hinged right, standard
	1 ea	5" Swivel Casters standard
3	1 ea	**PIZZA PREPARATION REFRIGERATOR** Continental Refrigerator Model No. PA68N Pizza Prep Table, 68" wide, two-section, 22.0 cubic feet, forced air, #300 Series stainless steel work top with 19" poly cutting board, (2) full & (1) half-height field rehingeable doors, stainless steel front and end panels, aluminum interior, electronic controller w/ digital display, 5" swivel casters, side-mounted refrigeration
	1 ea	Standard warranty (for the United States & Canada Only): 7 year parts, labor, and compressor
	1 ea	115v/60/1-ph, cord, NEMA 5-15P, standard
	1 ea	Condensing unit on the right, standard
	1 ea	Left door hinged left, right door hinged right, door above the compressor hinged right, standard
	1 ea	5" Swivel Casters standard

Merchandise
Freight

****Pricing valid for 14 days from time of quote; provided, however, that Sysco Corporation and its affiliated entities (collectively, "Sysco") reserve the right to adjust pricing at any time to reflect the impact of tariffs, duties, or similar governmental charges imposed after the date of this proposal. Any such adjustments will be calculated in good faith to ensure fair allocation of the increased costs. We will provide notice of any such adjustments along with documentation supporting the adjustment.** Gas Equipment Must be Notated if your location is above 2000 Feet Elevation. Please make your sales associate aware if you are above 2000 Feet.**

This bid is based on our understanding of the information furnished to us. While we make every effort to ensure that the bid is correct, it is ultimately the customer's responsibility to check the bid for errors.

NOTE: INSPECT ALL PACKAGES FOR DAMAGE BEFORE ACCEPTING DELIVERY OF THE PACKAGE AS FREIGHT CARRIERS WILL NOT ACCEPT DAMAGE CLAIMS AND NO CREDIT WILL BE GIVEN AFTER DELIVERY HAS BEEN ACCEPTED. IF FREIGHT DAMAGE IS NOTICED PLEASE REFUSE THE DELIVERY AND NOTIFY YOUR SYSCO SALES CONSULTANT.

Imperative – You must KEEP the original packaging and pallets until you are certain that you do not wish to return this unit and it has been inspected fully for damage. Manufacturers will not accept a return which is not in original packaging and affixed to a pallet to prevent damage during the return shipping process. If these instructions are not followed, we will be unable to issue a FULL credit.

At Sysco, we strive to provide you with the highest quality products. All orders are subject to a 25% restocking fee. Please note that shipping and handling fees are not refundable. If you received an item in error, we'll gladly pay for the return shipping cost and waive the restocking fee. All returns must be properly packed and the returned product and equipment must be in new, unused condition and must be in its original packaging. All returns will be inspected for damage or usage prior to issuance of a credit or refund.

A: The Merchandise listed on the foregoing quote is not carried in our regular stock. SPECIAL ORDERS ARE NOT SUBJECT TO CANCELLATION, AND MERCHANDISE CANNOT BE RETURNED UNLESS DEFECTIVE. Sales taxes are not included in prices shown. Submittal of this order does not constitute an agreement to sell until accepted by Sysco's E&S Bid Team, unless otherwise so stated above. ALL PRICES QUOTED ARE SUBJECT TO CHANGE WITH OUT NOTICE.

1. THERE ARE NO EXPRESS OR IMPLIED WARRANTIES OF MERCHANTABILTY OR OF FITNESS ON THE PART OF SYSCO UNLESS OTHERWISE STATED HEREIN. SYSCO NOT RESPONSIBLE FOR ANY OR ALL WARRANTY CLAIMS, ALL WARRANTIES ARE BY FACTORY AUTHORIZED AGENTS ONLY

2. Equipment carries standard factory warranties only, and does not include labor costs or transportation costs on any defective parts replacement. It is the responsibility of the customer to submit for approval to all local, State and Federal agencies all installation and equipment specifications. Sysco is not responsible for acquiring any approvals or licenses.

3. Items do not include delivery charges unless otherwise stated. IF FREIGHT IS QUOTED IT IS AN ESTIMATE ONLY AND MAY VARY FROM ACTUAL FREIGHT BILLED. All deliveries are curbside delivery with lift gate within normal business hours, without a delivery appointment, not street level or uncrated, set in place or otherwise installed in any way. Necessary parts for mechanical or electrical connections from rough ins to equipment or labor for installation or final hook-up are not included. Buyer is responsible for making certain that your premises provide the proper electrical and or gas supply that plumbing lines are properly sized, and the doors and passage ways will accommodate the equipment.

4. No trade-ins are considered, and no allowance will be made for any trade-in.

5. Sysco DOES NOT ASSUME RESPONSIBILITY FOR UNAVOIDABLE DELAYS IN MANFACTURING OR TRANSIT OR LOSS OR DAMAGE IN TRANSIT.

6. I UNDERSTAND THE MERCHANDISE LISTED ABOVE IS NOT CARRIED IN THE SYSCO REGULAR STOCK. THEREFORE THE ORDER CANNOT BE CANCELLED BY ME OR RETURNED TO SYSCO FOR CREDIT.

Signature_____

7. It is the responsibility of the customer accepting a direct shipment to note any visible damage on the freight bill AT THE TIME OF DELIVERY. Concealed damage must be REPORTED TO THE FREIGHT LINE. In the event of such damage, it is the CUSTOMER'S RESPONSIBILITY to file a freight claim with the carrier involved within 24 hours.

Signature_____

8. Factory direct orders may have production over runs resulting in the cost of and product being added to the order.

9. If less than factory case lots or below factory minimum orders are placed there will be a broken case charge and minimum order charge applied to order.

10. Finance options are available through our partner - Time Payment. Click the button to get a free quote, or ask your sales associate for more information.

Get Quote

11. All orders are subject to Sysco credit approval – a deposit or a UCC filing may be required – please check with your Sysco Sales Consultant.

12. PLEASE NOTE THAT TAXES ON THIS BID ARE ESTIMATED AND THE EXACT LOCAL AND STATE TAXES WILL BE CALCULATED ON THE FINAL INVOICE FROM YOUR LOCAL SYSCO HOUSE.

- - - Security Agreement - - -

To secure payment and performance of all obligations, Customer (identified above) hereby grants Creditor (identified above) a continuing security interest in all inventory, equipment, and goods manufactured by or distributed by Creditor, whenever sold, consigned, leased, rented or delivered, directly or indirectly, to or for the benefit of Customer by Creditor, wherever located, now owned and hereafter acquired including but not limited to all equipment described within this Agreement; and all replacement parts, accessories and supplies including repossessions and returns; and all proceeds from the sale, lease or rental thereof; and all existing or subsequently arising accounts and accounts receivables, goods, instruments, chattel paper, general intangibles and supporting obligations which may from time to time hereafter come into existence during the term of this Security Agreement. Creditor's security interest is explicitly limited to outstanding obligations between Creditor and Customer. Customer will maintain the Collateral in original condition but for the ordinary wear and tear, and will insure the Collateral against all expected risks. Customer will not subject the Collateral to any adverse encumbrance or lien, or sale or other transfer other than as approved in writing by Creditor including through this Agreement. If Customer fails to timely make any payment, Creditor may repossess and remove any Collateral from Customer with or without Notice. Customer will not locate the Collateral at any location other than as known to Creditor. Customer will promptly advise Creditor of any change of Customer's name or business nature, location, and business openings and closings. The following constitute Customer defaults: Non-payment in timely fashion of Customer's indebtedness to Creditor, Customer's noncompliance with any obligation of this Agreement, bankruptcy, insolvency, or assignment for the benefit of creditors; misrepresentation in respect of any provision of this or any Agreement between Creditor and Customer. In the event of default, Creditor may declare all unpaid balances due and payable and/or may require Customer to assemble the Collateral and make it available to allow Creditor to take possession or dispose of the collateral. Customer authorizes Creditor to file a financing statement describing the Collateral and grants Creditor a limited Power of Attorney to sign any forms/document deemed necessary by Creditor to protect Creditor's interest. By signature on this document, Customer's representative represents and warrants that he/she has the authority to bind Customer as set forth herein.

Acceptance: _____

Date: _____

Printed Name: _____

Acceptance: _____ Date: _____

Printed Name: _____

Project Grand Total:

Quote

05/13/2026

Project:
JONATHAN'S GRILLE Smyrna Furniture

From:
Supplies on the Fly
Thomas Ross
222 Chastain Meadows Ct Suite 200
Kennesaw, GA 30144-7029
866-792-4793

Job Reference Number: 156654

Item	Qty	Description
1	136 ea	**CHAIR**
		JustChair Manufacturing Model No. M27118-BLK-VS Side Chair, window back, veneer wood seat, welded 18 gauge steel frame with textured black powder coat finish, black nylon glides
	136 ea	5 year limited warranty against manufacturer defects
	136 ea	Standard finish (lead time 3-5 weeks)
	136 ea	Natural veneer finish
2	125 ea	**BAR STOOL**
		JustChair Manufacturing Model No. M27130-BLK-VS Bar Stool, window back, veneer wood seat, welded 18 gauge steel frame with textured black powder coat finish, foot rest, black nylon glides
	125 ea	5 year limited warranty against manufacturer defects
	125 ea	Standard finish (lead time 3-5 weeks)
	125 ea	Natural veneer finish
	125 ea	Wood finish to be specified
3	42 ea	**METAL TABLE BASE**
		Flash Furniture Model No. XU-T3030-GG Table Base, 30" x 30" x 30"H, dining height, x-base, 3" dia. column, pre-welded top plate, fits 24" to 36" round/square table tops, designed for commercial use, cast iron, powder coated finish, black (assembly required) (shipped in 2 boxes) (in stock items usually ship within 24 hours)
4	21 ea	**METAL TABLE BASE**
		Flash Furniture Model No. XU-T3030-BAR-GG Table Base, 30" x 30" x 42"H, bar height, x-base, 3" dia. column, pre-welded top plate, fits 24" to 36" round/square table tops, designed for commercial use, cast iron, powder coated finish, black (assembly required) (shipped in 2 boxes) (in stock items usually ship within 24 hours)

Item	Qty	Description
5	34 ea	**TABLETOP, 30" X 48", RECTANGULAR, NATURAL GRANITE WITH 3/4" PLYWOOD CORE, 1-1/4" THICK BULLNOSE EDGE, FOR INDOOR/OUTDOOR USE, HIGH TEMP/WATERPROOF FIBERGLASS AND EPOXY BACKING, UBA TUBA** Art Marble Furniture Model No. G203 30X48 Tabletop, 30" x 48", rectangular, natural granite with 3/4" plywood core, 1-1/4" thick bullnose edge, for indoor/outdoor use, high temp/waterproof fiberglass and epoxy backing, Uba Tuba (2-5 days lead time)
6	12 ea	**TABLETOP, 36" X 36", RECTANGULAR, NATURAL GRANITE WITH 3/4" PLYWOOD CORE, 1-1/4" THICK BULLNOSE EDGE, FOR INDOOR/OUTDOOR USE, HIGH TEMP/WATERPROOF FIBERGLASS AND EPOXY BACKING, UBA TUBA** Art Marble Furniture Model No. G203 36X36 Tabletop, 36" x 36"', rectangular, natural granite with 3/4" plywood core, 1-1/4" thick bullnose edge, for indoor/outdoor use, high temp/waterproof fiberglass and epoxy backing, Uba Tuba (2-5 days lead time)
7	8 ea	**TABLETOP, 30" X 72", RECTANGULAR, NATURAL GRANITE WITH 3/4" PLYWOOD CORE, 1-1/4" THICK BULLNOSE EDGE, FOR INDOOR/OUTDOOR USE, HIGH TEMP/WATERPROOF FIBERGLASS AND EPOXY BACKING, UBA TUBA** Art Marble Furniture Model No. G203 30X72 Tabletop, 30" x 72", rectangular, natural granite with 3/4" plywood core, 1-1/4" thick bullnose edge, for indoor/outdoor use, high temp/waterproof fiberglass and epoxy backing, Uba Tuba (2-5 days lead time)

****Pricing valid for 14 days from time of quote; provided, however, that Sysco Corporation and its affiliated entities (collectively, "Sysco") reserve the right to adjust pricing at any time to reflect the impact of tariffs, duties, or similar governmental charges imposed after the date of this proposal. Any such adjustments will be calculated in good faith to ensure fair allocation of the increased costs. We will provide notice of any such adjustments along with documentation supporting the adjustment.** Gas Equipment Must be Notated if your location is above 2000 Feet Elevation. Please make your sales associate aware if you are above 2000 Feet.**

This bid is based on our understanding of the information furnished to us. While we make every effort to ensure that the bid is correct, it is ultimately the customer's responsibility to check the bid for errors.

NOTE: INSPECT ALL PACKAGES FOR DAMAGE BEFORE ACCEPTING DELIVERY OF THE PACKAGE AS FREIGHT CARRIERS WILL NOT ACCEPT DAMAGE CLAIMS AND NO CREDIT WILL BE GIVEN AFTER DELIVERY HAS BEEN ACCEPTED. IF FREIGHT DAMAGE IS NOTICED PLEASE REFUSE THE DELIVERY AND NOTIFY YOUR SYSCO SALES CONSULTANT.

Imperative – You must KEEP the original packaging and pallets until you are certain that you do not wish to return this unit and it has been inspected fully for damage. Manufacturers will not accept a return which is not in original packaging and affixed to a pallet to prevent damage during the return shipping process. If these instructions are not followed, we will be unable to issue a FULL credit.

At Sysco, we strive to provide you with the highest quality products. All orders are subject to a 25% restocking fee. Please note that shipping and handling fees are not refundable. If you received an item in error, we'll gladly pay for the return shipping cost and waive the restocking fee. All returns must be properly packed and the returned product and equipment must be in new, unused condition and must be in its original packaging. All returns will be inspected for damage or usage prior to issuance of a credit or refund.

A: The Merchandise listed on the foregoing quote is not carried in our regular stock. SPECIAL ORDERS ARE NOT SUBJECT TO CANCELLATION, AND MERCHANDISE CANNOT BE RETURNED UNLESS DEFECTIVE. Sales taxes are not included in prices shown. Submittal of this order does not constitute an agreement to sell until accepted by Sysco's E&S Bid Team, unless otherwise so stated above. ALL PRICES QUOTED ARE SUBJECT TO CHANGE WITH OUT NOTICE.

1. THERE ARE NO EXPRESS OR IMPLIED WARRANTIES OF MERCHANTABILTY OR OF FITNESS ON THE PART OF SYSCO UNLESS OTHERWISE STATED HEREIN. SYSCO NOT RESPONSIBLE FOR ANY OR ALL WARRANTY CLAIMS, ALL WARRANTIES ARE BY FACTORY AUTHORIZED AGENTS ONLY

2. Equipment carries standard factory warranties only, and does not include labor costs or transportation costs on any defective parts replacement. It is the responsibility of the customer to submit for approval to all local, State and Federal agencies all installation and equipment specifications. Sysco is not responsible for acquiring any approvals or licenses.

3. Items do not include delivery charges unless otherwise stated. IF FREIGHT IS QUOTED IT IS AN ESTIMATE ONLY AND MAY VARY FROM ACTUAL FREIGHT BILLED. All deliveries are curbside delivery with lift gate within normal business hours, without a delivery appointment, not street level or uncrated, set in place or otherwise installed in any way. Necessary parts for mechanical or electrical connections from rough ins to equipment or labor for installation or final hook-up are not included. Buyer is responsible for making certain that your premises provide the proper electrical and or gas supply that plumbing lines are properly sized, and the doors and passage ways will accommodate the equipment.

4. No trade-ins are considered, and no allowance will be made for any trade-in.

5. Sysco DOES NOT ASSUME RESPONSIBILITY FOR UNAVOIDABLE DELAYS IN MANFACTURING OR TRANSIT OR LOSS OR DAMAGE IN TRANSIT.

6. I UNDERSTAND THE MERCHANDISE LISTED ABOVE IS NOT CARRIED IN THE SYSCO REGULAR STOCK. THEREFORE THE ORDER CANNOT BE CANCELLED BY ME OR RETURNED TO SYSCO FOR CREDIT.

Signature_____

7. It is the responsibility of the customer accepting a direct shipment to note any visible damage on the freight bill AT THE TIME OF DELIVERY. Concealed damage must be REPORTED TO THE FREIGHT LINE. In the event of such damage, it is the CUSTOMER'S RESPONSIBILITY to file a freight claim with the carrier involved within 24 hours.

Signature_____

8. Factory direct orders may have production over runs resulting in the cost of and product being added to the order.

9. If less than factory case lots or below factory minimum orders are placed there will be a broken case charge and minimum order charge applied to order.

10. Finance options are available through our partner - Time Payment. Click the button to get a free quote, or ask your sales associate for more information.

Get Quote

11. All orders are subject to Sysco credit approval – a deposit or a UCC filing may be required – please check with your Sysco Sales Consultant.

12. PLEASE NOTE THAT TAXES ON THIS BID ARE ESTIMATED AND THE EXACT LOCAL AND STATE TAXES WILL BE CALCULATED ON THE FINAL INVOICE FROM YOUR LOCAL SYSCO HOUSE.

- - - Security Agreement - - -

To secure payment and performance of all obligations, Customer (identified above) hereby grants Creditor (identified above) a continuing security interest in all inventory, equipment, and goods manufactured by or distributed by Creditor, whenever sold, consigned, leased, rented or delivered, directly or indirectly, to or for the benefit of Customer by Creditor, wherever located, now owned and hereafter acquired including but not limited to all equipment described within this Agreement; and all replacement parts, accessories and supplies including repossessions and returns; and all proceeds from the sale, lease or rental thereof; and all existing or subsequently arising accounts and accounts receivables, goods, instruments, chattel paper, general intangibles and supporting obligations which may from time to time hereafter come into existence during the term of this Security Agreement. Creditor's security interest is explicitly limited to outstanding obligations between Creditor and Customer. Customer will maintain the Collateral in original condition but for the ordinary wear and tear, and will insure the Collateral against all expected risks. Customer will not subject the Collateral to any adverse encumbrance or lien, or sale or other transfer other than as approved in writing by Creditor including through this Agreement. If Customer fails to timely make any payment, Creditor may repossess and remove any Collateral from Customer with or without Notice. Customer will not locate the Collateral at any location other than as known to Creditor. Customer will promptly advise Creditor of any change of Customer's name or business nature, location, and business openings and closings. The following constitute Customer defaults: Non-payment in timely fashion of Customer's indebtedness to Creditor, Customer's noncompliance with any obligation of this Agreement, bankruptcy, insolvency, or assignment for the benefit of creditors; misrepresentation in respect of any provision of this or any Agreement between Creditor and Customer. In the event of default, Creditor may declare all unpaid balances due and payable and/or may require Customer to assemble the Collateral and make it available to allow Creditor to take possession or dispose of the collateral. Customer authorizes Creditor to file a financing statement describing the Collateral and grants Creditor a limited Power of Attorney to sign any forms/document deemed necessary by Creditor to protect Creditor's interest. By signature on this document, Customer's representative represents and warrants that he/she has the authority to bind Customer as set forth herein.

Acceptance: _____

Date: _____

Printed Name: _____

Acceptance: _____ Date: _____

Printed Name: _____

Project Grand Total:

Quote

05/13/2026

Project:
JONATHAN'S GRILLE Smyrna Bar

From:
Supplies on the Fly
Thomas Ross
222 Chastain Meadows Ct Suite 200
Kennesaw, GA 30144-7029
866-792-4793

Job Reference Number: 177332

Item	Qty	Description
1	1 ea	**BOTTLE COOLER**
		True Mfg. - General Foodservice Model No. TD-95-38-HC Bottle Cooler, flat top, (37.5cs) 12 oz. bottles or (55cs) 12 oz. can capacity, stainless steel counter top & (3) lids, locks standard, well design, (7) PVC coated adjustable bin dividers, LED interior lighting, bottle cap opener & cap catcher, black powder coated exterior, galvanized interior, view spec sheet for electrical information & certifications, Made in USA
	1 ea	7 year compressor warranty, 7 years parts warranty, 7 year labor warranty, standard. Visit www.truemfg.com for specifics.
	1 ea	Self-contained refrigeration standard
	1 ea	Solid lid, standard
2	2 ea	**GLASS AND PLATE CHILLER**
		True Mfg. - General Foodservice Model No. T-50-GC-HC Glass and Plate Chiller/Froster, 0°F & below, capacity: (250) 8" mugs or (240) 10 oz. steins, (5) adjustable PVC coated shelves, stainless steel counter top & (2) lids, deep well design, auto defrost, galvanized interior, black powder coated exterior, view spec sheet for electrical information & certifications, Made in USA
	2 ea	7 year compressor warranty, 7 years parts warranty, 7 year labor warranty, standard. Visit www.truemfg.com for specifics.
	2 ea	Self-contained refrigeration standard
3	2 ea	**UNDERCOUNTER REFRIGERATOR**
		True Mfg. - General Foodservice Model No. TUC-27G-HC~FGD01 Undercounter Refrigerator, framed glass door version 01, 33 - 38°F, (1) Low-E glass door, (2) PVC coated adjustable wire shelves, LED interior lighting, stainless steel top, front & sides, clear coated aluminum interior with stainless steel floor, view spec sheet for electrical information & certifications, Made in USA
	2 ea	7 year compressor warranty, 7 years parts warranty, 7 year labor warranty, standard. Visit www.truemfg.com for specifics.
	2 ea	Self-contained refrigeration standard
	2 ea	Right Hand, Standard: Unit comes with field reversible hinges (New door must be ordered) & is built with hinging on right side of unit.
	2 ea	Locks, factory installed, standard
	2 ea	Castors, 5" (36" work surface height) standard

Initial: _____

Item	Qty	Description
4	1 ea	**SPEED RAIL / RACK** Krowne Model No. RD-36 Royal Series Double Speed Rail, built-in, 36"W x 10"D, sound deadened bottom, stainless steel construction, NSF
5	4 ea	**SPEED RAIL / RACK** Krowne Model No. RD-24 Royal Series Double Speed Rail, built-in, 24"W x 10"D, sound deadened bottom, stainless steel construction, NSF
6	52 ea	**POST** Quantum Model No. P74PX Post with Leveling Legs, 74"H, numbered grooves in 1" increments, includes (1) W-PLI & (1) W-PLB (pre-inserted), green epoxy antimicrobial finish, NSF
	52 ea	15 year limited warranty (limited against rust and corrosion)
7	12 ea	**SHELVING, WIRE** Quantum Model No. 2448P Wire Shelf, 48"W x 24"D, 600 - 800 lb. capacity, green epoxy antimicrobial finish, NSF
	12 ea	15 year limited warranty (limited against rust and corrosion)
8	14 ea	**SHELVING, WIRE** Quantum Model No. 2472P Wire Shelf, 72"W x 24"D, 600 - 800 lb. capacity, green epoxy antimicrobial finish, NSF
	14 ea	15 year limited warranty (limited against rust and corrosion)
9	26 ea	**SHELVING, WIRE** Quantum Model No. 2460P Wire Shelf, 60"W x 24"D, 600 - 800 lb. capacity, green epoxy antimicrobial finish, NSF
	26 ea	15 year limited warranty (limited against rust and corrosion)
10	1 ea	**ICE BIN** John Boos Model No. UBIB-1836-X Slim-Line Underbar Ice Bin/Cocktail Unit, 36"W x 18"D x 32-1/2"H overall size, 34"W x 15" front-to-back x 13-1/2" deep insulated ice bin with drain, 3"H backsplash, includes 2-piece sliding lid, 18/300 stainless steel construction, stainless steel legs & side bracing, adjustable stainless steel bullet feet, NSF (weights are subject to additional packaging)
	1 ea	Standard flyer accessories only, NO modifications to flyer items allowed or their accessories

Item	Qty	Description
11	8 ea	**CHECK MINDER TICKET HOLDER / RAIL** CFS Brands Model No. CK6560A Packed 6 ea San Jamar - Slide Check Rack, 60"L x 3/4"W x 2"H, glass marbles for smooth sliding, anodized aluminum (bagged with header card)
12	2 ea	**CHANGING TABLE**  Rubbermaid Commercial Products Model No. FG781888LPLAT Sturdy Station 2™ Changing Station, 35-7/8"L x 28-1/4"W x 19-1/2"H open, large, deep bed, adjustable safety belt, smooth-hinge system, hidden-piston, gusset support, built-in liner storage & diaper bag hook, platinum , Made in USA
13	1 ea	**WARMING DRAWER, FREE STANDING**  Hatco Model No. HDW-1N Warming Drawer Unit, Free Standing, narrow, one drawer, includes (1) standard 6" deep food pan, stainless steel construction, thermostatic controls, 4" legs, CE, cULus, NSF, Made in USA
	1 ea	NOTE: Sale of this product must comply with Hatco's Minimum Resale Price Policy; consult order acknowledgement for details
	1 ea	NOTE: Includes 24/7 parts & service assistance, call 414-671-6350
	1 ea	2-Yr Warranty on drawer warmer heating elements against burnout, standard
	1 ea	2-Yr Warranty on drawer slides & rollers against breakage, standard
	1 ea	120v/60/1-ph, 450 watts, 3.8 amps, NEMA 5-15P (domestic voltage), standard
	1 ea	STANDARD Stainless Steel Drawer Front, standard (available at time of purchase only)

****Pricing valid for 14 days from time of quote; provided, however, that Sysco Corporation and its affiliated entities (collectively, "Sysco") reserve the right to adjust pricing at any time to reflect the impact of tariffs, duties, or similar governmental charges imposed after the date of this proposal. Any such adjustments will be calculated in good faith to ensure fair allocation of the increased costs. We will provide notice of any such adjustments along with documentation supporting the adjustment.** Gas Equipment Must be Notated if your location is above 2000 Feet Elevation. Please make your sales associate aware if you are above 2000 Feet.**

This bid is based on our understanding of the information furnished to us. While we make every effort to ensure that the bid is correct, it is ultimately the customer's responsibility to check the bid for errors.

NOTE: INSPECT ALL PACKAGES FOR DAMAGE BEFORE ACCEPTING DELIVERY OF THE PACKAGE AS FREIGHT CARRIERS WILL NOT ACCEPT DAMAGE CLAIMS AND NO CREDIT WILL BE GIVEN AFTER DELIVERY HAS BEEN ACCEPTED. IF FREIGHT DAMAGE IS NOTICED PLEASE REFUSE THE DELIVERY AND NOTIFY YOUR SYSCO SALES CONSULTANT.

Imperative – You must KEEP the original packaging and pallets until you are certain that you do not wish to return this unit and it has been inspected fully for damage. Manufacturers will not accept a return which is not in original packaging and affixed to a pallet to prevent damage during the return shipping process. If these instructions are not followed, we will be unable to issue a FULL credit.

At Sysco, we strive to provide you with the highest quality products. All orders are subject to a 25% restocking fee. Please note that shipping and handling fees are not refundable. If you received an item in error, we'll gladly pay for the return shipping cost and waive the restocking fee. All returns must be properly packed and the returned product and equipment must be in new, unused condition and must be in its original packaging. All returns will be inspected for damage or usage prior to issuance of a credit or refund.

A: The Merchandise listed on the foregoing quote is not carried in our regular stock. SPECIAL ORDERS ARE NOT SUBJECT TO CANCELLATION, AND MERCHANDISE CANNOT BE RETURNED UNLESS DEFECTIVE. Sales taxes are not included in prices shown. Submittal of this order does not constitute an agreement to sell until accepted by Sysco's E&S Bid Team, unless otherwise so stated above. ALL PRICES QUOTED ARE SUBJECT TO CHANGE WITH OUT NOTICE.

1. THERE ARE NO EXPRESS OR IMPLIED WARRANTIES OF MERCHANTABILTY OR OF FITNESS ON THE PART OF SYSCO UNLESS OTHERWISE STATED HEREIN. SYSCO NOT RESPONSIBLE FOR ANY OR ALL WARRANTY CLAIMS, ALL WARRANTIES ARE BY FACTORY AUTHORIZED AGENTS ONLY

2. Equipment carries standard factory warranties only, and does not include labor costs or transportation costs on any defective parts replacement. It is the responsibility of the customer to submit for approval to all local, State and Federal agencies all installation and equipment specifications. Sysco is not responsible for acquiring any approvals or licenses.

3. Items do not include delivery charges unless otherwise stated. IF FREIGHT IS QUOTED IT IS AN ESTIMATE ONLY AND MAY VARY FROM ACTUAL FREIGHT BILLED. All deliveries are curbside delivery with lift gate within normal business hours, without a delivery appointment, not street level or uncrated, set in place or otherwise installed in any way. Necessary parts for mechanical or electrical connections from rough ins to equipment or labor for installation or final hook-up are not included. Buyer is responsible for making certain that your premises provide the proper electrical and or gas supply that plumbing lines are properly sized, and the doors and passage ways will accommodate the equipment.

4. No trade-ins are considered, and no allowance will be made for any trade-in.

5. Sysco DOES NOT ASSUME RESPONSIBILITY FOR UNAVOIDABLE DELAYS IN MANFACTURING OR TRANSIT OR LOSS OR DAMAGE IN TRANSIT.

6. I UNDERSTAND THE MERCHANDISE LISTED ABOVE IS NOT CARRIED IN THE SYSCO REGULAR STOCK. THEREFORE THE ORDER CANNOT BE CANCELLED BY ME OR RETURNED TO SYSCO FOR CREDIT.

Signature_____

7. It is the responsibility of the customer accepting a direct shipment to note any visible damage on the freight bill AT THE TIME OF DELIVERY. Concealed damage must be REPORTED TO THE FREIGHT LINE. In the event of such damage, it is the CUSTOMER'S RESPONSIBILITY to file a freight claim with the carrier involved within 24 hours.

Signature_____

8. Factory direct orders may have production over runs resulting in the cost of and product being added to the order.

9. If less than factory case lots or below factory minimum orders are placed there will be a broken case charge and minimum order charge applied to order.

10. Finance options are available through our partner - Time Payment. Click the button to get a free quote, or ask your sales associate for more information.

Get Quote

11. All orders are subject to Sysco credit approval – a deposit or a UCC filing may be required – please check with your Sysco Sales Consultant.

12. PLEASE NOTE THAT TAXES ON THIS BID ARE ESTIMATED AND THE EXACT LOCAL AND STATE TAXES WILL BE CALCULATED ON THE FINAL INVOICE FROM YOUR LOCAL SYSCO HOUSE.

- - - Security Agreement - - -

To secure payment and performance of all obligations, Customer (identified above) hereby grants Creditor (identified above) a continuing security interest in all inventory, equipment, and goods manufactured by or distributed by Creditor, whenever sold, consigned, leased, rented or delivered, directly or indirectly, to or for the benefit of Customer by Creditor, wherever located, now owned and hereafter acquired including but not limited to all equipment described within this Agreement; and all replacement parts, accessories and supplies including repossessions and returns; and all proceeds from the sale, lease or rental thereof; and all existing or subsequently arising accounts and accounts receivables, goods, instruments, chattel paper, general intangibles and supporting obligations which may from time to time hereafter come into existence during the term of this Security Agreement. Creditor's security interest is explicitly limited to outstanding obligations between Creditor and Customer. Customer will maintain the Collateral in original condition but for the ordinary wear and tear, and will insure the Collateral against all expected risks. Customer will not subject the Collateral to any adverse encumbrance or lien, or sale or other transfer other than as approved in writing by Creditor including through this Agreement. If Customer fails to timely make any payment, Creditor may repossess and remove any Collateral from Customer with or without Notice. Customer will not locate the Collateral at any location other than as known to Creditor. Customer will promptly advise Creditor of any change of Customer's name or business nature, location, and business openings and closings. The following constitute Customer defaults: Non-payment in timely fashion of Customer's indebtedness to Creditor, Customer's noncompliance with any obligation of this Agreement, bankruptcy, insolvency, or assignment for the benefit of creditors; misrepresentation in respect of any provision of this or any Agreement between Creditor and Customer. In the event of default, Creditor may declare all unpaid balances due and payable and/or may require Customer to assemble the Collateral and make it available to allow Creditor to take possession or dispose of the collateral. Customer authorizes Creditor to file a financing statement describing the Collateral and grants Creditor a limited Power of Attorney to sign any forms/document deemed necessary by Creditor to protect Creditor's interest. By signature on this document, Customer's representative represents and warrants that he/she has the authority to bind Customer as set forth herein.

Acceptance: _____

Date: _____

Printed Name: _____

Acceptance: _____ Date: _____

Printed Name: _____

Project Grand Total:

Don ON Sysco | Shop

Quote

05/13/2026

Project:
JONATHAN'S GRILLE Smyrna Work Tables

From:
Supplies on the Fly
Thomas Ross
222 Chastain Meadows Ct Suite 200
Kennesaw, GA 30144-7029
866-792-4793

Job Reference Number: 177299

Item	Qty	Description
1	1 ea	**WORK TABLE, STAINLESS STEEL TOP**  Advance Tabco Model No. MS-364 Work Table, 48"W x 36"D, 16 gauge 304 stainless steel top, 18 gauge stainless steel adjustable undershelf, stainless steel legs & adjustable bullet feet, NSF
2	2 ea	**WORK TABLE, STAINLESS STEEL TOP**  Advance Tabco Model No. MS-309 Work Table, 108"W x 30"D, 16 gauge 304 stainless steel top, 18 gauge stainless steel adjustable undershelf, stainless steel legs & adjustable bullet feet, NSF
3	1 ea	**WORK TABLE, STAINLESS STEEL TOP**  Advance Tabco Model No. MS-243 Work Table, 36"W x 24"D, 16 gauge 304 stainless steel top, 18 gauge stainless steel adjustable undershelf, stainless steel legs & adjustable bullet feet, NSF
4	1 ea	**WORK TABLE, STAINLESS STEEL TOP**  Advance Tabco Model No. MS-367 Work Table, 84"W x 36"D, 16 gauge 304 stainless steel top, 18 gauge stainless steel adjustable undershelf, stainless steel legs & adjustable bullet feet, NSF
5	1 ea	**WORK TABLE, STAINLESS STEEL TOP**  Advance Tabco Model No. MS-304 Work Table, 48"W x 30"D, 16 gauge 304 stainless steel top, 18 gauge stainless steel adjustable undershelf, stainless steel legs & adjustable bullet feet, NSF
6	2 ea	**WORK TABLE, STAINLESS STEEL TOP**  Advance Tabco Model No. TMS-365 Work Table, 60"W x 36"D, 16 gauge 304 stainless steel top, stainless steel legs with side & rear crossrails, adjustable stainless steel bullet feet, NSF

Item	Qty	Description
7	1 ea	**WORK TABLE, STAINLESS STEEL TOP**  Advance Tabco Model No. SLAG-185-X Special Value Work Table, 60"W x 18"D, 16 gauge 430 stainless steel top, 18 gauge adjustable stainless steel undershelf, stainless steel legs & adjustable bullet feet, NSF (Special Value NET Pricing)
8	2 ea	**BUN / SHEET PAN RACK**  Advance Tabco Model No. PR20-3W-X Special Value Pan Rack, mobile, full height, end loading, 20-1/4"W x 26"D x 69-1/4"H, (20) 18" x 26" or (40) 13" x 18" sheet pan capacity, slides on 3" centers, open sides, all-welded aluminum construction, 5" swivel casters, NSF (Special Value NET Pricing)

****Pricing valid for 14 days from time of quote; provided, however, that Sysco Corporation and its affiliated entities (collectively, "Sysco") reserve the right to adjust pricing at any time to reflect the impact of tariffs, duties, or similar governmental charges imposed after the date of this proposal. Any such adjustments will be calculated in good faith to ensure fair allocation of the increased costs. We will provide notice of any such adjustments along with documentation supporting the adjustment.** Gas Equipment Must be Notated if your location is above 2000 Feet Elevation. Please make your sales associate aware if you are above 2000 Feet.**

This bid is based on our understanding of the information furnished to us. While we make every effort to ensure that the bid is correct, it is ultimately the customer's responsibility to check the bid for errors.

NOTE: INSPECT ALL PACKAGES FOR DAMAGE BEFORE ACCEPTING DELIVERY OF THE PACKAGE AS FREIGHT CARRIERS WILL NOT ACCEPT DAMAGE CLAIMS AND NO CREDIT WILL BE GIVEN AFTER DELIVERY HAS BEEN ACCEPTED. IF FREIGHT DAMAGE IS NOTICED PLEASE REFUSE THE DELIVERY AND NOTIFY YOUR SYSCO SALES CONSULTANT.

Imperative – You must KEEP the original packaging and pallets until you are certain that you do not wish to return this unit and it has been inspected fully for damage. Manufacturers will not accept a return which is not in original packaging and affixed to a pallet to prevent damage during the return shipping process. If these instructions are not followed, we will be unable to issue a FULL credit.

At Sysco, we strive to provide you with the highest quality products. All orders are subject to a 25% restocking fee. Please note that shipping and handling fees are not refundable. If you received an item in error, we'll gladly pay for the return shipping cost and waive the restocking fee. All returns must be properly packed and the returned product and equipment must be in new, unused condition and must be in its original packaging. All returns will be inspected for damage or usage prior to issuance of a credit or refund.

A: The Merchandise listed on the foregoing quote is not carried in our regular stock. SPECIAL ORDERS ARE NOT SUBJECT TO CANCELLATION, AND MERCHANDISE CANNOT BE RETURNED UNLESS DEFECTIVE. Sales taxes are not included in prices shown. Submittal of this order does not constitute an agreement to sell until accepted by Sysco's E&S Bid Team, unless otherwise so stated above. ALL PRICES QUOTED ARE SUBJECT TO CHANGE WITH OUT NOTICE.

1. THERE ARE NO EXPRESS OR IMPLIED WARRANTIES OF MERCHANTABILTY OR OF FITNESS ON THE PART OF SYSCO UNLESS OTHERWISE STATED HEREIN. SYSCO NOT RESPONSIBLE FOR ANY OR ALL WARRANTY CLAIMS, ALL WARRANTIES ARE BY FACTORY AUTHORIZED AGENTS ONLY

2. Equipment carries standard factory warranties only, and does not include labor costs or transportation costs on any defective parts replacement. It is the responsibility of the customer to submit for approval to all local, State and Federal agencies all installation and equipment specifications. Sysco is not responsible for acquiring any approvals or licenses.

3. Items do not include delivery charges unless otherwise stated. IF FREIGHT IS QUOTED IT IS AN ESTIMATE ONLY AND MAY VARY FROM ACTUAL FREIGHT BILLED. All deliveries are curbside delivery with lift gate within normal business hours, without a delivery appointment, not street level or uncrated, set in place or otherwise installed in any way. Necessary parts for mechanical or electrical connections from rough ins to equipment or labor for installation or final hook-up are not included. Buyer is responsible for making certain that your premises provide the proper electrical and or gas supply that plumbing lines are properly sized, and the doors and passage ways will accommodate the equipment.

4. No trade-ins are considered, and no allowance will be made for any trade-in.

5. Sysco DOES NOT ASSUME RESPONSIBILITY FOR UNAVOIDABLE DELAYS IN MANFACTURING OR TRANSIT OR LOSS OR DAMAGE IN TRANSIT.

6. I UNDERSTAND THE MERCHANDISE LISTED ABOVE IS NOT CARRIED IN THE SYSCO REGULAR STOCK. THEREFORE THE ORDER CANNOT BE CANCELLED BY ME OR RETURNED TO SYSCO FOR CREDIT.

Signature_____

7. It is the responsibility of the customer accepting a direct shipment to note any visible damage on the freight bill AT THE TIME OF DELIVERY. Concealed damage must be REPORTED TO THE FREIGHT LINE. In the event of such damage, it is the CUSTOMER'S RESPONSIBILITY to file a freight claim with the carrier involved within 24 hours.

Signature_____

8. Factory direct orders may have production over runs resulting in the cost of and product being added to the order.

9. If less than factory case lots or below factory minimum orders are placed there will be a broken case charge and minimum order charge applied to order.

10. Finance options are available through our partner - Time Payment. Click the button to get a free quote, or ask your sales associate for more information.

Get Quote

11. All orders are subject to Sysco credit approval – a deposit or a UCC filing may be required – please check with your Sysco Sales Consultant.

12. PLEASE NOTE THAT TAXES ON THIS BID ARE ESTIMATED AND THE EXACT LOCAL AND STATE TAXES WILL BE CALCULATED ON THE FINAL INVOICE FROM YOUR LOCAL SYSCO HOUSE.

- - - Security Agreement - - -

To secure payment and performance of all obligations, Customer (identified above) hereby grants Creditor (identified above) a continuing security interest in all inventory, equipment, and goods manufactured by or distributed by Creditor, whenever sold, consigned, leased, rented or delivered, directly or indirectly, to or for the benefit of Customer by Creditor, wherever located, now owned and hereafter acquired including but not limited to all equipment described within this Agreement; and all replacement parts, accessories and supplies including repossessions and returns; and all proceeds from the sale, lease or rental thereof; and all existing or subsequently arising accounts and accounts receivables, goods, instruments, chattel paper, general intangibles and supporting obligations which may from time to time hereafter come into existence during the term of this Security Agreement. Creditor's security interest is explicitly limited to outstanding obligations between Creditor and Customer. Customer will maintain the Collateral in original condition but for the ordinary wear and tear, and will insure the Collateral against all expected risks. Customer will not subject the Collateral to any adverse encumbrance or lien, or sale or other transfer other than as approved in writing by Creditor including through this Agreement. If Customer fails to timely make any payment, Creditor may repossess and remove any Collateral from Customer with or without Notice. Customer will not locate the Collateral at any location other than as known to Creditor. Customer will promptly advise Creditor of any change of Customer's name or business nature, location, and business openings and closings. The following constitute Customer defaults: Non-payment in timely fashion of Customer's indebtedness to Creditor, Customer's noncompliance with any obligation of this Agreement, bankruptcy, insolvency, or assignment for the benefit of creditors; misrepresentation in respect of any provision of this or any Agreement between Creditor and Customer. In the event of default, Creditor may declare all unpaid balances due and payable and/or may require Customer to assemble the Collateral and make it available to allow Creditor to take possession or dispose of the collateral. Customer authorizes Creditor to file a financing statement describing the Collateral and grants Creditor a limited Power of Attorney to sign any forms/document deemed necessary by Creditor to protect Creditor's interest. By signature on this document, Customer's representative represents and warrants that he/she has the authority to bind Customer as set forth herein.

Acceptance: _____

Date: _____

Printed Name: _____

Acceptance: _____ Date: _____

Printed Name: _____

Project Grand Total:

Don ON Sysco | Shop

Quote

05/13/2026

Project:
JONATHAN'S GRILLE Smyrna Additional

From:
Supplies on the Fly
Thomas Ross
222 Chastain Meadows Ct Suite 200
Kennesaw, GA 30144-7029
866-792-4793

Job Reference Number: 177326

Item	Qty	Description
1	1 cs	**DUNNAGE RACK** 1880 Hospitality Model No. DNRK-2036 Packed 6 ea Update International™ - Dunnage Rack, 20"W x 36"L x 8"H, 1800 lb. capacity, heli-arc welded aluminum, with plastic soles on legs, NSF
2	1 cs	**DUNNAGE RACK** 1880 Hospitality Model No. DNRK-2024 Packed 6 ea Update International™ - Dunnage Rack, 24"L x 20"W x 8"H, 1800 lbs. weight capacity, heli-arc welded aluminum, with plastic soles on legs, NSF
3	1 ea	**CAN RACK** GSW USA Model No. AAR-CRAW41 Can Rack, half size, with counter top, mobile, 25"W x 35"L x 42"H, (4) levels, each hold (18) #10 or (24) #5 cans, aluminum, (4) 6" casters (all with brakes), ETL
4	4 ea	**MICROWAVE OVEN** ACP Model No. HDC12A2 Amana® Commercial Microwave Oven, countertop, stackable, 0.6 cu. ft. capacity, 1200 watts, heavy volume, (2) magnetrons, 4-stage cooking, multiple portion setting, (11) power levels, (100) memory settings, smart USB connectivity, ACP Programming compatible, multi-language operation, 60-minute max cooking time, touchpad controls with LED display, interlock safety switch, audible end of cycle signal, side hinged door with tempered glass, Grab & Go door handle, sealed ceramic interior shelf, lighted interior, stainless steel exterior & interior, 2kW, 120v/60/1-ph, 20.0 amps, cord, NEMA 5-20, cETLus, ETL-Sanitation
	4 ea	3 year full warranty, standard

Item	Qty	Description
5	1 ea	**UNDERCOUNTER REFRIGERATOR**
		True Mfg. - General Foodservice Model No. TUC-27D-2-HC Undercounter Refrigerator, 33 - 38°F, (2) drawers each, accommodates (1) 12" x 20" x 6" food pan (NOT included), stainless steel top, front & sides, clear coated aluminum interior with stainless steel floor, view spec sheet for electrical information & certifications, Made in USA
	1 ea	7 year compressor warranty, 7 years parts warranty, 7 year labor warranty, standard. Visit www.truemfg.com for specifics.
	1 ea	Self-contained refrigeration standard
	1 ea	Locks, factory installed, standard
	1 ea	Castors, 5" (36" work surface height) standard
6	1 ea	**CABINET, COOK / HOLD / OVEN**
		Alto-Shaam Model No. 500-TH/II Halo Heat® Cook & Hold Oven, electric, low temperature, 40 lb. capacity - (4) 12" x 20" x 2-1/2" full-size pans, simple controller with ON/OFF switch, heavy-duty stainless steel exterior, stainless steel side racks, (2) stainless steel wire shelves, (1) exterior drip tray with removable pan, 2-1/2" casters; 2 rigid, 2 swivel with brake, EcoSmart®, cULus, UL EPH ANSI/NSF 4, CE, IPX3, TUV NORD, EAC, N11942
	1 ea	NOTE: Subject to Manufacturer's Terms & Conditions. See Documents Section
	1 ea	120v/60/1-ph, 16.0 amps, 1.9kW, 5 ft. cord, NEMA 5-20P
	1 ea	Solid Door, hinged on right, standard

****Pricing valid for 14 days from time of quote; provided, however, that Sysco Corporation and its affiliated entities (collectively, "Sysco") reserve the right to adjust pricing at any time to reflect the impact of tariffs, duties, or similar governmental charges imposed after the date of this proposal. Any such adjustments will be calculated in good faith to ensure fair allocation of the increased costs. We will provide notice of any such adjustments along with documentation supporting the adjustment.** Gas Equipment Must be Notated if your location is above 2000 Feet Elevation. Please make your sales associate aware if you are above 2000 Feet.**

This bid is based on our understanding of the information furnished to us. While we make every effort to ensure that the bid is correct, it is ultimately the customer's responsibility to check the bid for errors.

NOTE: INSPECT ALL PACKAGES FOR DAMAGE BEFORE ACCEPTING DELIVERY OF THE PACKAGE AS FREIGHT CARRIERS WILL NOT ACCEPT DAMAGE CLAIMS AND NO CREDIT WILL BE GIVEN AFTER DELIVERY HAS BEEN ACCEPTED. IF FREIGHT DAMAGE IS NOTICED PLEASE REFUSE THE DELIVERY AND NOTIFY YOUR SYSCO SALES CONSULTANT.

Imperative – You must KEEP the original packaging and pallets until you are certain that you do not wish to return this unit and it has been inspected fully for damage. Manufacturers will not accept a return which is not in original packaging and affixed to a pallet to prevent damage during the return shipping process. If these instructions are not followed, we will be unable to issue a FULL credit.

At Sysco, we strive to provide you with the highest quality products. All orders are subject to a 25% restocking fee. Please note that shipping and handling fees are not refundable. If you received an item in error, we'll gladly pay for the return shipping cost and waive the restocking fee. All returns must be properly packed and the returned product and equipment must be in new, unused condition and must be in its original packaging. All returns will be inspected for damage or usage prior to issuance of a credit or refund.

A: The Merchandise listed on the foregoing quote is not carried in our regular stock. SPECIAL ORDERS ARE NOT SUBJECT TO CANCELLATION, AND MERCHANDISE CANNOT BE RETURNED UNLESS DEFECTIVE. Sales taxes are not included in prices shown. Submittal of this order does not constitute an agreement to sell until accepted by Sysco's E&S Bid Team, unless otherwise so stated above. ALL PRICES QUOTED ARE SUBJECT TO CHANGE WITH OUT NOTICE.

1. THERE ARE NO EXPRESS OR IMPLIED WARRANTIES OF MERCHANTABILTY OR OF FITNESS ON THE PART OF SYSCO UNLESS OTHERWISE STATED HEREIN. SYSCO NOT RESPONSIBLE FOR ANY OR ALL WARRANTY CLAIMS, ALL WARRANTIES ARE BY FACTORY AUTHORIZED AGENTS ONLY

2. Equipment carries standard factory warranties only, and does not include labor costs or transportation costs on any defective parts replacement. It is the responsibility of the customer to submit for approval to all local, State and Federal agencies all installation and equipment specifications. Sysco is not responsible for acquiring any approvals or licenses.

3. Items do not include delivery charges unless otherwise stated. IF FREIGHT IS QUOTED IT IS AN ESTIMATE ONLY AND MAY VARY FROM ACTUAL FREIGHT BILLED. All deliveries are curbside delivery with lift gate within normal business hours, without a delivery appointment, not street level or uncrated, set in place or otherwise installed in any way. Necessary parts for mechanical or electrical connections from rough ins to equipment or labor for installation or final hook-up are not included. Buyer is responsible for making certain that your premises provide the proper electrical and or gas supply that plumbing lines are properly sized, and the doors and passage ways will accommodate the equipment.

4. No trade-ins are considered, and no allowance will be made for any trade-in.

5. Sysco DOES NOT ASSUME RESPONSIBILITY FOR UNAVOIDABLE DELAYS IN MANFACTURING OR TRANSIT OR LOSS OR DAMAGE IN TRANSIT.

6. I UNDERSTAND THE MERCHANDISE LISTED ABOVE IS NOT CARRIED IN THE SYSCO REGULAR STOCK. THEREFORE THE ORDER CANNOT BE CANCELLED BY ME OR RETURNED TO SYSCO FOR CREDIT.

Signature_____

7. It is the responsibility of the customer accepting a direct shipment to note any visible damage on the freight bill AT THE TIME OF DELIVERY. Concealed damage must be REPORTED TO THE FREIGHT LINE. In the event of such damage, it is the CUSTOMER'S RESPONSIBILITY to file a freight claim with the carrier involved within 24 hours.

Signature_____

8. Factory direct orders may have production over runs resulting in the cost of and product being added to the order.

9. If less than factory case lots or below factory minimum orders are placed there will be a broken case charge and minimum order charge applied to order.

10. Finance options are available through our partner - Time Payment. Click the button to get a free quote, or ask your sales associate for more information.

Get Quote

11. All orders are subject to Sysco credit approval – a deposit or a UCC filing may be required – please check with your Sysco Sales Consultant.

12. PLEASE NOTE THAT TAXES ON THIS BID ARE ESTIMATED AND THE EXACT LOCAL AND STATE TAXES WILL BE CALCULATED ON THE FINAL INVOICE FROM YOUR LOCAL SYSCO HOUSE.

- - - Security Agreement - - -

To secure payment and performance of all obligations, Customer (identified above) hereby grants Creditor (identified above) a continuing security interest in all inventory, equipment, and goods manufactured by or distributed by Creditor, whenever sold, consigned, leased, rented or delivered, directly or indirectly, to or for the benefit of Customer by Creditor, wherever located, now owned and hereafter acquired including but not limited to all equipment described within this Agreement; and all replacement parts, accessories and supplies including repossessions and returns; and all proceeds from the sale, lease or rental thereof; and all existing or subsequently arising accounts and accounts receivables, goods, instruments, chattel paper, general intangibles and supporting obligations which may from time to time hereafter come into existence during the term of this Security Agreement. Creditor's security interest is explicitly limited to outstanding obligations between Creditor and Customer. Customer will maintain the Collateral in original condition but for the ordinary wear and tear, and will insure the Collateral against all expected risks. Customer will not subject the Collateral to any adverse encumbrance or lien, or sale or other transfer other than as approved in writing by Creditor including through this Agreement. If Customer fails to timely make any payment, Creditor may repossess and remove any Collateral from Customer with or without Notice. Customer will not locate the Collateral at any location other than as known to Creditor. Customer will promptly advise Creditor of any change of Customer's name or business nature, location, and business openings and closings. The following constitute Customer defaults: Non-payment in timely fashion of Customer's indebtedness to Creditor, Customer's noncompliance with any obligation of this Agreement, bankruptcy, insolvency, or assignment for the benefit of creditors; misrepresentation in respect of any provision of this or any Agreement between Creditor and Customer. In the event of default, Creditor may declare all unpaid balances due and payable and/or may require Customer to assemble the Collateral and make it available to allow Creditor to take possession or dispose of the collateral. Customer authorizes Creditor to file a financing statement describing the Collateral and grants Creditor a limited Power of Attorney to sign any forms/document deemed necessary by Creditor to protect Creditor's interest. By signature on this document, Customer's representative represents and warrants that he/she has the authority to bind Customer as set forth herein.

Acceptance: _____

Date: _____

Printed Name: _____

Acceptance: _____ Date: _____

Printed Name: _____

Project Grand Total:

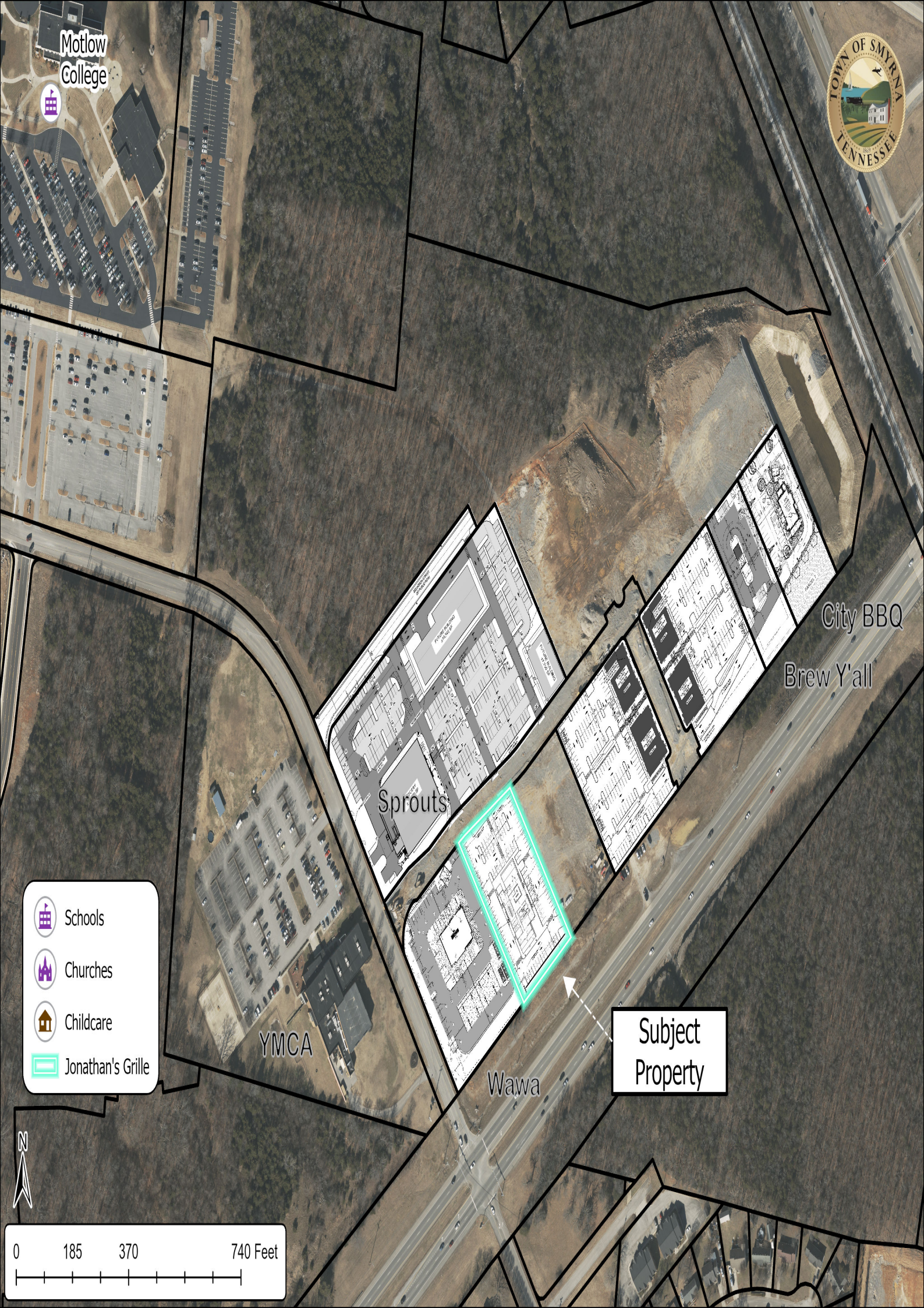
Motlow College
TOWN OF SMYRNA TENNESSEE
City BBQ
Brew Y'all
Sprouts
YMCA
Wawa
Subject Property
Schools
Churches
Childcare
Jonathan's Grille
N
0
185
370
740 Feet

OPERATING AGREEMENT
OF
JONATHAN'S GRILLE - SMYRNA, LLC

THIS OPERATING AGREEMENT is made and entered into as of the ___ day of _____, 2025, and is by and among those persons identified on Exhibit A which is attached hereto and made a part of this Agreement, and as may be hereafter amended.

WHEREAS, the parties to this Agreement desire to form a limited liability company under and pursuant to the Tennessee Limited Liability Company Act, to conduct certain business as a limited liability company, and to set forth their mutual rights and obligations in this Agreement.

WHEREAS, this Agreement supersedes any and all previous operating agreements and amendments thereto, whether written or oral, between the parties.

NOW, THEREFORE, in consideration of the mutual promises, covenants and undertakings hereinafter contained, and other good and valuable consideration, the receipt and sufficiency of which are hereby acknowledged, the parties to this Agreement hereby agree as follows:

ARTICLE 1
DEFINITIONS

As used in this Agreement, the following terms shall have the indicated meanings:

1.1 "Act" means the Revised Tennessee Limited Liability Company Act, Tennessee Code Annotated, Section 48-249-101, et seq., as in effect on the date hereof and as may be hereafter amended.

1.2 "Agreement" means this Operating Agreement, as may be hereafter amended.

1.3 "Chief Manager" means the initial Chief Manager of the Company, who shall be Mason Revelette, or any subsequent Chief Manager as may be elected by the Members.

1.4 "Code" means the Internal Revenue Code of 1986, as may have been and as may hereafter be amended.

1.5 "Company" means JONATHAN'S GRILLE - SMYRNA, LLC, the limited liability company formed by the parties to this Agreement.

1.6 "Distributable Cash" means the net cash flow of the Company, including cash generated from operations, the net proceeds of any insurance

award, condemnation award, or sale of any property, assets, rights or interests of the Company, and the net proceeds of any financing or refinancing, reduced by any required payments on any indebtedness of the Company and by any amounts required to satisfy current or contingent obligations, or fund capital expenditures of the Company, all as determined by the Chief Manager.

1.7 "Financial Rights" means each Member's rights to share in the Net Profits and Net Losses (as provided in Sections 5.1 and 5.2) and to receive distributions from the Company (as provided in Sections 5.4 and 11.4).

1.8 "Governance Rights" means each Member's rights, expressed in terms of his Percentage Interest, to vote on matters to be determined by the Members as provided in this Agreement.

1.9 "Majority" means a group of Members that, as of any given time, collectively holds both a majority of the Governance Rights and a majority of the Financial Rights.

1.10 "Managers" means, collectively, and "Manager" means, individually, the Chief Manager and the Secretary, and those additional or substitute persons who may be elected from time to time by the Members to manage the business and affairs of the Company pursuant to the provisions of this Agreement.

1.11 "Members" means, collectively, and "Member" means, individually, those persons identified on Exhibit A hereto, together with any additional persons admitted pursuant to the provisions of this Agreement.

1.12 "Membership Interest" means each Member's interest in the Company, consisting of (a) Financial Rights, (b) Governance Rights, and (c) rights to assign either Financial Rights or Governance Rights or both, as provided in this Agreement.

1.13 "Net Profits" and "Net Losses" means, with respect to any fiscal period, the taxable income or loss of the Company for such fiscal period determined in accordance with the provisions of Section 703(a) of the Code, taking into account all items of income, gain, loss or deduction which are required to be stated separately pursuant to the provisions of Section 703(a)(1) of the Code, any income of the Company that is exempt from federal income tax and not otherwise taken into account as provided herein, and any expenditures of the Company that are described in Section 705(a)(2)(B) of the Code.

1.14 "Percentage Interest" means, with respect to each Member, the percentage figure or figures shown opposite such Member's name on Exhibit A hereto, as amended from time to time. Upon the formation of the Company, each Member shall have Financial Rights and Governance Rights relative to all other Members in the amount and to the extent determined by reference to his initial Percentage Interest. If, at any time after the formation of the Company, any Member makes a permissible Transfer of Financial Rights and/or Governance

Rights such that his Percentage Interest with respect to Financial Rights and his Percentage Interest with respect to Governance Rights are no longer equal, the Company shall maintain accurate records reflecting the separate Percentage Interests of each Member with respect to Financial Rights and Governance Rights and Exhibit A hereto shall be amended accordingly.

1.16 "Registered Agent" means the initial person designated as the registered agent authorized to accept official mail and accept service of process on behalf of the Company, who shall be Jonathan's Grille Holdco, LLC, or any subsequent Registered Agent as may be elected by the Members.

1.17 "Registered Agent Address" means the initial address designated as the address where registered agent authorized to accept official mail and accept service of process on behalf of the Company, which shall be 7135 S. Springs Drive, Franklin, TN 37067, or any subsequent Registered Agent Address as may be elected by the Members.

1.18 "Secretary" means the initial Secretary of the Company, who shall be Curtis Revelette, or any subsequent Secretary as may be elected by the Members.

1.19 "Transfer" means any transfer, sale, assignment, alienation, gift or pledge of, or grant of a security interest, lien or similar encumbrance in or against, or any other disposition of, all or any part of a Membership Interest, whether voluntarily or involuntarily, whether for or without consideration, including without limitation a transfer by operation of law or a transfer incident to divorce, bankruptcy, foreclosure, judicial sale or other legal proceeding.

1.20 "Treasury Regulations" means the income tax regulations, including temporary and proposed regulations, promulgated under the Code, as such regulations may be amended from time to time.

1.21 "Withdrawal Event" means the retirement, resignation, withdrawal, death, insanity, bankruptcy, dissolution or termination of a Member, or any other event that terminates the membership of a Member in the Company.

ARTICLE 2
FORMATION

2.1 Formation. The parties hereto hereby form a limited liability company under and pursuant to the Act, subject to the terms and conditions set forth in this Agreement. Upon execution of this Agreement, the Chief Manager shall file or cause to be filed articles of organization with the Secretary of State of the State of Tennessee, all as required by the Act.

2.2 Name. The name of the Company shall be JONATHAN'S GRILLE - SMYRNA, LLC. The Company may adopt and conduct its business under such assumed or trade names as the Chief Manager may from time to time determine.

The Company shall file any assumed or fictitious name certificates as may be required to conduct business in any state.

2.3 Principal Executive Office. The principal executive office of the Company shall be 160 W Sam Ridley Parkway, Smyrna, TN 37167. The business of the Company may also be conducted at such other or additional place or places as may hereafter be designated by the Chief Manager.

2.4 Registered Agent and Registered Agent Address. Company's registered agent is Jonathan's Grille Holdco, LLC with a registered office located at 7135 S. Springs Drive, Franklin, TN 37067 for the service of process. The Registered Agent and/or the Registered Agent Office may change at any time by Company filing an amendment with the Secretary of State for the State of Tennessee.

ARTICLE 3
PURPOSE AND POWERS

3.1 Purpose. The purpose and business of the Company shall be:

(a) To operate a restaurant; and

(b) To undertake any other lawful business activity permitted under the laws of the State of Tennessee.

3.2 Powers. In furtherance of the foregoing purposes, the Company shall have the power and authority to do all things necessary or convenient to carry out its business and affairs to the maximum extent permitted under the Act.

ARTICLE 4
CAPITAL

4.1 Initial Capital Contributions. The Members shall make initial contributions to the capital of the Company in the amounts set forth on Exhibit A hereto. The initial capital contributions of the Members shall be paid in full upon execution of this Agreement.

4.2 Additional Capital Contributions. Other than as expressly provided in Section 4.1, no Member shall be required to make any contribution of money or property to the Company at any time.

4.3 Withdrawal and Return of Contributions. No Member shall have the right to demand the return of, or otherwise withdraw, his contributions, or to receive any funds or property of the Company, except as specifically provided in this Agreement. No Member shall have the right to demand and receive property other than cash in return for his contributions.

4.4 Capital Accounts.

(a) A capital account shall be established on the books of the Company for each Member. Each such capital account shall be established and maintained in accordance with the provisions of Treasury Regulations

§ 1.704-1(b)(2)(iv). In general, each such capital account shall be credited with the amount of each Member's contributions to the Company as and when made and with that Member's share of Net Profits. Each Member's capital account shall be debited with his share of Net Losses and with the amount of all distributions made by the Company to that Member.

(b) If all or a portion of the Financial Rights of a Member are transferred in accordance with the provisions of this Agreement, the transferee shall succeed to all or a pro rata portion of the capital account balance of the transferor, determined after the allocation of Net Profits and Net Losses (as provided in Article 5) through the end of the month preceding the date of transfer, based on the Percentage Interest (with respect to Financial Rights) of the transferor then being transferred; provided, however, that the transferor and transferee may by express written agreement provide for an alternate arrangement regarding the extent to which the transferor's capital account balance will be transferred.

(c) No interest shall be paid on capital contributions or on balances in capital accounts.

ARTICLE 5
PROFITS, LOSSES, DISTRIBUTIONS

5.1 Allocations. The Net Profits and Net Losses with respect to each fiscal year shall be allocated among the Members in accordance with their respective Percentage Interests (with respect to Financial Rights).

5.2 Special Allocations. Notwithstanding the provisions of Section 5.1:

(a) The Net Profits and Net Losses with respect to each fiscal year shall be specially allocated among the Members in the manner required under the provisions of Section 704(b) of the Code, and the Treasury Regulations promulgated thereunder, if, when and to the extent such provisions require a special allocation of Net Profits, Net Losses or other tax attributes of the Company to one or more Members to cause all allocations to the Members under this Agreement to have substantial economic effect or be otherwise in accordance with the Members' interests in the Company, in each case within the meaning of Treasury Regulations § 1.704-1(b). Special allocations required under this Section 5.2(a) shall be made at such times and in such manner as the Chief Manager determines appropriate; but in each case, such allocations shall be made in a manner that will cause the capital account balance of each Member to equal as nearly as possible the capital account balance that would result if Net Profits, Net Losses and other tax attributes of the Company had been allocated only as provided in Section 5.1.

(b) Income, gain, loss and deduction with respect to any property contributed to the capital of the Company shall, solely for federal and state income tax purposes, be allocated among the Members so as to take into

account any variation between the adjusted basis of such property to the Company for federal and state income tax purposes and the fair market value of such property at the time of its contribution to the Company. The allocation of any income, gain, loss and deduction as provided in this Section 5.2(b) shall be made in the manner required under the provisions of Section 704(c) of the Code and the Treasury Regulations promulgated thereunder and, for such purposes, the Company shall elect to apply the allocation method described as the "traditional method" in the Treasury Regulations promulgated under Section 704(c) of the Code. Special allocations made pursuant to the provisions of this Section 5.2(b) are solely for purposes of federal and state taxes and shall not affect, or in any way be taken into account in computing, the capital account of any Member or any Member's share of Net Profits, Net Losses or other items or distributions pursuant to any other provision of this Agreement.

5.3 Other Allocation Rules.

(a) For purposes of determining Net Profits, Net Losses and other tax attributes of the Company allocable to any period, Net Profits, Net Losses and other tax attributes of the Company shall be determined on a daily, monthly or other basis, as determined by the Chief Manager using any method permissible under Section 706 of the Code and the Treasury Regulations thereunder.

(b) If the Percentage Interest (with respect to Financial Rights) of any Member changes during any fiscal year, Net Profits, Net Losses and other tax attributes of the Company for each month during the fiscal year shall be allocated among the Members in accordance with their Percentage Interests (with respect to Financial Rights) as of the first day of each such month, and each Member's share of Net Profits, Net Losses and other tax attributes of the Company for the fiscal year shall be the sum of his share of Net Profits, Net Losses and other tax attributes of the Company for each month during the fiscal year.

(c) The Members are aware of the income tax consequences of the allocations provided under this Article 5 and hereby agree to be bound by the provisions of this Article 5 in reporting their respective shares of Net Profits, Net Losses and other tax attributes of the Company for federal, state and local income tax purposes.

5.4 Distribution of Distributable Cash. Except in the case of the dissolution and winding up of the Company, Distributable Cash shall be distributed to the Members, on a quarterly basis, in accordance with their respective Percentage Interests (with respect to Financial Rights). The distribution of proceeds upon dissolution and winding up of the Company shall be made in accordance with Section 11.4.

ARTICLE 6
MEMBERS

6.1 Initial Members. Each of the persons identified on Exhibit A hereto is hereby admitted as a Member of the Company and shall be shown as such on the books and records of the Company.

6.2 Admission of New Members. Additional persons may be admitted as Members of the Company and additional Membership Interests may be issued by the Company at such times, upon such terms and conditions, and for such consideration as the Members may unanimously determine. By unanimous consent the Members may admit a person as a Member to the Company or approve the issuance of an additional Membership Interest to an existing Member, and thereby cause the Percentage Interests of all other Members and holders of Financial Rights to be reduced pro rata by an aggregate amount equal to the Percentage Interest granted by the Company to such newly-admitted or existing Member. Each additional person admitted as a Member of the Company shall execute and deliver a counterpart of this Agreement and shall agree to be bound by the provisions hereof, and pay such consideration as may be required, and no admission shall be effective until such counterpart is executed and delivered to the Company and such consideration paid.

6.3 Meetings. Meetings of all Members may be called by any of the Members by mailing notice thereof to all Members, stating the purpose(s) of the meeting. Notice must be given no fewer than ten (10) days nor no more than two (2) months before the meeting date. Any Member may waive prior notice. Any such meetings shall be held at the principal place of business of the Company, or at such other place as all of the Members may agree. Meetings may be held by telephonic conference call.

6.4 Quorum Requirements for Meetings. The Members holding a majority of the Governance Rights shall constitute a quorum for the transaction of business. Once a Membership Interest is represented at any meeting, it is deemed to be present for the remainder of that meeting and for any adjournment. A meeting may be adjourned despite the absence of a quorum, and notice of an adjourned meeting is not necessary if the time and place to which the meeting is adjourned are announced at the meeting at which the adjournment is taken.

6.5 Action of Members. Except as expressly provided otherwise in this Agreement, any vote, determination, consent, approval or action by the Members required or allowed under the terms of this Agreement shall require the affirmative agreement of Members then holding a majority of the Governance Rights represented at a meeting in which a quorum is present. Any such vote, determination, consent, approval or action may be taken and evidenced by written consent. Whenever the interest of any Member is held by a corporation, partnership, limited liability company, association, trust or other legal entity, any vote, determination, approval, consent or action by that Member may be undertaken only by a single representative of the entity who previously has been

designated by such entity, in a manner satisfactory to the Chief Manager, to act on behalf of the entity.

6.6 Proxies. Every Member entitled to vote at a meeting may do so either in person or by written proxy, which proxy shall be submitted to the Secretary prior to the commencement of any meeting at which the proxy will be utilized. The scope and duration of a proxy shall be governed by its terms, subject to any applicable limitations imposed by the Act. No proxy shall be valid after the expiration of eleven (11) months from the date of its execution unless expressly provided otherwise by its terms. A proxy shall be revocable unless expressly provided otherwise by its terms.

6.7 Action on Written Consent. To take action on written consent: (a) a written waiver of acting at a meeting must be executed by Members then holding a majority of the Governance Rights; and (b) a written consent which describes in sufficient detail the vote, determination, consent, approval or action so taken must be signed by (i) Members who hold a collective Percentage Interest (with respect to Governance Rights) equal to the collective Percentage Interest that would be required to take the same action at a meeting of the Members at which all Members are present, or (ii) if applicable, a Majority. The action must be evidenced by one or more instruments evidencing the waiver and consent, which shall be delivered to the Secretary. All such instruments may be signed in counterparts. An action on written consent shall be effective as of the date indicated in the written instrument, or, if no such date is indicated, as of the date when the last required Member executes the written waiver and consent. An action on written consent may be proposed at any time by any Member.

6.8 Classes of Membership Interests. The Company shall have only one class of Membership Interests.

6.9 Liability of Members. No Member shall have any personal liability or obligation for the acts, debts, liabilities or obligations of the Company, whether such arise in contract, tort or otherwise, by virtue of his status as a Member in the Company. Except as otherwise expressly provided in the Act, the liability of each Member shall be limited to the amount of capital contributions required to be made by such Member in accordance with the provisions of this Agreement, but only when and to the extent the same shall become due pursuant to the provisions of this Agreement.

ARTICLE 7
MANAGEMENT

7.1 Management of Company. The management of the business and affairs of the Company shall be vested in the Members. The Members hereby delegate to the Managers the power and authority to administer the business and affairs of the Company as provided in this Article 7.

7.2 Managers. The Company shall at all times have at least two Managers, the Chief Manager and the Secretary. A Manager need not be a

Member, but must be a natural person. The Members may, at any time, create or eliminate any Manager position other than that of the Chief Manager and the Secretary.

7.3 Election, Withdrawal and Removal of the Chief Manager. The initial Chief Manager shall be Mason Revelette, who shall serve in such capacity until his resignation or removal, as provided herein. In the event Mason Revelette ceases to be the Chief Manager, the Members shall elect a substitute Chief Manager. The Members may, at any time and without cause, remove the Chief Manager. The Chief Manager may, at any time and upon thirty (30) days prior written notice to the Members, resign as the Chief Manager, but such resignation shall not affect his status as a Member, if any.

7.4 Administration of the Company by the Chief Manager.

(a) The day-to-day business and affairs of the Company shall be conducted by the Chief Manager. Except as expressly provided otherwise in this Agreement, all decisions relating to the business and affairs of the Company shall be made by, and all action proposed to be taken by or on behalf of the Company shall be taken by, the Chief Manager without the joinder, consent or approval of any of the Members. Except as expressly provided otherwise in this Agreement, the Chief Manager shall have the full power and authority to execute all documents and take all other actions on behalf of the Company and thereby bind the Company with respect thereto.

(b) The signed statement of the Chief Manager reciting that he has authority to undertake any act or has the necessary votes or consents of the Members to take such act, when delivered to any third party, shall be all the evidence such third party shall need concerning the capacity of such Chief Manager, and any such third party shall be entitled to rely upon such statement and shall not be required to inquire further as to any of the facts contained in such statement, said facts being deemed to be true insofar as such third party is concerned. After delivering such statement, the Chief Manager by his signature alone may sign any instrument and bind the Company and the property of the Company just as though all of the Members had also signed.

(c) Each contract, agreement, deed, mortgage, security agreement, promissory note or other instrument or document executed by the Chief Manager with respect to any business or property of the Company shall be conclusive evidence in favor of any and every person relying thereon or claiming thereunder that: (i) at the time of the execution and delivery thereof, this Agreement was in full force and effect; (ii) such instrument or document was duly executed in accordance with the terms, conditions and provisions of this Agreement and is binding upon the Company; and (iii) the Chief Manager was duly authorized and empowered to execute and deliver any and every such instrument or document for and on behalf of the Company. Such statement shall not,

however, have any effect among the Members unless the action in question was in fact authorized in accordance with the provisions of this Agreement.

7.5 Delegation by the Chief Manager. Unless expressly provided otherwise in this Agreement, the Chief Manager shall have the full power and authority to delegate to one or more officers or representatives of the Company, as the case may be, all rights and powers to manage, control and/or operate the business and affairs of the Company, subject to the supervision of the Chief Manager.

7.6 Secretary.

(a) The initial Secretary Curtis Revelette, who shall serve in such capacity until his resignation or removal, as provided herein. The Members may remove the Secretary and/or elect a new Secretary at any time in the same manner as the Chief Manager. The Secretary may, at any time upon thirty (30) days prior written notice to the Members, voluntarily resign as the Secretary, but such resignation shall not affect his status as a Member, if any.

(b) The Secretary shall have the following duties and powers: (i) maintain accurate membership records for the Company including all records required by the Act; (ii) maintain records and minutes of all meetings of the Members; (iii) receive and maintain all notices sent to the Company; (iv) execute all contracts, documents, certificates and other instruments on behalf of the Company where two signatures are required or when the Chief Manager is unavailable; and (v) perform such other duties and acts as directed by the Members or the Chief Manager.

7.7 Compensation of Managers. In consideration of the performance of services to the Company, the Managers shall receive only such compensation and other benefits from the Company as may be approved from time to time by the Members. The Company shall reimburse the Managers for all direct costs and expenses incurred by the Managers in the performance of their duties and responsibilities under this Agreement.

7.8 Required Approval of the Members. Notwithstanding the provisions of this Article 7, neither the Chief Manager nor any other representative of the Company shall have the power or authority to undertake any of the following acts or cause the Company to enter into any of the following transactions without the consent and approval of a Majority: (a) the voluntary termination of the Company; (b) the sale or other disposition of substantially all of the property or assets of the Company; (c) the consummation of any merger, consolidation or other business combination or recapitalization to which the Company is proposed to be a party; (d) the admission of any new Member to the Company; (e) the issuance of any additional Membership Interest to an existing Member; or (f) the repurchase by the Company of any part of the Membership Interest of any Member.

7.9 Borrowing. The Company may borrow for Company purposes from any source upon such terms and conditions as the Chief Manager may determine. The Chief Manager shall execute and deliver on behalf of the Company any and all promissory notes, security agreements, deeds of trust and other documents and instruments required by a lender in connection therewith.

7.10 Standard of Conduct. Each Manager shall discharge and perform his duties and responsibilities under this Agreement in good faith, in a manner such Manager reasonably believes to be in the best interests of the Company, and with ordinary care. No Manager shall be liable to the Company or to any Member for monetary damages for any losses, claims, damages or liabilities arising from any act or omission performed or omitted by such Manager and arising out of or in connection with this Agreement or the Company's business; provided, however, such act or omission was taken in good faith, was reasonably believed by such Manager to be in the best interests of the Company, was within the scope of authority granted to such Manager, and such act or omission does not constitute fraud, bad faith or willful misconduct on the part of such Manager.

7.11 Other Interests. Any Manager or Member may engage in other business, including business of a nature which is the same as or similar to the business of the Company, without any duty or obligation to account to the Company in connection therewith.

7.12 Liability of Managers and Employees. No Manager, employee or agent of the Company shall have any personal liability or obligation for the acts, debts, liabilities or obligations of the Company, whether such arise in contract, tort or otherwise, by virtue of his status as a Manager, employee or agent of the Company.

7.13 Indemnification. The Members and Managers shall be entitled to be indemnified by the Company to the full extent permitted by the Act. Each employee and agent of the Company shall be entitled to be indemnified by the Company in the same manner and to the same extent as a Manager. Any required determination regarding the permissibility or authorization of indemnification or the reasonableness of any expenses shall be made by the Members, excluding any Member that at the time of such determination is a party to a proceeding with respect to which indemnification is then being requested.

ARTICLE 8
FISCAL MATTERS

8.1 Books and Records. Full and accurate books and records of the Company (including without limitation all information and records required by the Act) shall be maintained at its principal place of business showing all receipts and expenditures, assets and liabilities, Net Profits and Net Losses, and all other transactions and events affecting the business and affairs of the Company. All Members shall have access to the books and records of the Company, during regular business hours, at the Company's principal place of business, upon provision of notice in writing by any Member to the Company at least five (5)

business days before the date on which any Member desires to inspect said books and records.

8.2 Fiscal Year. The fiscal year of the Company shall end on December 31 of each year.

8.3 Tax Status; Elections. Notwithstanding any provision hereof to the contrary, solely for purposes of the United States federal income tax laws, each of the Members hereby recognizes that the Company will be subject to all provisions of Subchapter K of Chapter 1 of Subtitle A of the Code; provided, however, the filing of U. S. Partnership Returns of Income shall not be construed to extend the purposes of the Company or expand the obligations or liabilities of the Members. At the request of any Member, the Company shall file an election under Section 754 of the Code. The Company shall elect a method of accounting based upon the advice and recommendations of the Company's appointed accountants.

8.4 Reports to Members. Each of the following reports shall be prepared at the Company's expense and shall be delivered to each Member:

(a) As soon as practicable after the end of each fiscal year, all information of the Company necessary for the preparation of the Members' federal, state and local income tax returns;

(b) Within one hundred twenty (120) days after the end of each fiscal year, an annual report of the activities of the Company, including a balance sheet, income statement and a statement of cash flows; and,

(c) Any Member may obtain, at such Member's expense, such other reports on the Company's operations and conditions as such Member may reasonably request, which reports shall be mailed by the Company within one (1) month after notice of such Member's request.

8.5 Accounting Decisions. All decisions as to accounting matters, except as expressly provided in this Agreement, shall be made by the Chief Manager. Such decisions must be satisfactory to the Company's accountants.

8.6 Bank Accounts. All funds of the Company shall be deposited in its name at any financial institution approved by the Chief Manager, in such checking and savings accounts or time deposits or certificates of deposit as shall be designated from time to time by the Chief Manager.

8.7 Tax Matters. The Chief Manager is authorized to make any and all elections for federal, state and local tax purposes including, without limitation, any election, if permitted by applicable law: (a) to adjust the basis of Company property pursuant to Code Sections 754, 734(b) and 743(b), or comparable provisions of state or local law, in connection with Transfers of Membership Interests and Company distributions; (b) with the consent of the Members, to extend the statute of limitations for assessment of tax deficiencies against the Members with respect to adjustments to the Company's federal, state or local tax

returns; and (c) to the extent provided in Code Sections 6221 through 6231, to represent the Company and the Members before taxing authorities or courts of competent jurisdiction in tax matters affecting the Company or the Members in their capacities as Members, and to file any tax returns and execute any agreements or other documents relating to or affecting such tax matters, including agreements or other documents that bind the Members with respect to such tax matters or otherwise affect the rights of the Company and the Members. If a Member, the Chief Manager is specifically authorized to act as the "Tax Matters Member" under the Code and in any similar capacity under state or local law.

ARTICLE 9
WITHDRAWAL, DEATH OR BANKRUPTCY OF A MEMBER

9.1 Withdrawal of a Member. No Member shall have the right to voluntarily retire, resign or withdraw from the Company or otherwise voluntarily terminate his membership in the Company without the prior consent of the Members. Any withdrawal or disassociation from the Company by a Member in contravention of the provisions of this Section 9.1 shall be wrongful.

9.2 Expulsion of a Member. The Members shall not have any power or authority to expel any Member for any reason.

9.3 Death, Incompetency or Dissolution of a Member. If a Member who is a natural person dies, or a court of competent jurisdiction adjudges him to be insane or otherwise incompetent to manage his person or his property, the Member's executor, administrator, guardian, conservator or other legal representative may exercise all of the Member's rights for the purpose of settling his estate or administering his property. If a Member who is not a natural person is dissolved or terminated, the rights of that Member may be exercised by its legal representative or successor. Notwithstanding the foregoing, and unless otherwise determined by the Members as provided in Article 10, the executor, administrator, guardian, conservator, successor or other legal representative of a deceased, incompetent, dissolved or terminated Member shall have no Governance Rights, shall not be admitted as a Member of the Company, and shall succeed only to the Financial Rights of such Member. A Member who is not a natural person that is dissolved or terminated shall be deemed to have wrongfully withdrawn from the Company.

9.4 Bankruptcy of a Member. In the event that any Member becomes the subject of a federal or state bankruptcy, insolvency or reorganization proceeding, the Financial Rights of such Member shall not be affected by the existence or conduct of such proceeding, other than as expressly required or provided by law, but such Member shall have no Governance Rights during the pendency of any such proceeding.

9.5 Continuation of the Company. Upon the occurrence of a Withdrawal Event, the existence and business of the Company shall continue without any requirement of action on the part of the remaining Member(s), and the Company

shall not be dissolved unless otherwise determined in accordance with Section 11.2.

9.6 Effect of Withdrawal Event on Member.

(a) Except as expressly provided otherwise in this Agreement, a Member with respect to which a Withdrawal Event has occurred shall immediately lose all Governance Rights and such Member (or his estate, guardian, conservator or other legal representative, as the case may be) shall thereafter be considered merely an assignee of the Financial Rights owned by such Member prior to the occurrence of such Withdrawal Event.

(b) If upon the occurrence of a Withdrawal Event the Company is not dissolved, the Member with respect to which such Withdrawal Event has occurred (or his estate, guardian, conservator or other legal representative, as the case may be) shall not be entitled to any payment or distribution from the Company of any kind, other than the Net Profits, Net Losses and distributions associated with his continuing Financial Rights. By his execution of this Agreement, each Member expressly agrees that his right to continue to share in the Net Profits, Net Losses and distributions of the Company after the occurrence of a Withdrawal Event shall be in lieu of any rights he may then otherwise have under the Act to receive any distribution or payment with respect to his Membership Interest. If, notwithstanding the foregoing, a court of competent jurisdiction determines that a Member (or his estate, guardian, conservator or other legal representative, as the case may be) shall be entitled to a distribution or payment from the Company as a result of such Withdrawal Event, the amount of such distribution or payment shall be reduced and offset to the maximum extent provided under the Act if the withdrawal or disassociation of the Member from the Company is or is deemed to be wrongful under the provisions of this Agreement or the Act.

(c) If upon the occurrence of a Withdrawal Event the Company is dissolved, the Member with respect to which such Withdrawal Event has occurred (or his estate, guardian, conservator or other legal representative, as the case may be) shall share in the proceeds realized upon the dissolution and winding up of the Company as provided in Article 11.

ARTICLE 10
TRANSFER RESTRICTIONS

10.1 Transfer of Membership Interest. Other than as expressly provided in Section 9.3, no Transfer of any part of a Membership Interest shall be made unless all Members (determined, in this case, without reference to the interest of the Member or holder of Financial Rights proposing the Transfer) affirmatively consent to such Transfer. Any purported Transfer of any part of a Membership Interest other than as expressly provided in the preceding sentence shall be null and void, and the Company and the Members shall not be required to recognize

or give effect to any unauthorized Transfer. The foregoing provisions shall be binding upon any permitted transferee of any part of a Membership Interest.

10.2 Admission of Transferee as a Member. In the event that a Member permissibly Transfers any part of his Membership Interest to any person other than another Member, no transferee shall be admitted as a Member or have any right to participate in the management of the business and affairs of the Company as provided in this Agreement unless all the Members (determined, in this case, without reference to the interest of the Member proposing the Transfer) affirmatively consent to such admission. The Members may grant or withhold such consent in their sole and absolute discretion. No transferee of a Membership Interest shall have any right to be admitted as a Member other than as provided in this Section 10.2.

10.3 Rights of Transferee Not Admitted as a Member. In the event that a Member permissibly Transfers any part of his Membership Interest and the transferee is not admitted as a Member, such transferee shall be regarded as a mere assignee of the Financial Rights so transferred, shall have the right to share in the Net Profits, Net Losses and distributions of the Company from and after the effective date of such Transfer, and shall have the right to receive financial information regarding the Company as provided in Section 8.4. The holder of a Membership Interest who has not been admitted as Member shall have no right to participate in the management of the business and affairs of the Company and shall have no right to vote or act on any matter submitted to the Members as provided in this Agreement.

10.4 Transferee to Assume Company Obligations. In the event that, pursuant to Section 10.1, any Member Transfers any part of his Membership Interest to any person or entity other than one or more of the other Members, no such Transfer shall become effective until the proposed transferee: (a) agrees in writing to assume and be bound by all the obligations and restrictions to which the transferor Member is subject under the terms of this Agreement and any further agreement with respect to the business of the Company; and (b) pays all costs and expenses incurred by the Company in connection with such Transfer.

10.5 Transfers By Operation of Law and Attachment. Transfers by operation of law and transfers by levy or attachment pursuant to a judgment or court order shall be subject to the terms and conditions of this Article 10. No judgment creditor may levy upon or attach to the Membership Interest of a Member without the consent of the Members and no distributions hereunder due to a Member shall be made to a judgment creditor of a Member without the unanimous consent of the Members, except as expressly provided by the Act.

ARTICLE 11
TERM, DISSOLUTION, WINDING UP

11.1 Term. The term of the Company shall commence on the date of this Agreement and shall continue until the dissolution and winding up of the Company in accordance with the provisions hereof or as provided by law.

11.2 Events Causing Dissolution and Winding Up. The Company shall be dissolved and its affairs wound up (a) upon the sale of all or substantially all of the assets of the Company and the distribution of the net proceeds therefrom; (b) at any time with the consent of a Majority; or (c) as may be otherwise provided by law. The Company shall be terminated when the winding up of Company affairs has been completed following dissolution.

11.3 Winding Up Affairs on Dissolution. Upon dissolution of the Company, the Chief Manager or the other persons required or permitted by law to carry out the winding up of the affairs of the Company shall (a) promptly notify all Members of such dissolution; (b) wind up the affairs of the Company; (c) prepare and file all instruments or documents required by law to be filed to reflect the dissolution of the Company; and (d) after paying or providing for the payment of all liabilities and obligations of the Company, distribute the assets of the Company as provided by the terms of this Agreement.

11.4 Distribution Upon Dissolution. Upon dissolution of the Company and the sale of its assets, the proceeds of such sale or the assets of the Company shall be allocated as set forth below:

(a) To pay all outstanding liabilities and expenses of the Company;

(b) To establish such reserves for unknown or contingent liabilities as the Chief Manager may determine; and,

(c) To each Member an amount equal to his capital account balance as of the date of dissolution (after giving effect to all contributions and distributions and the allocation of all Net Profits and Net Losses for all periods).

11.5 In-Kind Distributions. In the event it becomes necessary in connection with the dissolution and winding up of the Company to make a distribution of property in kind, such property shall be transferred and conveyed to the Members so as to vest in each of them, as a tenant-in-common, an undivided interest in the whole of such property equal to their interests in the property based upon the amount of cash that would be distributed to each of the Members in accordance with the provisions of Section 11.4 if such property were sold for an amount of cash equal to the fair market value of such property, as determined by the Chief Manager in good faith.

11.6 Waiver of Right to Partition and Decree of Dissolution.

(a) As a material inducement to each Member to execute this Agreement, each Member covenants and represents to each other Member that neither he, nor his heirs, representatives, successors, transferees or assigns, will attempt to make any partition whatever of any interest in any Company assets whether now owned or hereafter acquired, and each

Member waives all rights, if any, of partition provided by statute or principles of law or equity, including partition in kind or partition by sale.

(b) The Members agree that irreparable damage would be done to the goodwill and reputation of the Company if any Member should bring an action in a court to dissolve the Company. The Members agree that there are fair and just provisions for payment and liquidation of the interest of any Member, and fair and just provisions to prevent a Member from selling or otherwise alienating his interest in the Company. Accordingly, each Member hereby waives and renounces his right to such a court decree of dissolution or to seek the appointment by court of a liquidator or receiver for the Company.

ARTICLE 12
GENERAL PROVISIONS

12.1 Notices. Except as expressly provided in this Agreement, all notices, consents, waivers, directions, requests, votes or other instruments or communications required or allowed under the terms of this Agreement shall be in writing, signed by the party giving the same, and shall be deemed properly given three (3) business days after mailing if sent by registered or certified United States mail, postage prepaid, addressed:

(a) in the case of the Company, to the address set forth in Section 2.3;

(b) in the case of any Member, to the address set forth on Exhibit A hereto;

or to such address as any party may specify in writing to the other parties. Notices may be delivered by hand or by commercial courier to the above addresses and shall be deemed properly given upon actual delivery.

12.2 Integration. This Agreement embodies the entire agreement and understanding among the Members and supersedes all prior agreements and understandings, if any, among and between the Members relating to the subject matter hereof.

12.3 Applicable Law. This Agreement and the rights of the Members shall be governed by and construed and enforced in accordance with the laws of the State of Tennessee.

12.4 Severability. In case any one or more of the provisions contained in this Agreement or any application thereof shall be invalid, illegal or unenforceable in any respect, the validity, legality and enforceability of the remaining provisions contained herein and any other application thereof shall not in any way be affected or impaired thereby.

12.5 Binding Effect. Except as otherwise provided herein to the contrary, this Agreement shall be binding upon, and inure to the benefit of, the Members and their respective heirs, executors, administrators, successors, transferees and assigns.

12.6 Terminology. All personal pronouns used in this Agreement, whether used in the masculine, feminine or neuter gender, shall include all other genders; and the singular shall include the plural, and vice versa. Titles and Articles are for convenience only and neither limit nor amplify the provisions of this Agreement itself.

12.7 Amendment. This Agreement may be amended, modified or supplemented only by a writing executed by each of the Members; provided, however, that the Chief Manager shall have the power and authority to amend Exhibit A hereto to reflect any permitted Transfer of all or any part of any Membership Interest.

12.8 Counterparts. This Agreement may be executed in multiple counterparts, each of which shall be deemed an original for all purposes and all of which shall be deemed, collectively, one agreement.

IN WITNESS WHEREOF, this Agreement is executed and shall be effective as of the date first set forth above.

MEMBERS:

_____
Jonathan's Grille Holdco, LLC

Name: Mason Revelette

Title: Member/Manager/CEO

Date: August ____, 2025

EXHIBIT A

Membership

Name:	Percentage Interest:	Initial Capital Contribution:
Jonathan's Grille Holdco, LLC	100%	